No. PF-18BB

TCM®

PARTS CATALOGUE

FORKLIFT TRUCK

GAS & DIESEL POWERED

FG10C19 FD10C19
FG10T19 FD10T19
FG15C19 FD15C19
FG15T19 FD15T19
FG18C19 FD18C19
FG18T19 FD18T19

TCM CORPORATION

ご使用のまえに

このパーツカタログは，TCM フォークリフトの構成部品を収録しています。

部品ご注文について

部品ご注文の際は，必ず車両の形式・仕様・製造番号（号車），部品番号および注文数を明示してください。車両の製造番号（号車）は車両銘板に表示しています。

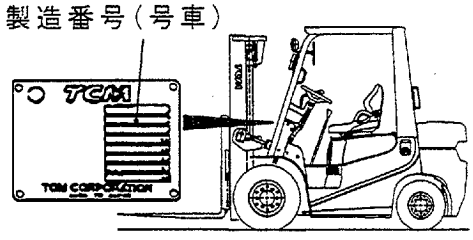

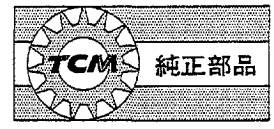

部品は，必ず「TCM 純正部品」をご使用ください。
純正部品以外の部品をご使用になり，故障が発生した場合は保証できません。

ご使用について

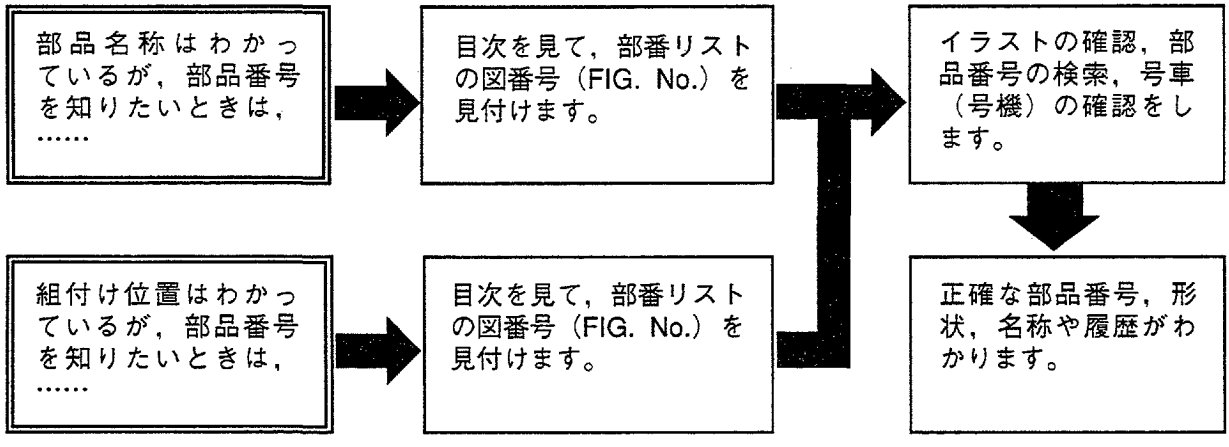

略語および記号

ＡＳＳＹ	組立品を示します。
ＲＨ	車両の前方向に向かって右側を示します。
ＬＨ	車両の前方向に向かって左側を示します。
ＡＲ	必要に応じた数を使用します。
＊	セットおよびキットの販売部品を示します。
Ｔ	厚みを示します。
＋	図示していません。
＃	単体販売しません。

部品は，品質向上のため予告なく変更することがありますので，あらかじめご了承ください。
詳細は，TCM 指定整備工場にご相談ください。

INTRODUCTION

This Parts Catalogue contains the component parts of the **TCM FORKLIFT TRUCK**.

How to order parts

When ordering, be sure to specify the model name, specification and serial number (machine number) of your machine, as well as the part number and desired quantity for each part. The machine serial number (machine number) is indicated on the machine name plate.

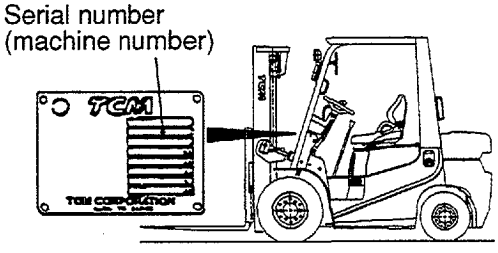

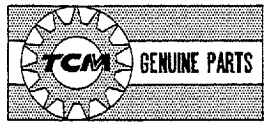

Always use "TCM's Genuine Parts". We cannot guarantee any loss or trouble attributable to other parts than ours.

How to use the Parts Catalogue

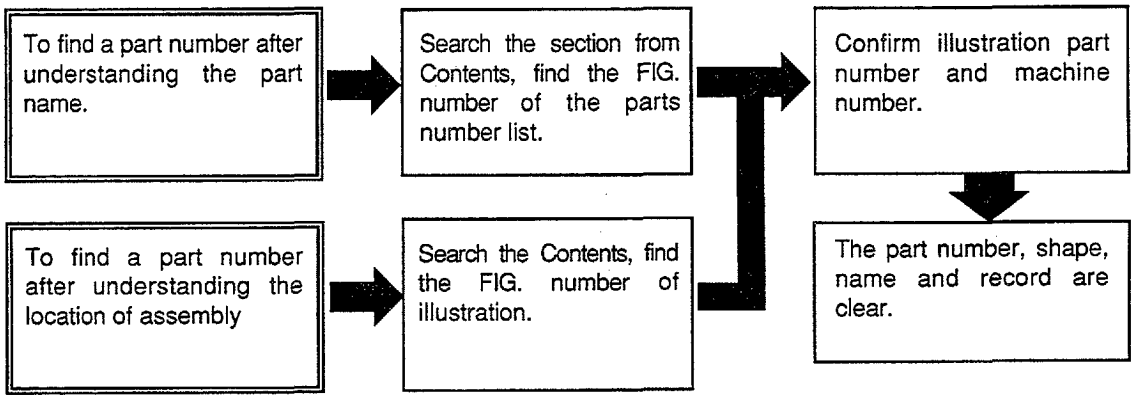

Abbreviations and symbols

ASSY ···	Assembled unit.
RH ·····	Right-hand when viewed forward on the truck.
LH ·····	Left-hand when viewed forward on the truck.
AR ·····	Quantity required.
* ·····	The marketable part set or kit.
T ·····	Thickness.
+ ·····	Not illustrated.
# ·····	Not sold separately.

Materals and specifications subject to change without notice.

CONTENTS 目次

CHASSIS シャーシ

A	FG10C19	D	FG15T19	G	FD10C19	J	FD15T19
B	FG10T19	E	FG18C19	H	FD10T19	K	FD18C19
C	FG15C19	F	FG18T19	I	FD15C19	L	FD18T19

SECTION 部門	A	B	C	D	E	F	G	H	I	J	K	L	FIG. NO.
ENGINE MOUNT (G-TYPE) ｴﾝｼﾞﾝﾏｳﾝﾄ	○	○	○	○	○	○							1
ENGINE MOUNT (D-TYPE) ｴﾝｼﾞﾝﾏｳﾝﾄ							○	○	○	○	○	○	2
AIR CLEANER (G-TYPE) ｴｱｰｸﾘｰﾅ	○	○	○	○	○	○							3
AIR CLEANER (D-TYPE) ｴｱｰｸﾘｰﾅ							○	○	○	○	○	○	4
AIR DUCT (G-TYPE) ｴｱｰﾀﾞｸﾄ	○	○	○	○	○	○							5
AIR DUCT (D-TYPE) ｴｱｰﾀﾞｸﾄ							○	○	○	○	○	○	6
PRE CLEANER [CAKB] ﾌﾟﾚｸﾘｰﾅ	○	○	○	○	○	○	○	○	○	○	○	○	7
COOLING UNIT (G-TYPE) ｸｰﾘﾝｸﾞﾕﾆｯﾄ	○	○	○	○	○	○							8
COOLING UNIT (D-TYPE) ｸｰﾘﾝｸﾞﾕﾆｯﾄ							○	○	○	○	○	○	9
RADIATOR PARTS & RESERVE TANK ﾗｼﾞｴｰﾀﾊﾟｰﾂ&ﾘｻﾞｰﾌﾞﾀﾝｸ	○	○	○	○	○	○	○	○	○	○	○	○	10
DUST SCREEN [DSR006][DSR008] ﾀﾞｽﾄｽｸﾘｰﾝ	○	○	○	○	○	○	○	○	○	○	○	○	11
FUEL SYSTEM (G-TYPE) ﾌｭｰｴﾙｼｽﾃﾑ	○	○	○	○	○	○							12
FUEL SYSTEM (D-TYPE) ﾌｭｰｴﾙｼｽﾃﾑ							○	○	○	○	○	○	13
EXHAUST SYSTEM (G-TYPE) ｴｷｿﾞｰｽﾄｼｽﾃﾑ	○	○	○	○	○	○							14
EXHAUST SYSTEM (D-TYPE) ｴｷｿﾞｰｽﾄｼｽﾃﾑ							○	○	○	○	○	○	15
POST & TAIL [TUE] ﾎﾟｽﾄ&ﾃｲﾙ	○	○	○	○	○	○	○	○	○	○	○	○	16
COMBINATION METER (G-TYPE) ｺﾝﾋﾞﾈｰｼｮﾝﾒｰﾀ	○	○	○	○	○	○							17
COMBINATION METER (D-TYPE) ｺﾝﾋﾞﾈｰｼｮﾝﾒｰﾀ							○	○	○	○	○	○	18
STEERING SHAFT COVER (C-TYPE) ｽﾃｱﾘﾝｸﾞｼｬﾌﾄｶﾊﾞｰ	○		○		○		○		○		○		19
STEERING SHAFT COVER (T-TYPE) ｽﾃｱﾘﾝｸﾞｼｬﾌﾄｶﾊﾞｰ		○		○		○		○		○		○	20
ELECTRIC PARTS (1/2)(G-TYPE) ｴﾚｸﾄﾘｯｸﾊﾟｰﾂ(1/2)	○	○	○	○	○	○							21

CONTENTS 目次

CHASSIS シャーシ

A	FG10C19	D	FG15T19	G	FD10C19	J	FD15T19
B	FG10T19	E	FG18C19	H	FD10T19	K	FD18C19
C	FG15C19	F	FG18T19	I	FD15C19	L	FD18T19

SECTION 部門	A	B	C	D	E	F	G	H	I	J	K	L	FIG. NO.
ELECTRIC PARTS (1/2)(D-TYPE) エレクトリックパーツ(1/2)							O	O	O	O	O	O	22
ELECTRIC PARTS (2/2)(G-TYPE) エレクトリックパーツ(2/2)	O	O	O	O	O	O							23
ELECTRIC PARTS (2/2)(D-TYPE) エレクトリックパーツ(2/2)							O	O	O	O	O	O	24
LIGHT UNIT ライトユニット	O	O	O	O	O	O	O	O	O	O	O	O	25
LICENSE LIGHT ライセンスライト	O	O	O	O	O	O	O	O	O	O	O	O	26
REAR WORKING LIGHT [RWLR] リヤーワーキングライト	O	O	O	O	O	O	O	O	O	O	O	O	27
REAR WORKING LIGHT [RWLL] リヤーワーキングライト	O	O	O	O	O	O	O	O	O	O	O	O	28
REAR WORKING LIGHT [RWL2] リヤーワーキングライト	O	O	O	O	O	O	O	O	O	O	O	O	29
REVOLVING LIGHT [RLY][RLR] リボルビングライト	O	O	O	O	O	O	O	O	O	O	O	O	30
BACK BUZZER バックブザー	O	O	O	O	O	O	O	O	O	O	O	O	31
HEATER UNIT [HR] ヒータユニット	O	O	O	O	O	O	O	O	O	O	O	O	32
HEATER VALVE & ELBOW (G-TYPE):[HR] ヒータバルブ&エルボ	O	O	O	O	O	O							33
HEATER VALVE & ELBOW (D-TYPE):[HR] ヒータバルブ&エルボ							O	O	O	O	O	O	34
SPOT LIGHT [SPL] スポットライト	O	O	O	O	O	O	O	O	O	O	O	O	35
FAN [FAN] ファン	O	O	O	O	O	O	O	O	O	O	O	O	36
AMMETER [AM] アンメータ	O	O	O	O	O	O	O	O	O	O	O	O	37
SPEED METER [SM] スピードメータ	O	O	O	O	O	O	O	O	O	O	O	O	38
TORQUE CONVERTER THERMOMETER [TTM] トルクコンバータサーモメータ		O		O		O		O		O		O	39
TORQUE CONVERTER PRESSURE METER [TPM] トルクコンバータプレッシャメータ		O		O		O		O		O		O	40
SPEED DETECTOR UNIT [SAS] スピードディテクタユニット	O	O	O	O	O	O	O	O	O	O	O	O	41
SPEED ALARM SYSTEM [SASB] スピードアラームシステム	O	O	O	O	O	O	O	O	O	O	O	O	42

CONTENTS 目次

CHASSIS シャーシ

A	FG10C19	D	FG15T19	G	FD10C19	J	FD15T19
B	FG10T19	E	FG18C19	H	FD10T19	K	FD18C19
C	FG15C19	F	FG18T19	I	FD15C19	L	FD18T19

SECTION 部門	A	B	C	D	E	F	G	H	I	J	K	L	FIG. NO.
SPEED ALARM SYSTEM [SASR] ｽﾋﾟｰﾄﾞｱﾗｰﾑｼｽﾃﾑ	○	○	○	○	○	○	○	○	○	○	○	○	43
SPEED ALARM SYSTEM [SASC] ｽﾋﾟｰﾄﾞｱﾗｰﾑｼｽﾃﾑ	○	○	○	○	○	○	○	○	○	○	○	○	44
OK MONITOR [OKM] OKﾓﾆﾀ	○	○	○	○	○	○	○	○	○	○	○	○	45
DRIVE UNIT MOUNT (C-TYPE) ﾄﾞﾗｲﾌﾞﾕﾆｯﾄﾏｳﾝﾄ	○		○		○		○		○		○		46
DRIVE UNIT MOUNT (T-TYPE) ﾄﾞﾗｲﾌﾞﾕﾆｯﾄﾏｳﾝﾄ		○		○		○		○		○		○	47
CLUTCH (C-TYPE) ｸﾗｯﾁ	○		○		○		○		○		○		48
MISSION CASE (C-TYPE) ﾐｯｼｮﾝｹｰｽ	○		○		○		○		○		○		49
MISSION GEAR (C-TYPE) ﾐｯｼｮﾝｷﾞｱｰ	○		○		○		○		○		○		50
TORQUE CONVERTER CASE (T-TYPE) ﾄﾙｸｺﾝﾊﾞｰﾀｹｰｽ		○		○		○		○		○		○	51
CHARGING PUMP (T-TYPE) ﾁｬｰｼﾞﾝｸﾞﾎﾟﾝﾌﾟ		○		○		○		○		○		○	52
MISSION CASE (T-TYPE) ﾐｯｼｮﾝｹｰｽ		○		○		○		○		○		○	53
CLUTCH PACK (T-TYPE) ｸﾗｯﾁﾊﾟｯｸ		○		○		○		○		○		○	54
CONTROL VALVE (T-TYPE) ｺﾝﾄﾛｰﾙﾊﾞﾙﾌﾞ		○		○		○		○		○		○	55
INCHING VALVE (T-TYPE) ｲﾝﾁﾝｸﾞﾊﾞﾙﾌﾞ		○		○		○		○		○		○	56
REDUCTION ﾘﾀﾞｸｼｮﾝ	○	○	○	○	○	○	○	○	○	○	○	○	57
DIFFERENTIAL ﾃﾞｨﾌｧﾚﾝｼｬﾙ	○	○	○	○	○	○	○	○	○	○	○	○	58
DRIVE AXLE ﾄﾞﾗｲﾌﾞｱｸｽﾙ	○	○	○	○	○	○	○	○	○	○	○	○	59
WHEEL BRAKE ﾎｲｰﾙﾌﾞﾚｰｷ	○	○	○	○	○	○	○	○	○	○	○	○	60
STEERING WHEEL UNIT ｽﾃｱﾘﾝｸﾞﾎｲｰﾙﾕﾆｯﾄ	○	○	○	○	○	○	○	○	○	○	○	○	61
STEERING WHEEL UNIT (T-TYPE):[EXN] ｽﾃｱﾘﾝｸﾞﾎｲｰﾙﾕﾆｯﾄ		○		○		○		○		○		○	62
GEAR BOX ｷﾞｱｰﾎﾞｯｸｽ	○	○	○	○	○	○	○	○	○	○	○	○	63

CONTENTS 目次

CHASSIS シャーシ

A	FG10C19	D	FG15T19	G	FD10C19	J	FD15T19
B	FG10T19	E	FG18C19	H	FD10T19	K	FD18C19
C	FG15C19	F	FG18T19	I	FD15C19	L	FD18T19

SECTION 部門	A	B	C	D	E	F	G	H	I	J	K	L	FIG. NO.
GEAR BOX [(EXC,EXE,EXN)/PSS] ｷﾞﾔｰﾎﾞｯｸｽ	○	○	○	○	○	○	○	○	○	○	○	○	64
ORBITROL [EXC][EXE][EXN][OBT][PSO] ｵｰﾋﾞｯﾄﾛｰﾙ	○	○	○	○	○	○	○	○	○	○	○	○	65
DRAG LINK ﾄﾞﾗｯｸﾞﾘﾝｸ	○	○	○	○	○	○	○	○	○	○	○	○	66
STEERING AXLE ｽﾃｱﾘﾝｸﾞｱｸｽﾙ	○	○	○	○	○	○	○	○	○	○	○	○	67
STEERING AXLE [EXC][EXE][EXN][OBT][PSO] ｽﾃｱﾘﾝｸﾞｱｸｽﾙ	○	○	○	○	○	○	○	○	○	○	○	○	68
STEERING AXLE [(EXC,EXE,EXN)/PSS] ｽﾃｱﾘﾝｸﾞｱｸｽﾙ	○	○	○	○	○	○	○	○	○	○	○	○	69
AXLE SUPPORT ｱｸｽﾙｻﾎﾟｰﾄ	○	○	○	○	○	○	○	○	○	○	○	○	70
HUB NUT ﾊﾌﾞﾅｯﾄ	○	○	○	○	○	○	○	○	○	○	○	○	71
FRONT WHEEL (1.0T,1.5T) ﾌﾛﾝﾄﾎｲｰﾙ	○	○	○	○			○	○	○	○			72
FRONT WHEEL (1.8T) ﾌﾛﾝﾄﾎｲｰﾙ					○	○					○	○	73
FRONT WHEEL (1.0T,1.5T):[DR F] ﾌﾛﾝﾄﾎｲｰﾙ	○	○	○	○			○	○	○	○			74
FRONT WHEEL (1.0T,1.5T):[TJ F][TJSF][T F][TS F] ﾌﾛﾝﾄﾎｲｰﾙ	○	○	○	○			○	○	○	○			75
FRONT WHEEL (1.8T):[TJ F][TJSF][T F][TS F] ﾌﾛﾝﾄﾎｲｰﾙ					○	○					○	○	76
FRONT WHEEL (1.0T,1.5T):[(TJ F,TJSF,T F,TS F)/DR F] ﾌﾛﾝﾄﾎｲｰﾙ	○	○	○	○			○	○	○	○			77
FRONT WHEEL (1.0T,1.5T):[TUJF][TUSF][TUWF][TUGF] ﾌﾛﾝﾄﾎｲｰﾙ	○	○	○	○			○	○	○	○			78
FRONT WHEEL (1.8T):[TUJF][TUSF][TUWF][TUGF] ﾌﾛﾝﾄﾎｲｰﾙ					○	○					○	○	79
FRONT WHEEL (1.0T,1.5T):[TUJF/DR F] ﾌﾛﾝﾄﾎｲｰﾙ	○	○	○	○			○	○	○	○			80
FRONT WHEEL (1.0T,1.5T):[TRAF] ﾌﾛﾝﾄﾎｲｰﾙ	○	○	○	○			○	○	○	○			81
FRONT WHEEL (1.8T):[TRAF] ﾌﾛﾝﾄﾎｲｰﾙ					○	○					○	○	82
FRONT WHEEL [TJ W][T W][TS W] ﾌﾛﾝﾄﾎｲｰﾙ	○	○	○	○	○	○	○	○	○	○	○	○	83
FRONT WHEEL [TUJW][TUSW][TUWW][TUGW] ﾌﾛﾝﾄﾎｲｰﾙ	○	○	○	○	○	○	○	○	○	○	○	○	84

CONTENTS 目次

CHASSIS シャーシ

A	FG10C19	D	FG15T19	G	FD10C19	J	FD15T19
B	FG10T19	E	FG18C19	H	FD10T19	K	FD18C19
C	FG15C19	F	FG18T19	I	FD15C19	L	FD18T19

SECTION 部門	A	B	C	D	E	F	G	H	I	J	K	L	FIG. NO.
FRONT WHEEL [TJ W65][TJSW65][T W65][TS W65] フロントホイール	○	○	○	○	○	○	○	○	○	○	○	○	85
FRONT WHEEL [TUJW65][TUSW65][TUWW65][TUGW65] フロントホイール	○	○	○	○	○	○	○	○	○	○	○	○	86
REAR WHEEL リヤーホイール	○	○	○	○	○	○	○	○	○	○	○	○	87
REAR WHEEL [DR R] リヤーホイール	○	○	○	○	○	○	○	○	○	○	○	○	88
REAR WHEEL [TJ R][TJSR][T R][TS R] リヤーホイール	○	○	○	○	○	○	○	○	○	○	○	○	89
REAR WHEEL [(TJ R,TJSR,T R,TS R)/DR R] リヤーホイール	○	○	○	○	○	○	○	○	○	○	○	○	90
REAR WHEEL [TUJR][TUSR][TUWR][TUGR] リヤーホイール	○	○	○	○	○	○	○	○	○	○	○	○	91
REAR WHEEL [TUJR/DR R] リヤーホイール	○	○	○	○	○	○	○	○	○	○	○	○	92
REAR WHEEL [TRAR] リヤーホイール	○	○	○	○	○	○	○	○	○	○	○	○	93
FENDER [DD][SDD] フェンダ゛	○	○	○	○	○	○	○	○	○	○	○	○	94
POWER CYLINDER パ゜ワーシリンダ゛	○	○	○	○	○	○	○	○	○	○	○	○	95
POWER CYLINDER [EXC][EXE][EXN][OBT][PSO] パ゜ワーシリンダ゛	○	○	○	○	○	○	○	○	○	○	○	○	96
POWER CYLINDER [(EXC,EXE,EXN)/PSS] パ゜ワーシリンダ゛	○	○	○	○	○	○	○	○	○	○	○	○	97
POWER CYLINDER BOOT [PSB][FC][RINFC] パ゜ワーシリンダ゛	○	○	○	○	○	○	○	○	○	○	○	○	98
OVERHEAD GUARD オーバ゛ヘッド゛カ゛ード゛	○	○	○	○	○	○	○	○	○	○	○	○	99
OVERHEAD GUARD [EXB][EXC][EXE][EXK][EXN] オーバ゛ヘッド゛カ゛ード゛	○	○	○	○	○	○	○	○	○	○	○	○	100
FRONT PIPE フロントパ゜イプ゜	○	○	○	○	○	○	○	○	○	○	○	○	101
REAR PIPE リヤーパ゜イプ゜	○	○	○	○	○	○	○	○	○	○	○	○	102
REAR PIPE [EXB][EXC][EXE][EXK][EXN] リヤーパ゜イプ゜	○	○	○	○	○	○	○	○	○	○	○	○	103
FRONT LAMP BRACKET フロントランプ゜ブ゜ラケット	○	○	○	○	○	○	○	○	○	○	○	○	104
REAR LAMP BRACKET リヤーランプ゜ブ゜ラケット	○	○	○	○	○	○	○	○	○	○	○	○	105

CONTENTS 目次

CHASSIS シャーシ

A	FG10C19	D	FG15T19	G	FD10C19	J	FD15T19
B	FG10T19	E	FG18C19	H	FD10T19	K	FD18C19
C	FG15C19	F	FG18T19	I	FD15C19	L	FD18T19

SECTION 部門	A	B	C	D	E	F	G	H	I	J	K	L	FIG. NO.
HEAD GUARD PARTS ﾍｯﾄﾞｶﾞｰﾄﾞﾊﾟｰﾂ	○	○	○	○	○	○	○	○	○	○	○	○	106
ACCEL PEDAL (G-TYPE) ｱｸｾﾙﾍﾟﾀﾞﾙ	○	○	○	○	○	○							107
ACCEL PEDAL (D-TYPE) ｱｸｾﾙﾍﾟﾀﾞﾙ							○	○	○	○	○	○	108
FOOT PEDAL (C-TYPE) ﾌｯﾄﾍﾟﾀﾞﾙ	○		○		○		○		○		○		109
FOOT PEDAL (T-TYPE) ﾌｯﾄﾍﾟﾀﾞﾙ		○		○		○		○		○		○	110
FOOT PEDAL (C-TYPE):[PC] ﾌｯﾄﾍﾟﾀﾞﾙ	○		○		○		○		○		○		111
FOOT PEDAL CYLINDER (C-TYPE) ﾌｯﾄﾍﾟﾀﾞﾙｼﾘﾝﾀﾞ	○		○		○		○		○		○		112
FOOT PEDAL CYLINDER (T-TYPE) ﾌｯﾄﾍﾟﾀﾞﾙｼﾘﾝﾀﾞ		○		○		○		○		○		○	113
FOOT PEDAL CYLINDER (C-TYPE):[PC] ﾌｯﾄﾍﾟﾀﾞﾙｼﾘﾝﾀﾞ	○		○		○		○		○		○		114
BRAKE PIPE (C-TYPE) ﾌﾞﾚｰｷﾊﾟｲﾌﾟ	○		○		○		○		○		○		115
BRAKE PIPE (T-TYPE) ﾌﾞﾚｰｷﾊﾟｲﾌﾟ		○		○		○		○		○		○	116
BRAKE PIPE (C-TYPE):[PC] ﾌﾞﾚｰｷﾊﾟｲﾌﾟ	○		○		○		○		○		○		117
FOOT PEDAL COVER ﾌｯﾄﾍﾟﾀﾞﾙｶﾊﾞｰ	○	○	○	○	○	○	○	○	○	○	○	○	118
BRAKE MASTER CYLINDER ﾌﾞﾚｰｷﾏｽﾀｼﾘﾝﾀﾞ	○	○	○	○	○	○	○	○	○	○	○	○	119
BRAKE MASTER CYLINDER ﾌﾞﾚｰｷﾏｽﾀｼﾘﾝﾀﾞ	○	○	○	○	○	○	○	○	○	○	○	○	119A
BRAKE LEVER ﾌﾞﾚｰｷﾚﾊﾞｰ	○	○	○	○	○	○	○	○	○	○	○	○	120
FRAME ﾌﾚｰﾑ	○	○	○	○	○	○	○	○	○	○	○	○	121
OIL TANK ｵｲﾙﾀﾝｸ	○	○	○	○	○	○	○	○	○	○	○	○	122
OIL CAP & LEVEL ｵｲﾙｷｬｯﾌﾟ&ﾚﾍﾞﾙ	○	○	○	○	○	○	○	○	○	○	○	○	123
FUEL TANK (G-TYPE) ﾌｭｰｴﾙﾀﾝｸ	○	○	○	○	○	○							124
FUEL TANK (D-TYPE) ﾌｭｰｴﾙﾀﾝｸ							○	○	○	○	○	○	125

CONTENTS 目次

CHASSIS シャーシ

A	FG10C19	D	FG15T19	G	FD10C19	J	FD15T19
B	FG10T19	E	FG18C19	H	FD10T19	K	FD18C19
C	FG15C19	F	FG18T19	I	FD15C19	L	FD18T19

SECTION 部門	A	B	C	D	E	F	G	H	I	J	K	L	FIG. NO.
BALANCE WEIGHT ﾊﾞﾗﾝｽｳｴｲﾄ	○	○	○	○	○	○	○	○	○	○	○	○	126
BALANCE WEIGHT [HC] ﾊﾞﾗﾝｽｳｴｲﾄ	○	○	○	○	○	○	○	○	○	○	○	○	127
FRONT GUARD ﾌﾛﾝﾄｶﾞｰﾄﾞ	○	○	○	○	○	○	○	○	○	○	○	○	128
BONNET ﾎﾞﾝﾈｯﾄ	○	○	○	○	○	○	○	○	○	○	○	○	129
RADIATOR COVER ﾗｼﾞｴｰﾀｶﾊﾞｰ	○	○	○	○	○	○	○	○	○	○	○	○	130
FLOOR BOARD ﾌﾛｱﾎﾞｰﾄﾞ	○	○	○	○	○	○	○	○	○	○	○	○	131
TRAY ﾄﾚｰ	○	○	○	○	○	○	○	○	○	○	○	○	132
TRAY [AW071][RWL][LPG][LPO][BB SW][BBASW] ﾄﾚｰ	○	○	○	○	○	○	○	○	○	○	○	○	133
TRAY [RWL/LPG][AW071/RWL/LPG] ﾄﾚｰ	○	○	○	○	○	○							134
TRAY [SM][AM][TPM] ﾄﾚｰ	○	○	○	○	○	○	○	○	○	○	○	○	135
TRAY [SM/(LPG,BB SW,BBASW)][SM/(LPG,BB SW,BBASW)/RWL] ﾄﾚｰ	○	○	○	○	○	○	○	○	○	○	○	○	136
TRAY [SM/AW071/RWL] ﾄﾚｰ	○	○	○	○	○	○	○	○	○	○	○	○	137
FRONT GUARD BOOTS [FC] ﾌﾛﾝﾄｶﾞｰﾄﾞﾌﾞｰﾂ	○	○	○	○	○	○	○	○	○	○	○	○	138
SEAT ｼｰﾄ	○	○	○	○	○	○	○	○	○	○	○	○	139
SEAT [EX][SUS001][SETS30/EX] ｼｰﾄ	○	○	○	○	○	○	○	○	○	○	○	○	140
PUMP UNIT (G-TYPE) ﾎﾟﾝﾌﾟﾕﾆｯﾄ	○	○	○	○	○	○							141
PUMP UNIT (D-TYPE) ﾎﾟﾝﾌﾟﾕﾆｯﾄ							○	○	○	○	○	○	142
CONTROL VALVE [2SV] ｺﾝﾄﾛｰﾙﾊﾞﾙﾌﾞ	○	○	○	○	○	○	○	○	○	○	○	○	143
CONTROL VALVE [3SV] ｺﾝﾄﾛｰﾙﾊﾞﾙﾌﾞ	○	○	○	○	○	○	○	○	○	○	○	○	144
CONTROL VALVE [4SV] ｺﾝﾄﾛｰﾙﾊﾞﾙﾌﾞ	○	○	○	○	○	○	○	○	○	○	○	○	145
CONTROL VALVE [5SV] ｺﾝﾄﾛｰﾙﾊﾞﾙﾌﾞ	○	○	○	○	○	○	○	○	○	○	○	○	146

CONTENTS 目次

CHASSIS シャーシ

A	FG10C19	D	FG15T19	G	FD10C19	J	FD15T19
B	FG10T19	E	FG18C19	H	FD10T19	K	FD18C19
C	FG15C19	F	FG18T19	I	FD15C19	L	FD18T19

SECTION 部門	A	B	C	D	E	F	G	H	I	J	K	L	FIG. NO.
INLET SECTION ｲﾝﾚｯﾄｾｸｼｮﾝ	O	O	O	O	O	O	O	O	O	O	O	O	147
SPOOL SECTION (LIFT) ｽﾌﾟｰﾙｾｸｼｮﾝ	O	O	O	O	O	O	O	O	O	O	O	O	148
SPOOL SECTION (TILT) ｽﾌﾟｰﾙｾｸｼｮﾝ	O	O	O	O	O	O	O	O	O	O	O	O	149
SPOOL SECTION [3SV][4SV][5SV] ｽﾌﾟｰﾙｾｸｼｮﾝ	O	O	O	O	O	O	O	O	O	O	O	O	150
CONTROL VALVE FITTING ｺﾝﾄﾛｰﾙﾊﾞﾙﾌﾞﾌｨｯﾃｨﾝｸﾞ	O	O	O	O	O	O	O	O	O	O	O	O	151
VALVE CONTROL [2SV] ﾊﾞﾙﾌﾞｺﾝﾄﾛｰﾙ	O	O	O	O	O	O	O	O	O	O	O	O	152
VALVE CONTROL [3SV] ﾊﾞﾙﾌﾞｺﾝﾄﾛｰﾙ	O	O	O	O	O	O	O	O	O	O	O	O	153
VALVE CONTROL [4SV] ﾊﾞﾙﾌﾞｺﾝﾄﾛｰﾙ	O	O	O	O	O	O	O	O	O	O	O	O	154
VALVE CONTROL [5SV] ﾊﾞﾙﾌﾞｺﾝﾄﾛｰﾙ	O	O	O	O	O	O	O	O	O	O	O	O	155
VALVE CONTROL KNOB ﾊﾞﾙﾌﾞｺﾝﾄﾛｰﾙﾉﾌﾞ	O	O	O	O	O	O	O	O	O	O	O	O	156
HYDRAULIC LINE (MAIN)(1/3)(G-TYPE) ﾊｲﾄﾞﾛﾘｯｸﾗｲﾝ(1/3)	O	O	O	O	O	O							157
HYDRAULIC LINE (MAIN)(1/3)(D-TYPE) ﾊｲﾄﾞﾛﾘｯｸﾗｲﾝ(1/3)							O	O	O	O	O	O	158
HYDRAULIC LINE (MAIN)(2/3) ﾊｲﾄﾞﾛﾘｯｸﾗｲﾝ(2/3)	O	O	O	O	O	O	O	O	O	O	O	O	159
HYDRAULIC LINE (MAIN)(2/3)[EXC][EXE][EXN][OBT][PSO] ﾊｲﾄﾞﾛﾘｯｸﾗｲﾝ(2/3)	O	O	O	O	O	O	O	O	O	O	O	O	160
HYDRAULIC LINE (MAIN)(2/3)[(EXC,EXE,EXN)/PSS] ﾊｲﾄﾞﾛﾘｯｸﾗｲﾝ(2/3)	O	O	O	O	O	O	O	O	O	O	O	O	161
HYDRAULIC LINE (MAIN)(3/3) ﾊｲﾄﾞﾛﾘｯｸﾗｲﾝ(3/3)	O	O	O	O	O	O	O	O	O	O	O	O	162
HYDRAULIC LINE (TOR-CON)(G-TYPE:T-TYPE) ﾊｲﾄﾞﾛﾘｯｸﾗｲﾝ(ﾄﾙｺﾝ)		O		O		O							163
HYDRAULIC LINE (TOR-CON)(D-TYPE:T-TYPE) ﾊｲﾄﾞﾛﾘｯｸﾗｲﾝ(ﾄﾙｺﾝ)								O		O		O	164
TILT CYLINDER ﾃｨﾙﾄｼﾘﾝﾀﾞ	O	O	O	O	O	O	O	O	O	O	O	O	165
TILT BOOTS [TLB][FC] ﾃｨﾙﾄﾌﾞｰﾂ	O	O	O	O	O	O	O	O	O	O	O	O	166
DECAL (1/2) ﾃﾞｶﾙ(1/2)	O	O	O	O	O	O	O	O	O	O	O	O	167

CONTENTS 目次

CHASSIS シャーシ

A	FG10C19	D	FG15T19	G	FD10C19	J	FD15T19
B	FG10T19	E	FG18C19	H	FD10T19	K	FD18C19
C	FG15C19	F	FG18T19	I	FD15C19	L	FD18T19

SECTION 部門	A	B	C	D	E	F	G	H	I	J	K	L	FIG. NO.
DECAL (2/2) ﾃﾞｶﾙ(2/2)	○	○	○	○	○	○	○	○	○	○	○	○	168
DECAL (2/2)[EXB] ﾃﾞｶﾙ(2/2)	○	○	○	○	○	○	○	○	○	○	○	○	169
DECAL (2/2)[EXC] ﾃﾞｶﾙ(2/2)	○	○	○	○	○	○	○	○	○	○	○	○	170
DECAL (2/2)[EXE] ﾃﾞｶﾙ(2/2)	○	○	○	○	○	○	○	○	○	○	○	○	171
DECAL (2/2)[EXK] ﾃﾞｶﾙ(2/2)	○	○	○	○	○	○	○	○	○	○	○	○	172
DECAL (2/2)[EXN] ﾃﾞｶﾙ(2/2)	○	○	○	○	○	○	○	○	○	○	○	○	173
SERVICE TOOLS [TO][EX] ｻｰﾋﾞｽﾂｰﾙ	○	○	○	○	○	○	○	○	○	○	○	○	174
FRONT GLASS [AW071] ﾌﾛﾝﾄｶﾞﾗｽ	○	○	○	○	○	○	○	○	○	○	○	○	175
FRONT GLASS WIPER [AW071] ﾌﾛﾝﾄｶﾞﾗｽ	○	○	○	○	○	○	○	○	○	○	○	○	176
FIRE EXTINGUISHER [FE][FE M] ﾌｧｲﾔｲｸｽﾃｨﾝｸﾞｲｯｼｬ	○	○	○	○	○	○	○	○	○	○	○	○	177

CONTENTS 目次

MAST マスト

A	FG10C19	D	FG15T19	G	FD10C19	J	FD15T19
B	FG10T19	E	FG18C19	H	FD10T19	K	FD18C19
C	FG15C19	F	FG18T19	I	FD15C19	L	FD18T19

SECTION 部門	A	B	C	D	E	F	G	H	I	J	K	L	FIG. NO.
[VM18G]													
FORK [VM18G] フォーク	○	○	○	○			○	○	○	○			178
LIFT BRACKET [VM18G] ﾘﾌﾄﾌﾞﾗｹｯﾄ	○	○	○	○			○	○	○	○			179
BACKREST [VM18G] ﾊﾞｯｸﾚｽﾄ	○	○	○	○			○	○	○	○			180
MAST [VM18G] マスト	○	○	○	○			○	○	○	○			181
LIFT CYLINDER [VM18G] ﾘﾌﾄｼﾘﾝﾀﾞ	○	○	○	○			○	○	○	○			182
MAST PIPING [VM18G] ﾏｽﾄﾊﾟｲﾋﾟﾝｸﾞ	○	○	○	○			○	○	○	○			183
[VM18J]													
FORK [VM18J] フォーク					○	○					○	○	184
LIFT BRACKET [VM18J] ﾘﾌﾄﾌﾞﾗｹｯﾄ					○	○					○	○	185
BACKREST [VM18J] ﾊﾞｯｸﾚｽﾄ					○	○					○	○	186
MAST [VM18J] マスト					○	○					○	○	187
LIFT CYLINDER [VM18J] ﾘﾌﾄﾌﾞﾗｹｯﾄ					○	○					○	○	188
MAST PIPING [VM18J] ﾏｽﾄﾊﾟｲﾋﾟﾝｸﾞ					○	○					○	○	189

CONTENTS 目次

MAST マスト

A	FG10C19	D	FG15T19	G	FD10C19	J	FD15T19
B	FG10T19	E	FG18C19	H	FD10T19	K	FD18C19
C	FG15C19	F	FG18T19	I	FD15C19	L	FD18T19

SECTION 部門	A	B	C	D	E	F	G	H	I	J	K	L	FIG. NO.
[VFM18G]													
MAST[VFM18G] マスト	○	○	○	○	○	○	○	○	○	○	○	○	190
LIFT CYLINDER(FRONT)[VFM18G] ﾘﾌﾄｼﾘﾝﾀﾞｰ(ﾌﾛﾝﾄ)	○	○	○	○	○	○	○	○	○	○	○	○	191
LIFT CYLINDER(REAR)[VFM18G] ﾘﾌﾄｼﾘﾝﾀﾞｰ(ﾘﾔｰ)	○	○	○	○	○	○	○	○	○	○	○	○	192
MAST PIPING[VFM18G] ﾏｽﾄﾊﾟｲﾋﾟﾝｸﾞ	○	○	○	○	○	○	○	○	○	○	○	○	193
LIFT BRACKET[VFM18G] ﾘﾌﾄﾌﾞﾗｹｯﾄ	○	○	○	○	○	○	○	○	○	○	○	○	194
FORK[VFM18G] ﾌｫｰｸ	○	○	○	○	○	○	○	○	○	○	○	○	195
BACKREST[VFM18G] ﾊﾞｯｸﾚｽﾄ	○	○	○	○	○	○	○	○	○	○	○	○	196
[VFHM18G]													
MAST[VFHM18G] マスト	○	○	○	○	○	○	○	○	○	○	○	○	197
TILT GAUGE[TG/VFHM18G] ﾃｨﾙﾄｹﾞｰｼﾞ	○	○	○	○	○	○	○	○	○	○	○	○	198
LIFT CYLINDER(FRONT)[VFHM18G] ﾘﾌﾄｼﾘﾝﾀﾞｰ(ﾌﾛﾝﾄ)	○	○	○	○	○	○	○	○	○	○	○	○	199
LIFT CYLINDER (REAR)[VFHM18G] ﾘﾌﾄｼﾘﾝﾀﾞｰ(ﾘﾔｰ)	○	○	○	○	○	○	○	○	○	○	○	○	200
MAST PIPING[VFHM18G] ﾏｽﾄﾊﾟｲﾋﾟﾝｸﾞ	○	○	○	○	○	○	○	○	○	○	○	○	201
LIFT BRACKET[VFHM18G] ﾘﾌﾄﾌﾞﾗｹｯﾄ	○	○	○	○	○	○	○	○	○	○	○	○	202
FORK[VFHM18G] ﾌｫｰｸ	○	○	○	○	○	○	○	○	○	○	○	○	203
BACKREST[VFHM18G] ﾊﾞｯｸﾚｽﾄ	○	○	○	○	○	○	○	○	○	○	○	○	204

FIG.1 ENGINE MOUNT (G-TYPE)

(F5011010) エンジンマウント

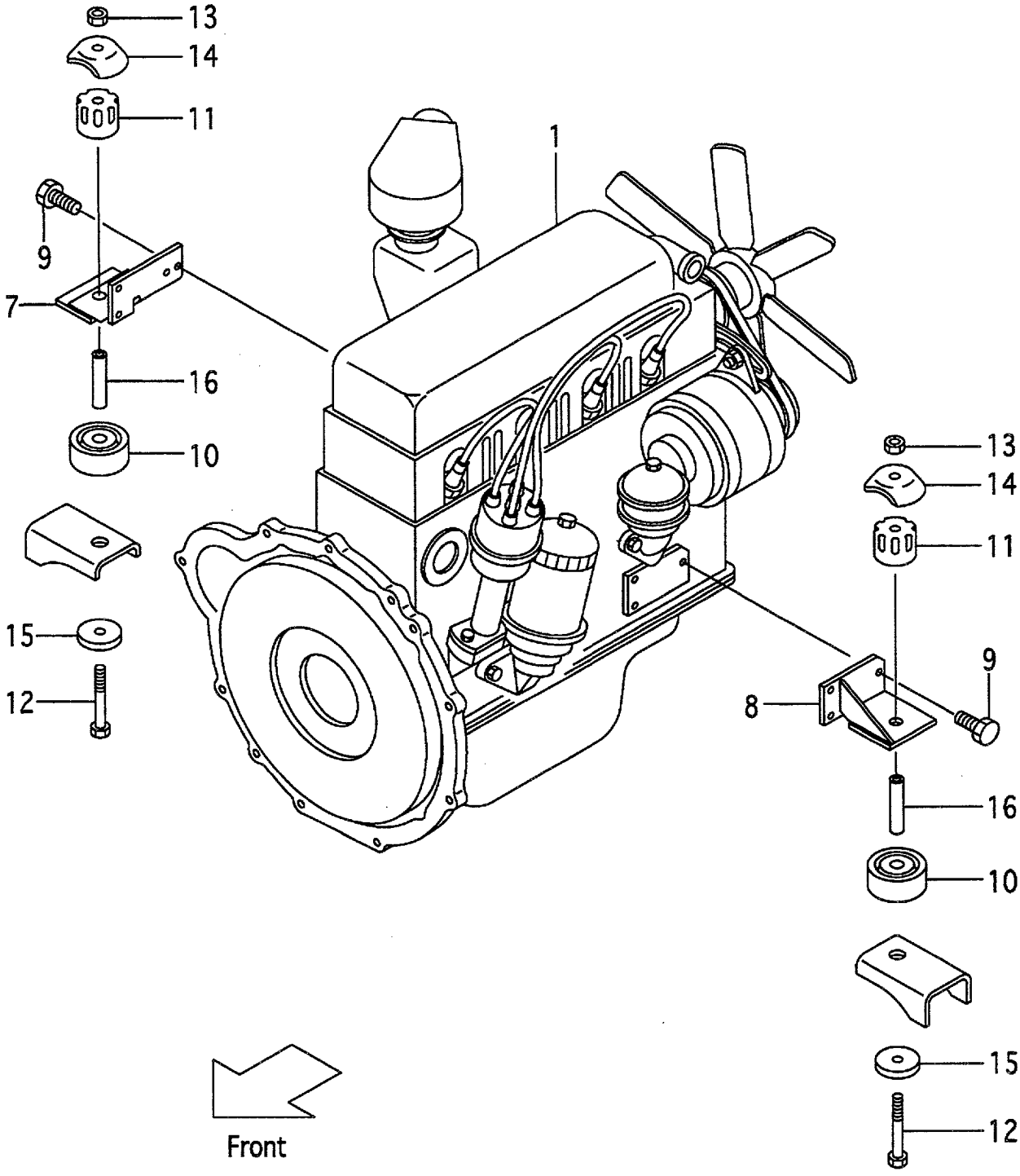

FIG.1
(F5011010)

A:FG10C19 FG10T19 FG15C19 FG15T19 FG18C19 FG18T19

Item No	Part No.	Mark	Description		Req'd	Remarks : Serial No.
1	218G1-00101		ENGINE,H15	ｴﾝｼﾞﾝ	1	
-	518G2-70101		ENGINE,H15	ｴﾝｼﾞﾝ	1	[HCS]
2	01400-00008	+	NUT	ﾅｯﾄ	2	
3	02010-00008	+	WASHER	ﾜｯｼｬ	2	
4	02000-00008	+	WASHER	ﾜｯｼｬ	2	
5	01100-05010	+	BOLT	ﾎﾞﾙﾄ	1	
6	02010-00005	+	WASHER	ﾜｯｼｬ	1	
7	218G1-02351		BRACKET,ENGINE,RH	ﾌﾞﾗｹｯﾄ	1	
8	218G1-02301		BRACKET,ENGINE,LH	ﾌﾞﾗｹｯﾄ	1	
9	01218-10025		BOLT	ﾎﾞﾙﾄ	7	
10	216G1-02111		RUBBER,CUSHION	ﾗﾊﾞｰ	2	
11	214A1-02111		RUBBER,CUSHION	ﾗﾊﾞｰ	2	
12	01103-10097		BOLT	ﾎﾞﾙﾄ	2	
13	23651-02011		NUT	ﾅｯﾄ	2	
14	214A1-02121		CAP	ｷｬｯﾌﾟ	2	
15	23651-02001		PLATE	ﾌﾟﾚｰﾄ	2	
16	234A1-02071		COLLAR	ｶﾗｰ	2	

FIG.2 ENGINE MOUNT (D-TYPE)

(F5011020) エンジンマウント

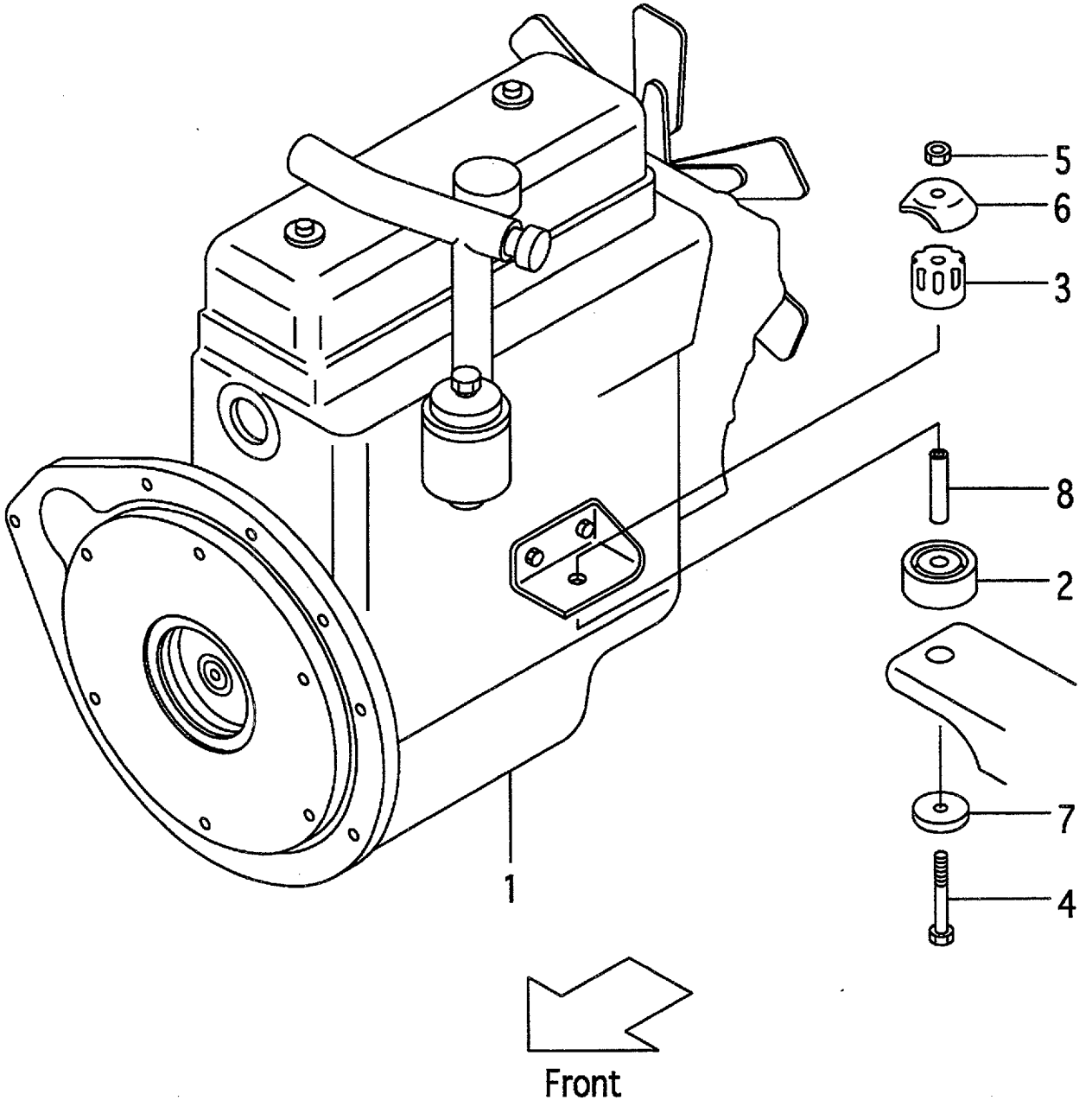

FIG.2
(F5011020)

A:FD10C19 FD10T19 FD15C19 FD15T19 FD18C19 FD18T19

Item No	Part No.	Mark	Description		Req'd	Remarks : Serial No.
1	217G1-00202		ENGINE,4LB1	ｴﾝｼﾞﾝ	1	
2	216G1-02111		RUBBER,CUSHION	ﾗﾊﾞｰ	2	
3	214A1-02111		RUBBER,CUSHION	ﾗﾊﾞｰ	2	
4	01103-10097		BOLT	ﾎﾞﾙﾄ	2	
5	23651-02011		NUT	ﾅｯﾄ	2	
6	214A1-02121		CAP	ｷｬｯﾌﾟ	2	
7	23651-02001		PLATE	ﾌﾟﾚｰﾄ	2	
8	234A1-02071		COLLAR	ｶﾗｰ	2	

FIG.3 AIR CLEANER (G-TYPE)

(F5011030) エアークリーナ

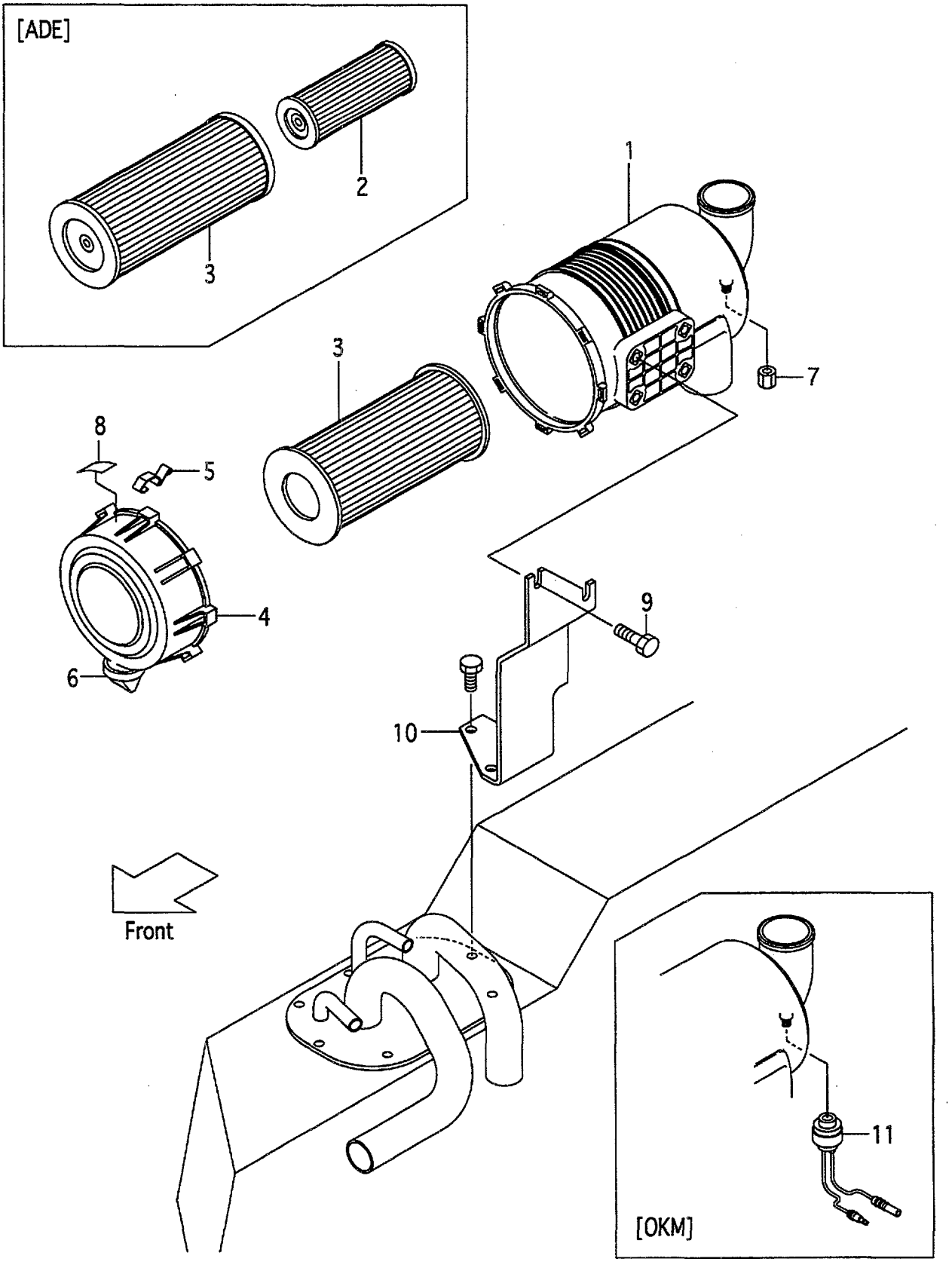

A:FG10C19 FG15C19 FG18C19
B:FG10T19 FG15T19 FG18T19

FIG.3
(F5011030)

Item No	Part No.	Mark	Description		Req'd	Remarks : Serial No.
A1	216G1-02451		CLEANER-ASSY,AIR	ｴｱｰｸﾘｰﾅｱｯｾﾝ	1	INC.1,3-8
-	516G0-60101		CLEANER-ASSY,AIR	ｴｱｰｸﾘｰﾅｱｯｾﾝ	1	[ADE] INC.1-8
1	216G1-02481		BODY	ﾎﾞﾃﾞｨ	1	
2	213T1-02021		ELEMENT,INNER	ｴﾚﾒﾝﾄ	1	[ADE]
3	256C1-08011		ELEMENT,OUTER	ｴﾚﾒﾝﾄ	1	
-	213T1-02011		ELEMENT,OUTER	ｴﾚﾒﾝﾄ	1	[ADE]
4	216G1-02461		COVER	ｶﾊﾞｰ	1	
5	216G1-02471		LATCH	ﾗｯﾁ	3	
6	216G1-02491		VALVE,VACUATOR	ﾊﾞﾙﾌﾞ	1	
7	53651-12551		CAP,NIPPLE	ｷｬｯﾌﾟ	1	
8	216G1-02501		LABEL	ﾗﾍﾞﾙ	1	
-	516G0-62011		LABEL	ﾗﾍﾞﾙ	1	[ADE]
9	01183-08016		BOLT	ﾎﾞﾙﾄ	2	
10	237A1-02101		BRACKET,AIR-CLEANER	ﾌﾞﾗｹｯﾄ	1	
-	237H1-02001		BRACKET,AIR-CLEANER	ﾌﾞﾗｹｯﾄ	1	A [PC]
11	54612-42021		INDICATOR,635MM	ｲﾝｼﾞｹｰﾀ	1	[OKM]

FIG.4 AIR CLEANER (D-TYPE)

(F5011040) エアークリーナ

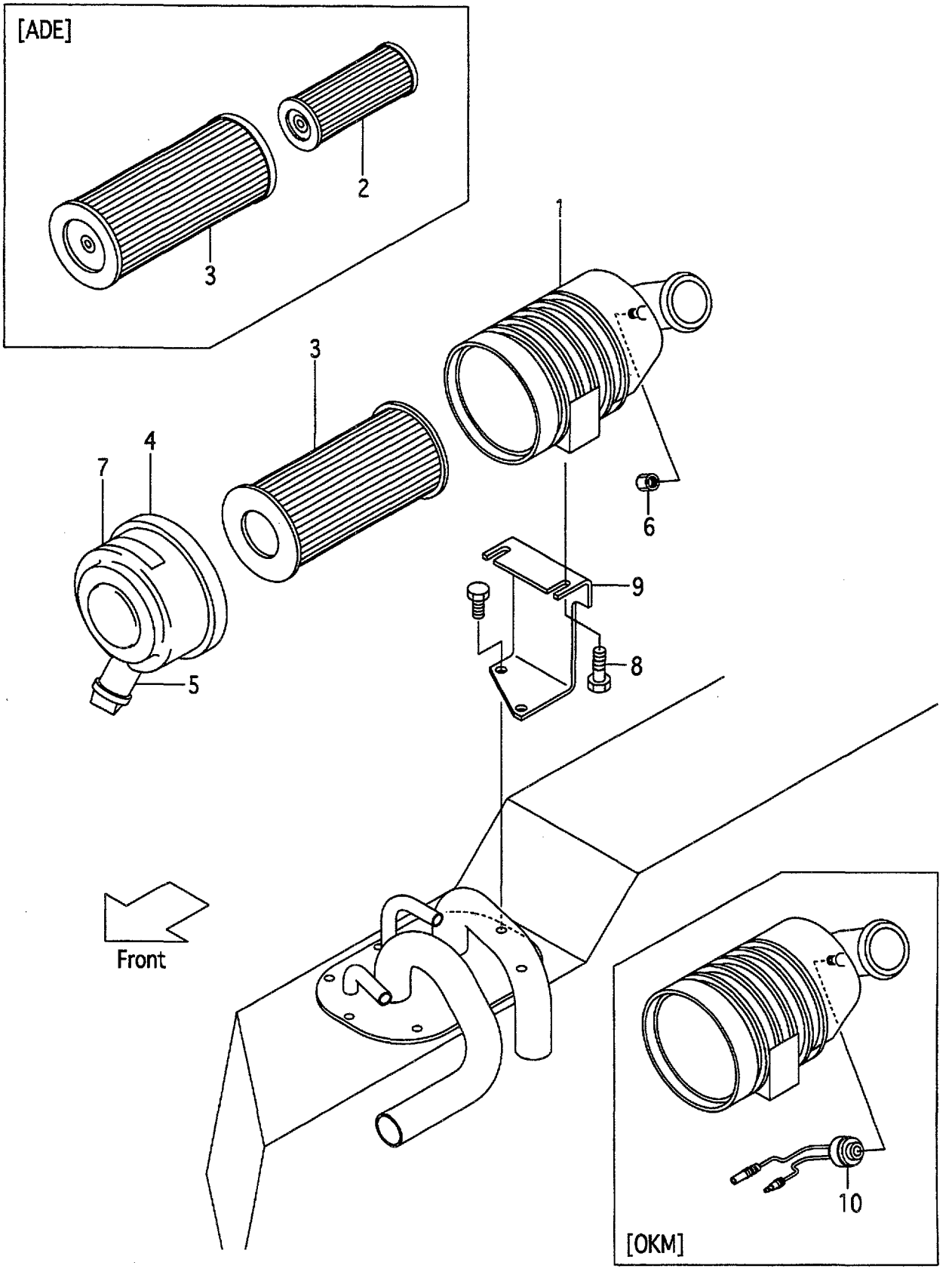

A:FD10C19 FD15C19 FD18C19
B:FD10T19 FD15T19 FD18T19

FIG.4
(F5011040)

Item No	Part No.	Mark	Description		Req'd	Remarks : Serial No.
A1	216G1-02051		CLEANER-ASSY,AIR	ｴｱｰｸﾘｰﾅｱｯｾﾝ	1	INC.1,3-7
-	516G0-60011		CLEANER-ASSY,AIR	ｴｱｰｸﾘｰﾅｱｯｾﾝ	1	[ADE] INC.1-7
1	216G1-02301		BODY	ﾎﾞﾃﾞｨ	1	
-	216G1-02071		BODY	ﾎﾞﾃﾞｨ	1	[ADE]
2	213T1-02021		ELEMENT,INNER	ｴﾚﾒﾝﾄ	1	[ADE]
3	256C1-08011		ELEMENT,OUTER	ｴﾚﾒﾝﾄ	1	
-	213T1-02011		ELEMENT,OUTER	ｴﾚﾒﾝﾄ	1	[ADE]
4	228F1-02211		COVER	ｶﾊﾞｰ	1	
5	256A1-08031		VALVE,VACUATOR	ﾊﾞﾙﾌﾞ	1	
6	53651-12551		CAP,NIPPLE	ｷｬｯﾌﾟ	1	
7	216G1-02311		LABEL	ﾗﾍﾞﾙ	1	
-	516G0-62001		LABEL	ﾗﾍﾞﾙ	1	[ADE]
8	01183-08016		BOLT	ﾎﾞﾙﾄ	2	
9	219M1-02101		BRACKET,AIR-CLEANER	ﾌﾞﾗｹｯﾄ	1	
-	219S1-02001		BRACKET,AIR-CLEANER	ﾌﾞﾗｹｯﾄ	1	A [PC]
10	522A1-10201		INDICATOR,762MM	ｲﾝｼﾞｹｰﾀ	1	[OKM]

FIG.5 AIR DUCT (G-TYPE)

(F5011050) エアーダクト

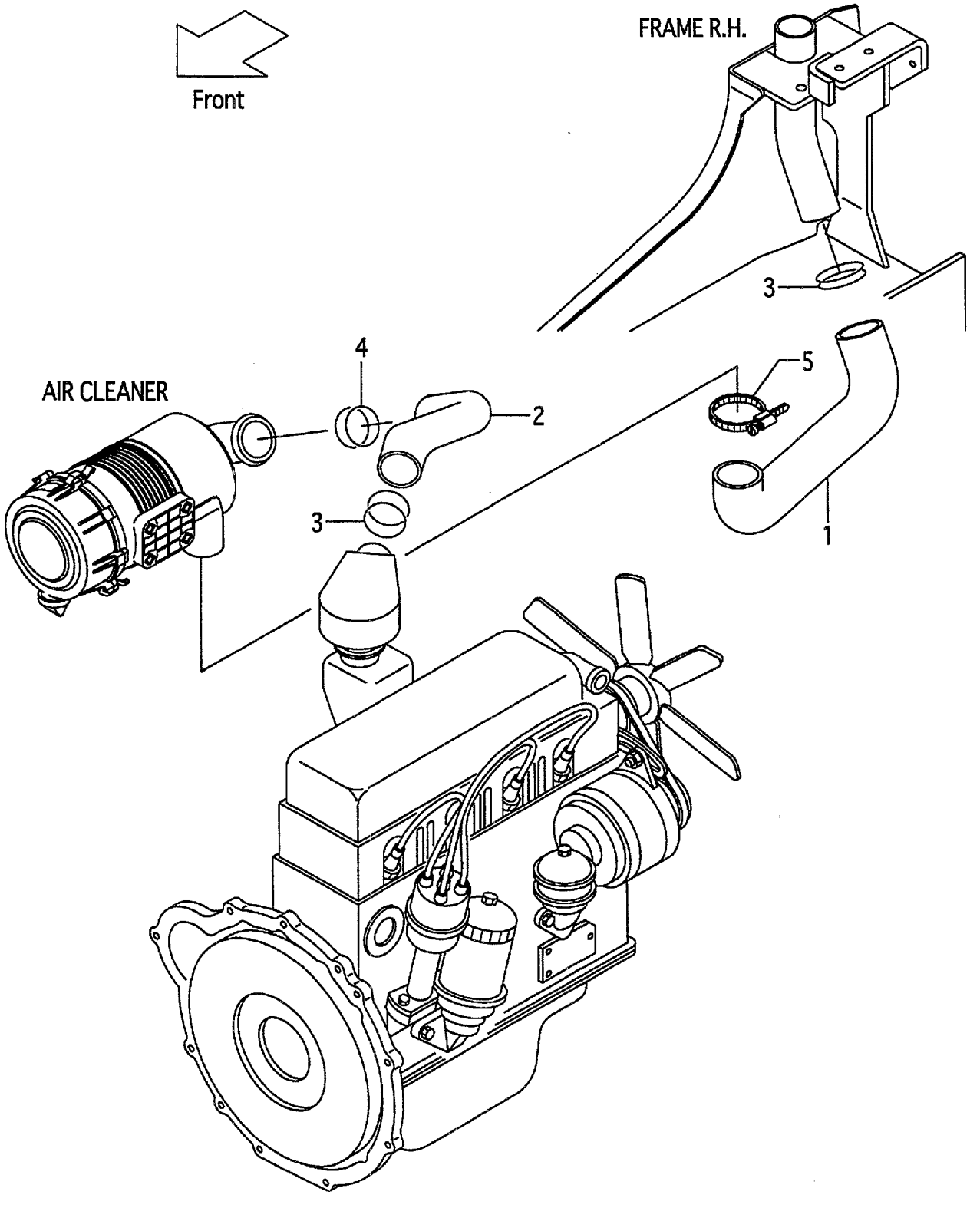

FIG.5
(F5011050)

A:FG10C19 FG10T19 FG15C19 FG15T19 FG18C19 FG18T19

Item No	Part No.	Mark	Description		Req'd	Remarks : Serial No.
1	218G1-02101		HOSE,AIR-DUCT	ﾎｰｽ	1	
2	216G1-02011		HOSE,AIR-INTAKE	ﾎｰｽ	1	
3	04911-00060		CLIP	ｸﾘｯﾌﾟ	2	
4	04911-00065		CLIP	ｸﾘｯﾌﾟ	1	
5	224W4-52071		BAND	ﾊﾞﾝﾄﾞ	1	

FIG.6 AIR DUCT (D-TYPE)

(F5011060) エアーダクト

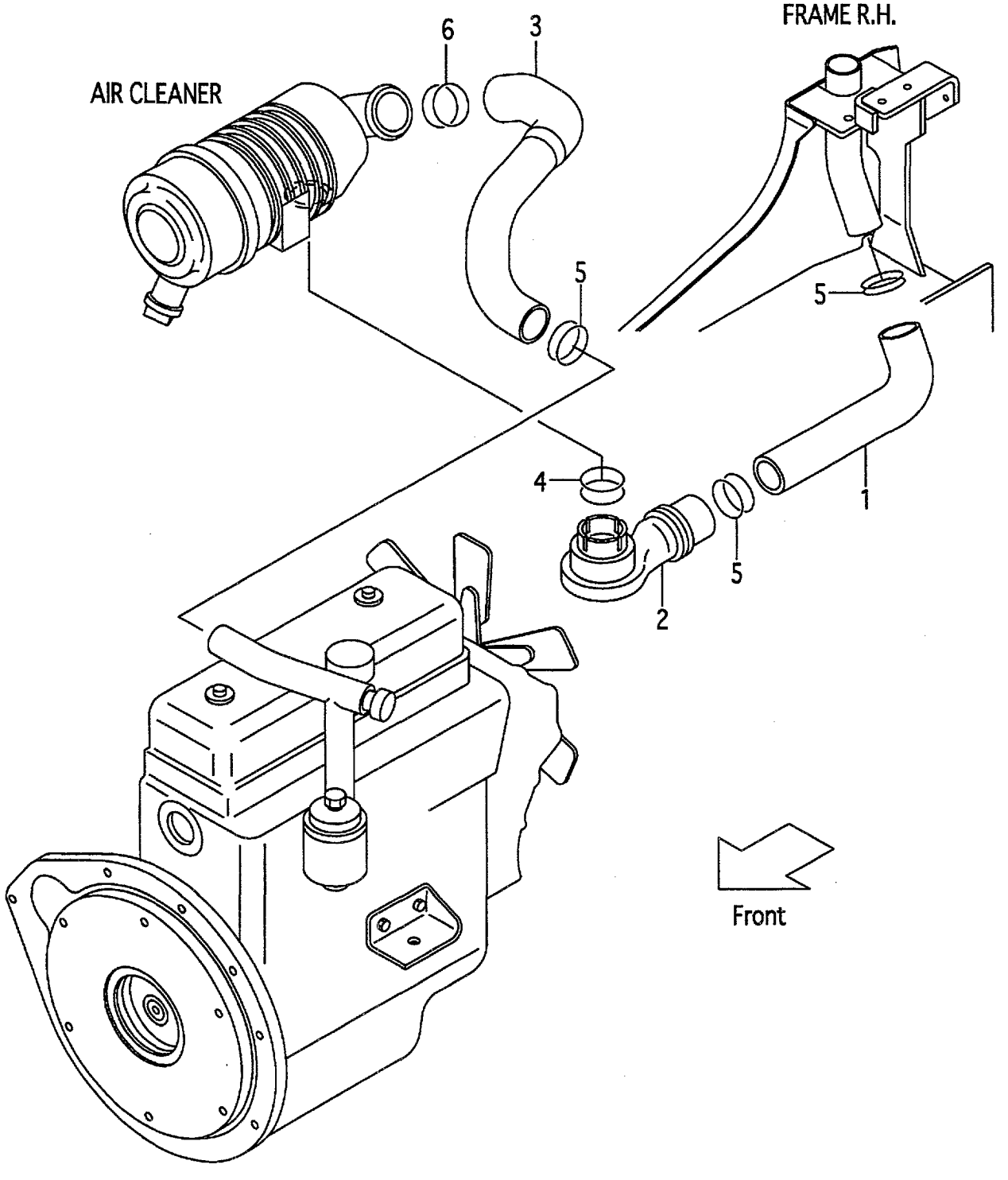

FIG.6
(F5011060)

A:FD10C19 FD10T19 FD15C19 FD15T19 FD18C19 FD18T19

Item No	Part No.	Mark	Description		Req'd	Remarks : Serial No.
1	216G1-02021		HOSE,AIR-DUCT	ﾎｰｽ	1	
2	216G1-02031		INTAKE,AIR	ｲﾝﾃｰｸ	1	
3	217G1-02001		HOSE,AIR-INTAKE	ﾎｰｽ	1	
4	04911-00055		CLIP	ｸﾘｯﾌﾟ	1	
5	04911-00060		CLIP	ｸﾘｯﾌﾟ	3	
6	04911-00065		CLIP	ｸﾘｯﾌﾟ	1	

FIG.7 PRE CLEANER [CAKB]

(F5011070) ﾌﾟﾚｸﾘｰﾅ

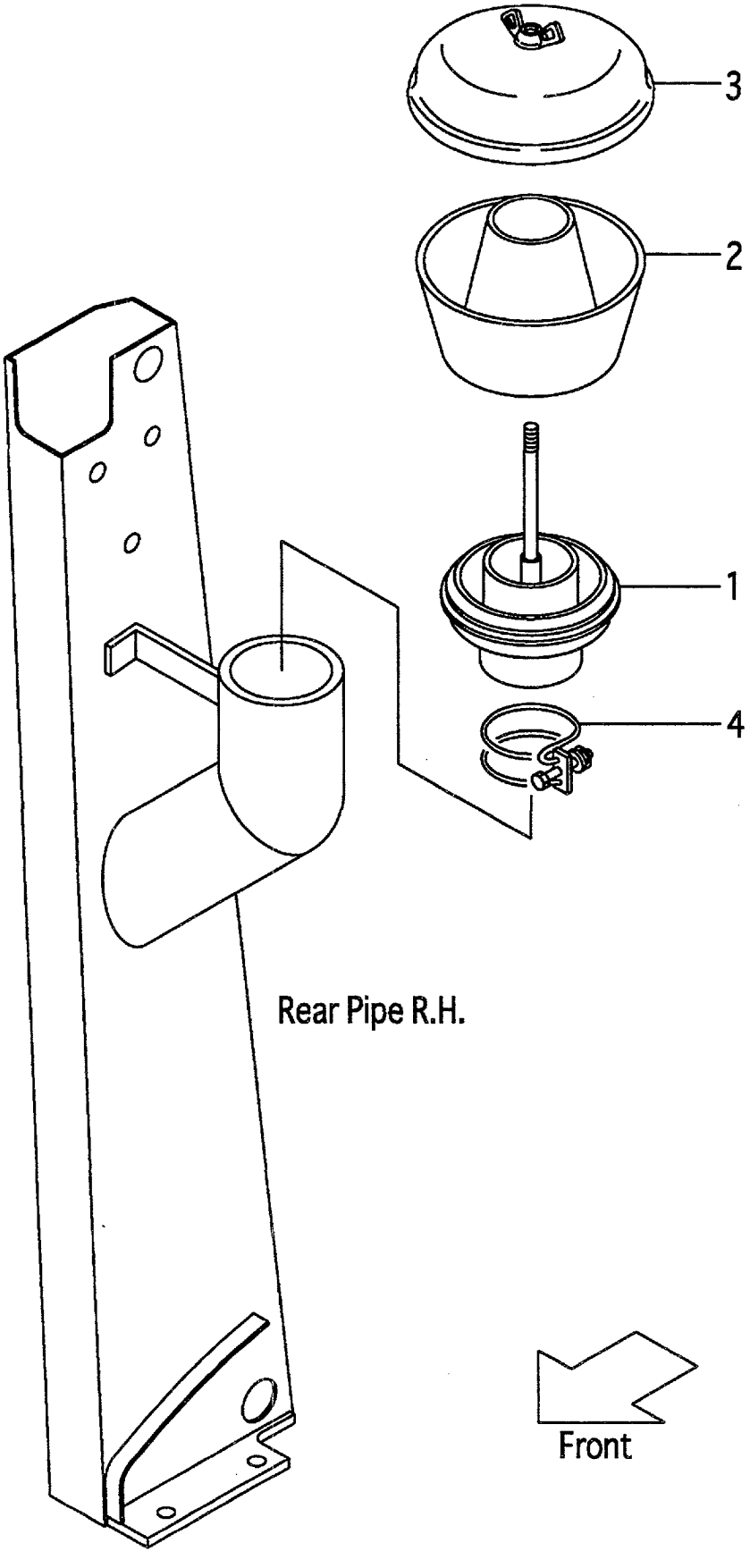

FIG.7

(F5011070)

A:FG10C19 FG10T19 FG15C19 FG15T19 FG18C19 FG18T19
B:FD10C19 FD10T19 FD15C19 FD15T19 FD18C19 FD18T19

Item No	Part No.	Mark	Description		Req'd	Remarks : Serial No.
A1	522B0-92021		PRE-CLEANER-ASSY	ﾌﾟﾚｸﾘｰﾅｱｯｾﾝ	1	[CAKB] INC.1-3
1	522B0-92031		SLEEVE	ｽﾘｰﾌﾞ	1	[CAKB]
2	522B0-92041		BODY	ﾎﾞﾃﾞｨ	1	[CAKB]
3	522B0-92051		COVER	ｶﾊﾞｰ	1	[CAKB]
4	04911-00090		CLIP	ｸﾘｯﾌﾟ	1	[CAKB]

FIG.8 COOLING UNIT (G-TYPE)

(F5012110) クーリングユニット

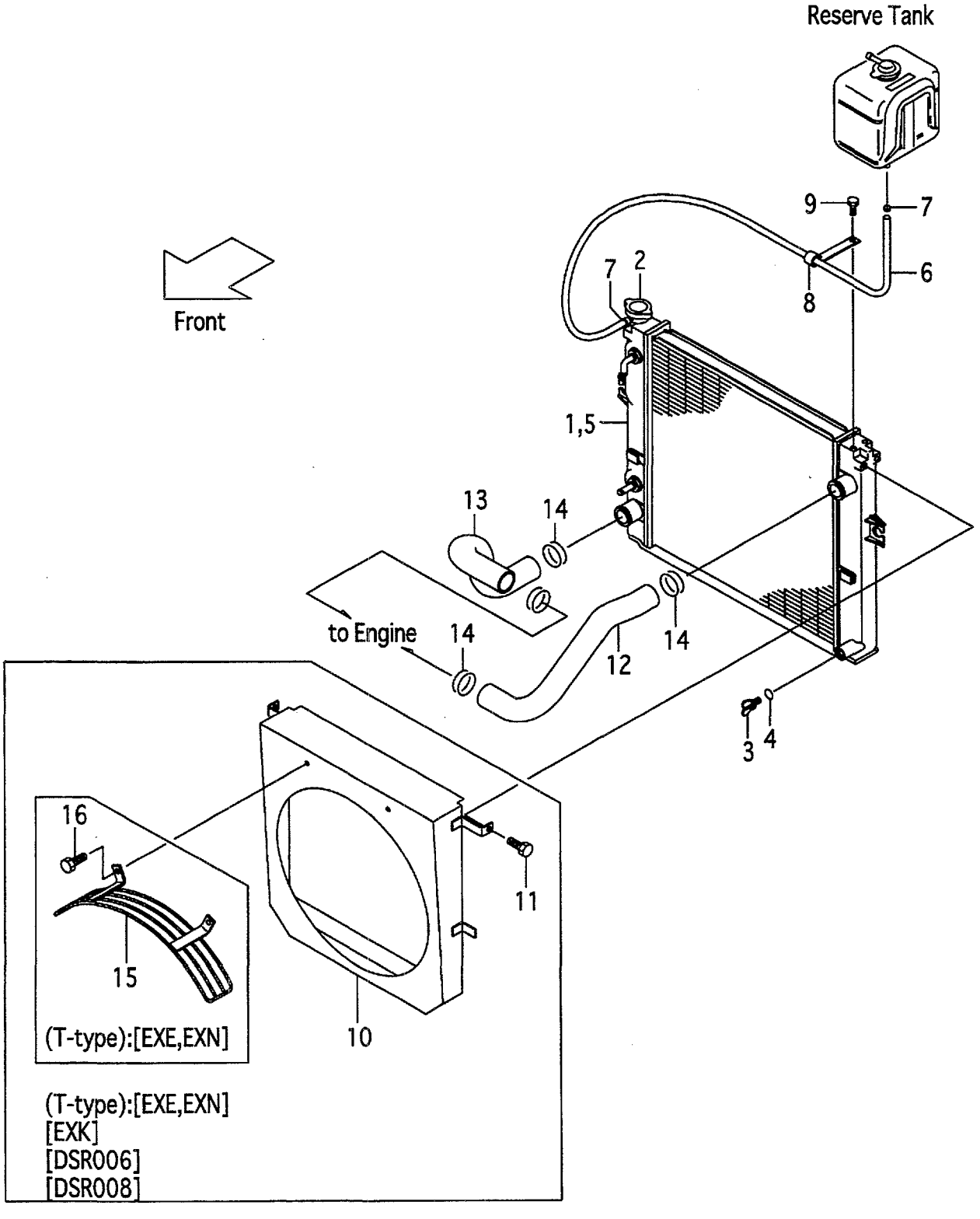

A:FG10C19 FG15C19 FG18C19
B:FG10T19 FG15T19 FG18T19

Item No	Part No.	Mark	Description		Req'd	Remarks : Serial No.
A1	218M2-10101		RADIATOR-ASSY	ﾗｼﾞｴｰﾀｱｯｾﾝ	1	A INC.1-7
-	218N2-10101		RADIATOR-ASSY	ﾗｼﾞｴｰﾀｱｯｾﾝ	1	B INC.1-7
-	518M6-60301		RADIATOR-ASSY	ﾗｼﾞｴｰﾀｱｯｾﾝ	1	A [RADPF][HCS][EXK] INC.1-7
-	518N6-60301		RADIATOR-ASSY	ﾗｼﾞｴｰﾀｱｯｾﾝ	1	B [RADPF][HCS][EXK] INC.1-7
1	NO PART NO.	#	RADIATOR	ﾗｼﾞｴｰﾀ	1	A
-	NO PART NO.	#	RADIATOR	ﾗｼﾞｴｰﾀ	1	B
-	NO PART NO.	#	RADIATOR	ﾗｼﾞｴｰﾀ	1	A [RADPF][HCS][EXK]
-	NO PART NO.	#	RADIATOR	ﾗｼﾞｴｰﾀ	1	B [RADPF][HCS][EXK]
2	222A2-10211		CAP	ｷｬｯﾌﾟ	1	
3	234A2-12201		COCK	ｺｯｸ	1	
4	234A2-12211		O-RING	Oﾘﾝｸﾞ	1	
5	NO PART NO.	#	NUT	ﾅｯﾄ	3	
-	NO PART NO.	#	NUT	ﾅｯﾄ	4	[RADPF][HCS][EXK]
6	218M2-12301		HOSE	ﾎｰｽ	1	
7	23772-12071		CLIP	ｸﾘｯﾌﾟ	2	
8	214A2-42331		CLIP	ｸﾘｯﾌﾟ	1	
9	01185-08016		BOLT	ﾎﾞﾙﾄ	1	
10	218M2-12101		SHROUD,FAN	ｼｭﾗｳﾄﾞ	1	B [EXE][EXN]
-	218M2-12101		SHROUD,FAN	ｼｭﾗｳﾄﾞ	1	[EXK]
-	518M6-52001		SHROUD,FAN	ｼｭﾗｳﾄﾞ	1	[DSR006][DSR008]
11	01185-08016		BOLT	ﾎﾞﾙﾄ	2	B [EXE][EXN]
-	01185-08016		BOLT	ﾎﾞﾙﾄ	2	[EXK][DSR006][DSR008]
12	218G2-12001		HOSE,UPPER	ﾎｰｽ	1	
13	216G2-12021		HOSE,LOWER	ﾎｰｽ	1	
14	04911-00046		CLIP	ｸﾘｯﾌﾟ	4	
15	532B3-82201		GUARD,FAN	ｶﾞｰﾄﾞ	1	B [EXE][EXN]
16	01185-08020		BOLT	ﾎﾞﾙﾄ	2	B [EXE][EXN]

FIG.9 COOLING UNIT (D-TYPE)

(F5012120) クーリング゛ユニット

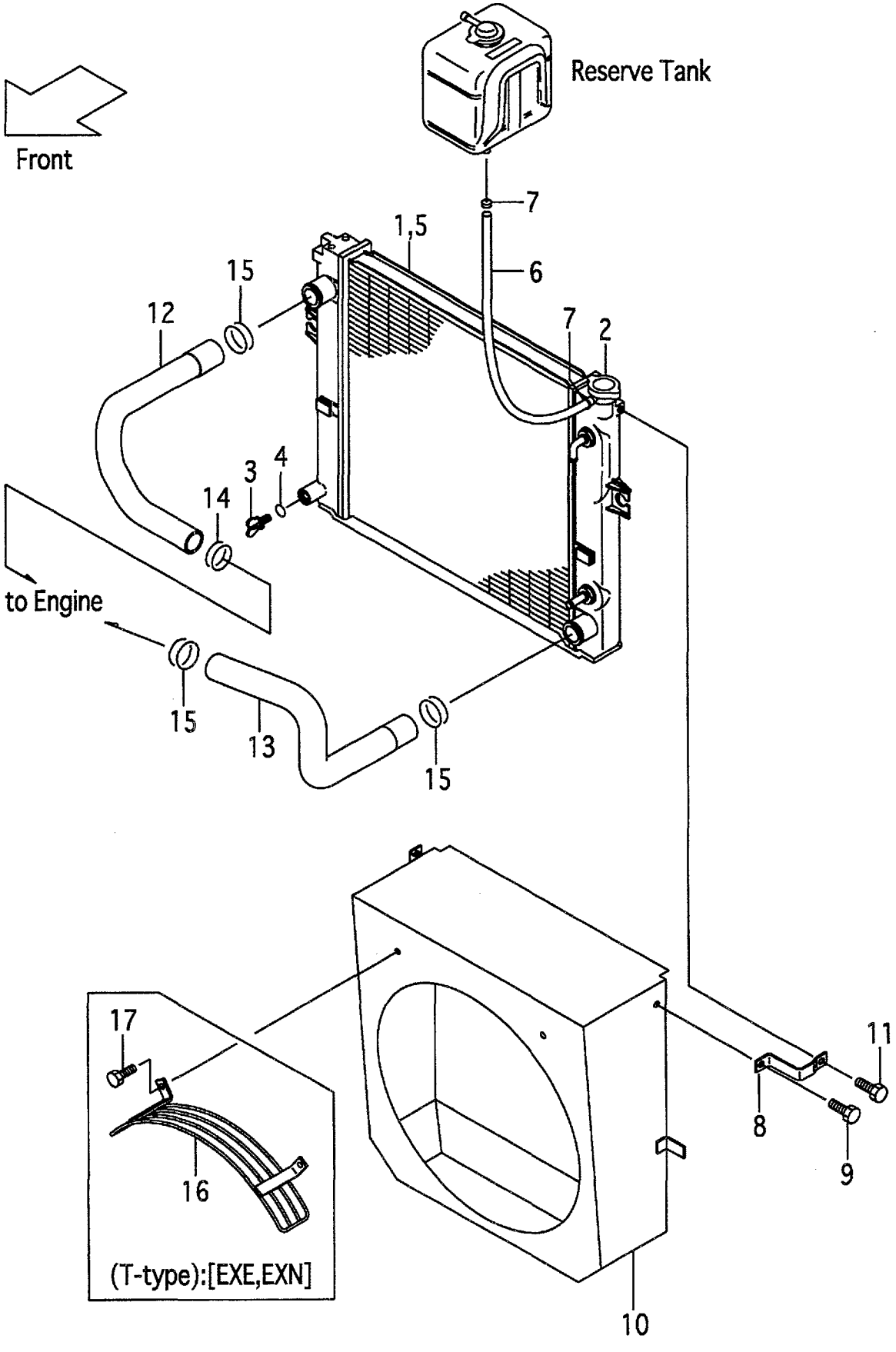

A:FD10C19 FD15C19 FD18C19
B:FD10T19 FD15T19 FD18T19

Item No	Part No.	Mark	Description		Req'd	Remarks : Serial No.
A1	219M2-10101		RADIATOR-ASSY	ﾗｼﾞｴｰﾀｱｯｾﾝ	1	A INC.1-7
-	219N2-10101		RADIATOR-ASSY	ﾗｼﾞｴｰﾀｱｯｾﾝ	1	B INC.1-7
-	519M6-60301		RADIATOR-ASSY	ﾗｼﾞｴｰﾀｱｯｾﾝ	1	A [RADPF][HCS][EXK] INC.1-7
-	519N6-60301		RADIATOR-ASSY	ﾗｼﾞｴｰﾀｱｯｾﾝ	1	B [RADPF][HCS][EXK] INC.1-7
1	NO PART NO.	#	RADIATOR	ﾗｼﾞｴｰﾀ	1	A
-	NO PART NO.	#	RADIATOR	ﾗｼﾞｴｰﾀ	1	B
-	NO PART NO.	#	RADIATOR	ﾗｼﾞｴｰﾀ	1	A [RADPF][HCS][EXK]
-	NO PART NO.	#	RADIATOR	ﾗｼﾞｴｰﾀ	1	B [RADPF][HCS][EXK]
2	222A2-10211		CAP	ｷｬｯﾌﾟ	1	
3	234A2-12201		COCK	ｺｯｸ	1	
4	234A2-12211		O-RING	Oﾘﾝｸﾞ	1	
5	NO PART NO.	#	NUT	ﾅｯﾄ	3	
-	NO PART NO.	#	NUT	ﾅｯﾄ	4	[RADPF][HCS][EXK]
6	219M2-12301		HOSE	ﾎｰｽ	1	
7	23772-12071		CLIP	ｸﾘｯﾌﾟ	2	
8	239A2-12141		BRACKET	ﾌﾞﾗｹｯﾄ	1	
9	01185-08016		BOLT	ﾎﾞﾙﾄ	1	
10	219G2-12201		SHROUD,FAN	ｼｭﾗｳﾄﾞ	1	
-	519G6-52001		SHROUD,FAN	ｼｭﾗｳﾄﾞ	1	[DSR006][DSR008]
11	01185-08016		BOLT	ﾎﾞﾙﾄ	2	
12	219G2-12001		HOSE,UPPER	ﾎｰｽ	1	
13	217G2-12021		HOSE,LOWER	ﾎｰｽ	1	
14	04911-00044		CLIP	ｸﾘｯﾌﾟ	1	
15	04911-00046		CLIP	ｸﾘｯﾌﾟ	3	
16	517H3-82221		GUARD,FAN	ｶﾞｰﾄﾞ	1	B [EXE][EXN]
17	01185-08020		BOLT	ﾎﾞﾙﾄ	2	B [EXE][EXN]

FIG.10 RADIATOR PARTS & RESERVE TANK

(F5012130) ﾗｼﾞｴｰﾀﾊﾟｰﾂ&ﾘｻﾞｰﾌﾞﾀﾝｸ

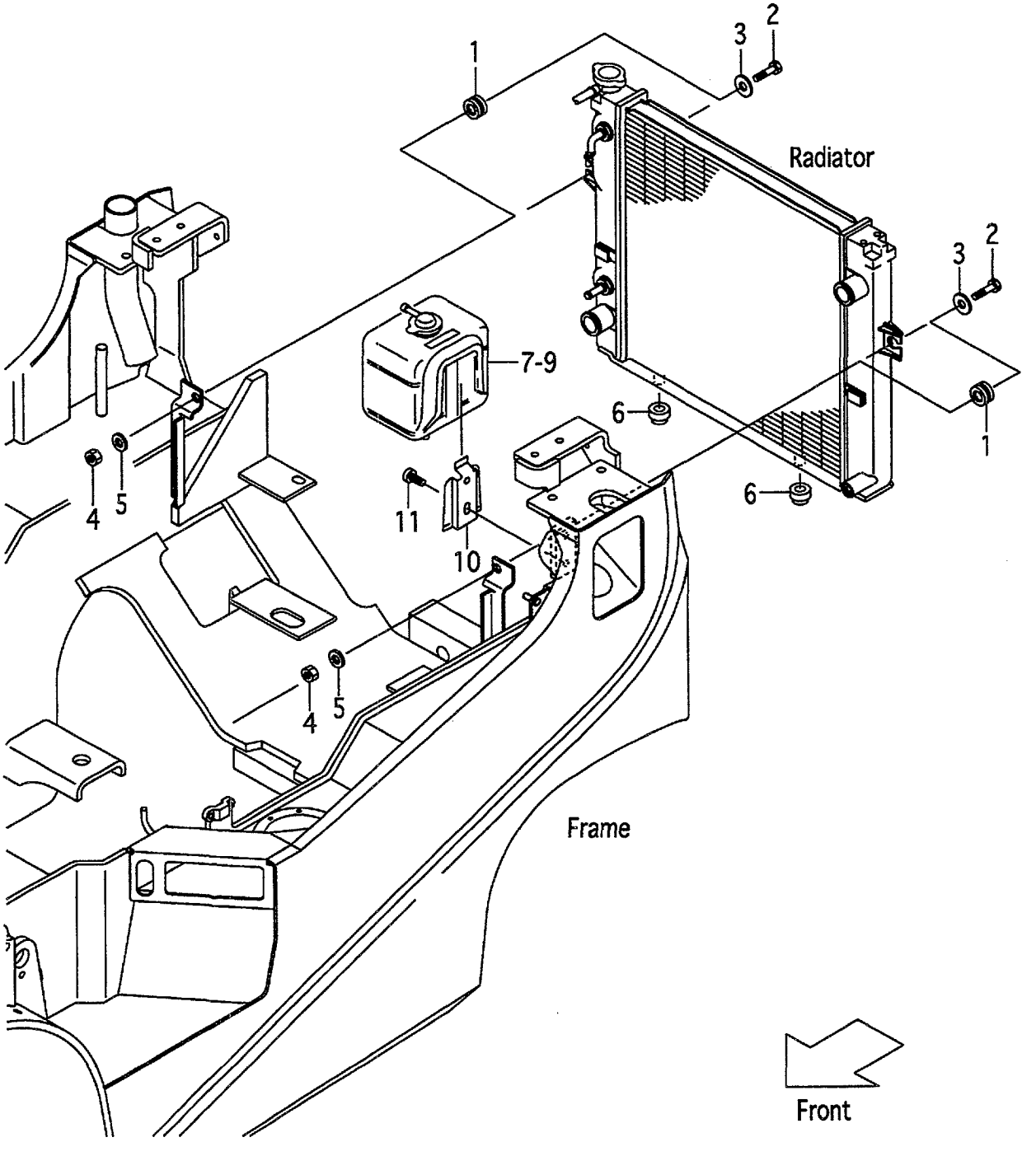

FIG.10

(F5012130)

A:FG10C19 FG10T19 FG15C19 FG15T19 FG18C19 FG18T19
B:FD10C19 FD10T19 FD15C19 FD15T19 FD18C19 FD18T19

Item No	Part No.	Mark	Description		Req'd	Remarks : Serial No.
1	214A2-12001		RUBBER	ﾗﾊﾞｰ	2	
2	214A2-12021		BOLT	ﾎﾞﾙﾄ	2	
3	22252-32251		WASHER	ﾜｯｼｬ	2	
4	23652-12051		NUT,LOCK	ﾅｯﾄ	2	
5	02000-00010		WASHER	ﾜｯｼｬ	2	
6	214A2-12011		RUBBER	ﾗﾊﾞｰ	2	
7	214A2-12111		TANK,RESERVE	ﾀﾝｸ	1	INC.8,9
-	214A2-12121		TANK,RESERVE	ﾀﾝｸ	1	[OKM] INC.8,9
8	214A2-13001		CAP	ｷｬｯﾌﾟ	1	
9	214A2-13011		PACKING	ﾊﾟｯｷﾝｸﾞ	1	
10	214A2-12141		BRACKET	ﾌﾞﾗｹｯﾄ	1	
11	214A2-42611		SCREW	ｽｸﾘｭ	2	

FIG.11 DUST SCREEN [DSR006][DSR008]

(F5012140) ﾀﾞｽﾄｽｸﾘｰﾝ

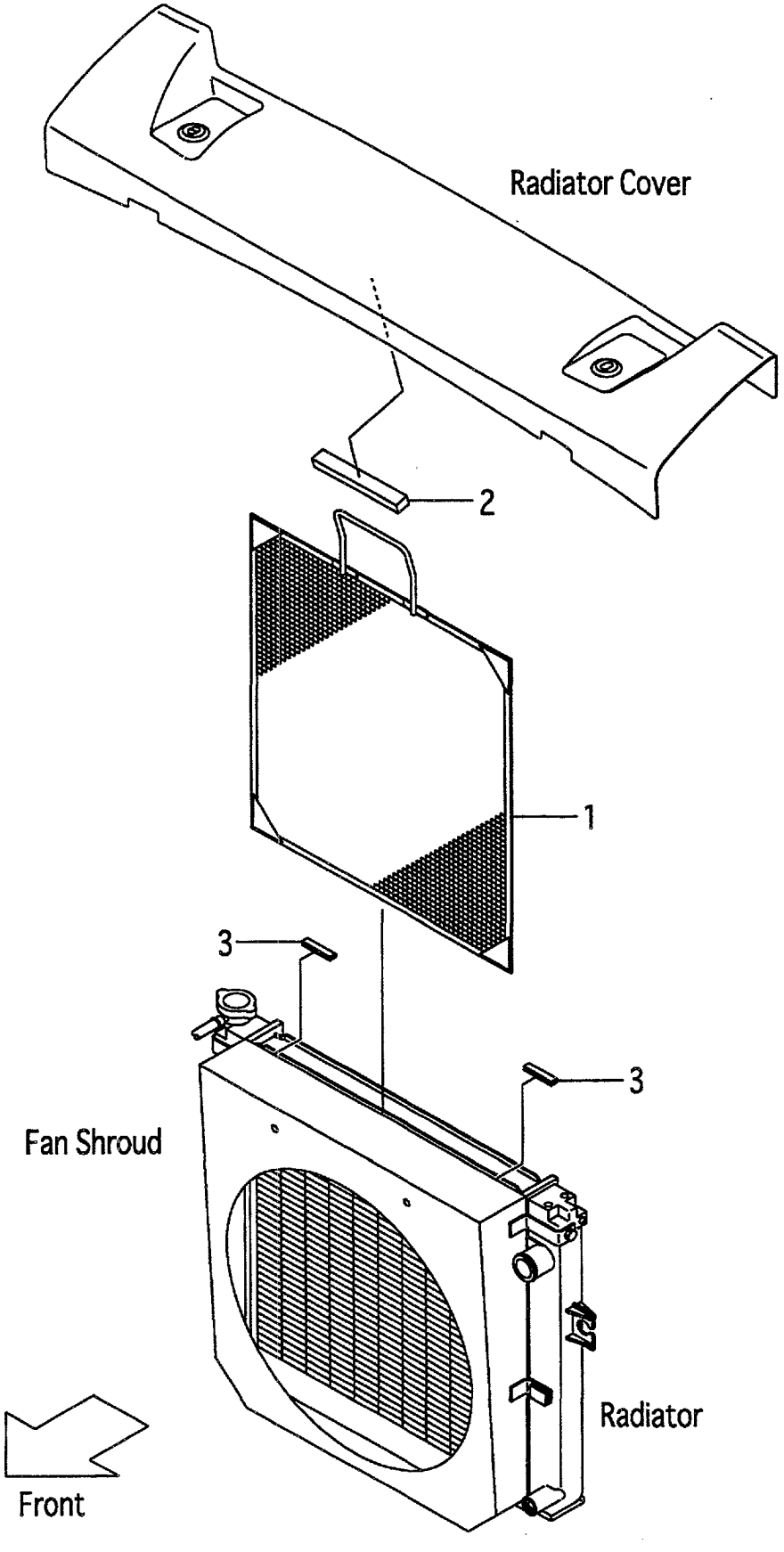

FIG.11

(F5012140)

A:FG10C19 FG10T19 FG15C19 FG15T19 FG18C19 FG18T19
B:FD10C19 FD10T19 FD15C19 FD15T19 FD18C19 FD18T19

Item No	Part No.	Mark	Description		Req'd	Remarks : Serial No.
1	519G6-52051		SCREEN,DUST	ｽｸﾘｰﾝ	1	[DSR006]
-	519G6-52151		SCREEN,DUST	ｽｸﾘｰﾝ	1	[DSR008]
2	509P3-72151		RUBBER	ﾗﾊﾞｰ	1	[DSR006][DSR008]
3	209P6-42831		EDGING	ｴｯｼﾞﾝｸﾞ	2	[DSR006][DSR008]

FIG.12 FUEL SYSTEM (G-TYPE)

(F5012210) フューエルシステム

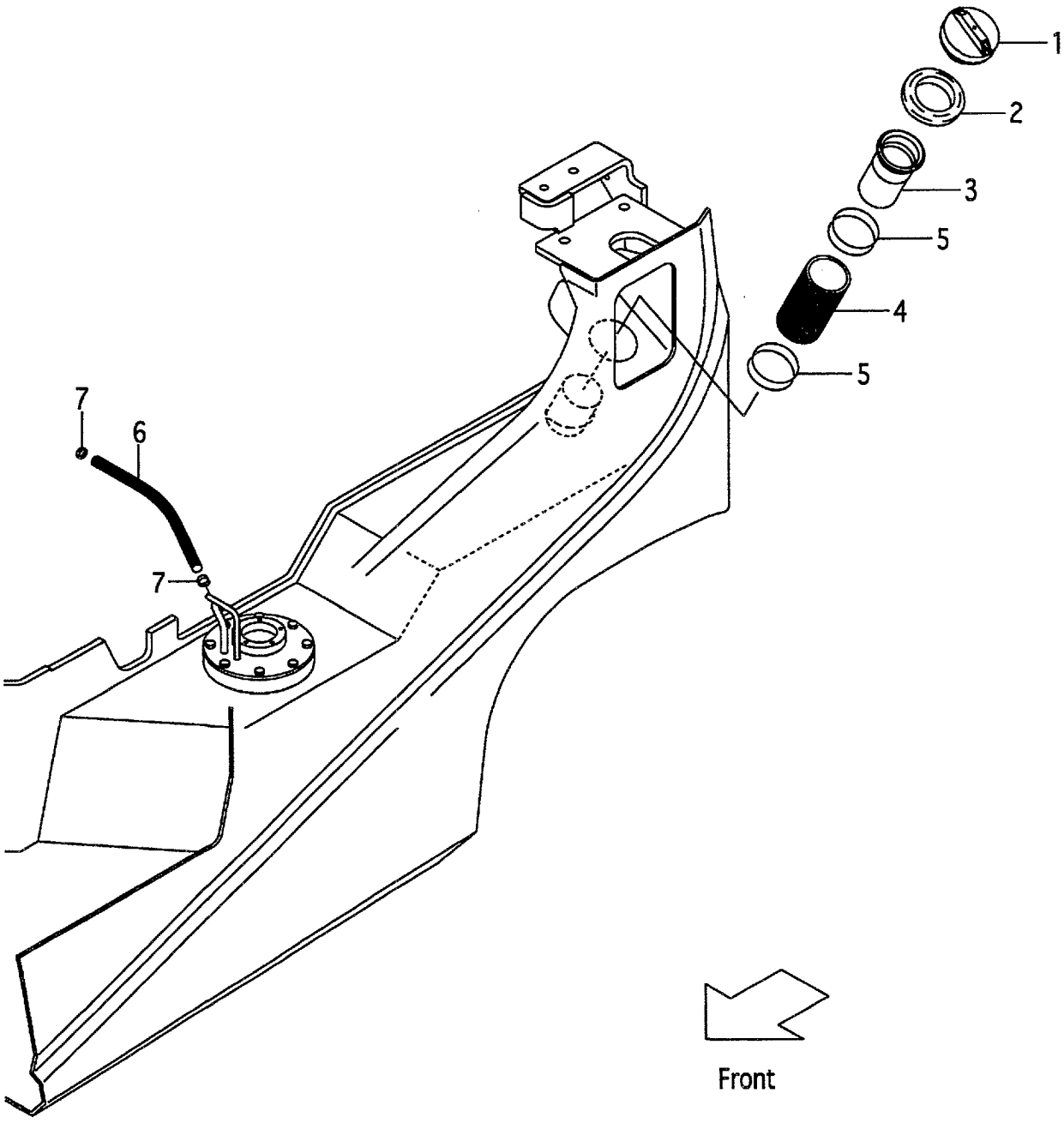

FIG.12
(F5012210)

A:FG10C19 FG10T19 FG15C19 FG15T19 FG18C19 FG18T19

Item No	Part No.	Mark	Description		Req'd	Remarks : Serial No.
1	216G2-22051		CAP,FUEL	ｷｬｯﾌﾟ	1	
2	216G2-22211		GROMMET	ｸﾞﾛﾒｯﾄ	1	
3	218G2-22001		PIPE,FUEL	ﾊﾟｲﾌﾟ	1	
4	218G2-22051		HOSE,FUEL	ﾎｰｽ	1	
5	04911-00060		CLIP	ｸﾘｯﾌﾟ	2	
6	21152-22151		HOSE,FUEL,7.5X300	ﾎｰｽ	1	
7	22192-22091		CLIP	ｸﾘｯﾌﾟ	2	

FIG.13 FUEL SYSTEM (D-TYPE)

(F5012220) フューエルシステム

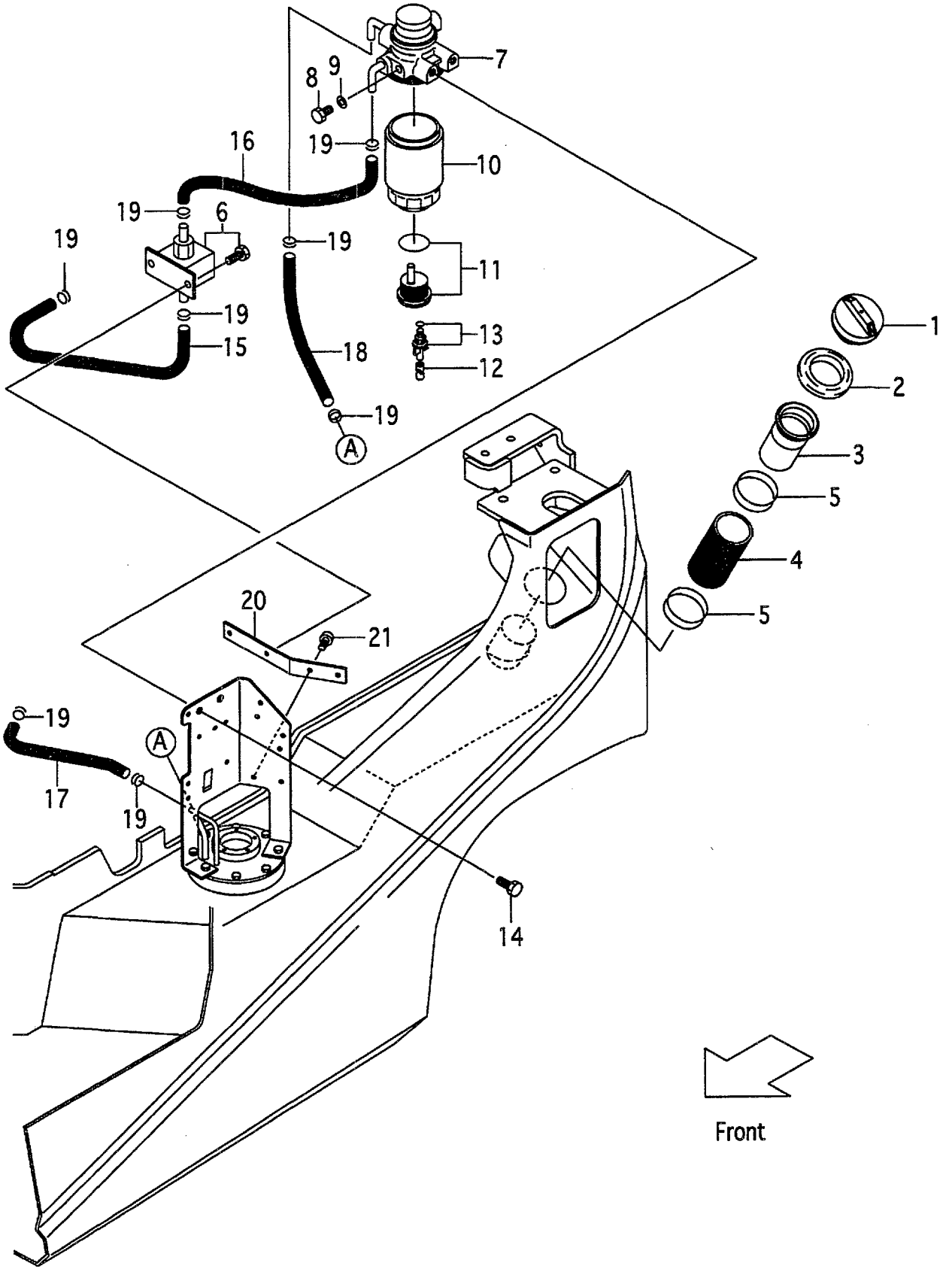

FIG.13
(F5012220)

A:FD10C19 FD10T19 FD15C19 FD15T19 FD18C19 FD18T19

Item No	Part No.	Mark	Description		Req'd	Remarks : Serial No.
1	216G2-22051		CAP,FUEL	ｷｬｯﾌﾟ	1	
2	216G2-22211		GROMMET	ｸﾞﾛﾒｯﾄ	1	
3	218G2-22001		PIPE,FUEL	ﾊﾟｲﾌﾟ	1	
4	218G2-22051		HOSE,FUEL	ﾎｰｽ	1	
5	04911-00060		CLIP	ｸﾘｯﾌﾟ	2	
6	220F2-22001		PUMP,FUEL	ﾎﾟﾝﾌﾟ	1	
A1	24662-22032		FILTER-ASSY,FUEL	ﾌｨﾙﾀｱｯｾﾝ	1	INC.7-13
7	NO PART NO.	#	BODY	ﾎﾞﾃﾞｨ	1	
8	Z-8-94132-674-0		PLUG	ﾌﾟﾗｸﾞ	1	
9	Z-8-94132-675-0		GASKET	ｶﾞｽｹｯﾄ	1	
10	20801-02141		CARTRIDGE	ｶｰﾄﾘｯｼﾞ	1	
11	NO PART NO.	#*	SENSOR	ｾﾝｻ	1	
12	Z-8-94367-956-0	*	HOSE	ﾎｰｽ	1	
13	Z-8-94367-957-0	*	PLUG	ﾌﾟﾗｸﾞ	1	
14	01183-08016		BOLT	ﾎﾞﾙﾄ	2	
15	21152-22121		HOSE,FUEL,7.5X420	ﾎｰｽ	1	
16	21152-22151		HOSE,FUEL,7.5X300	ﾎｰｽ	1	
17	24662-22141		HOSE,FUEL,6.5X380	ﾎｰｽ	1	
18	24662-22131		HOSE,FUEL,7.5X270	ﾎｰｽ	1	
19	22192-22091		CLIP	ｸﾘｯﾌﾟ	8	
20	238A2-22002		BRACKET,PUMP	ﾌﾞﾗｹｯﾄ	1	
21	214A2-42611		SCREW	ｽｸﾘｭ	2	
K1	Z-8-94367-294-0		KIT,SENSOR	ｾﾝｻｰｷｯﾄ	1	INC.11-13

FIG.14 EXHAUST SYSTEM (G-TYPE)

(F5012310) エキゾーストシステム

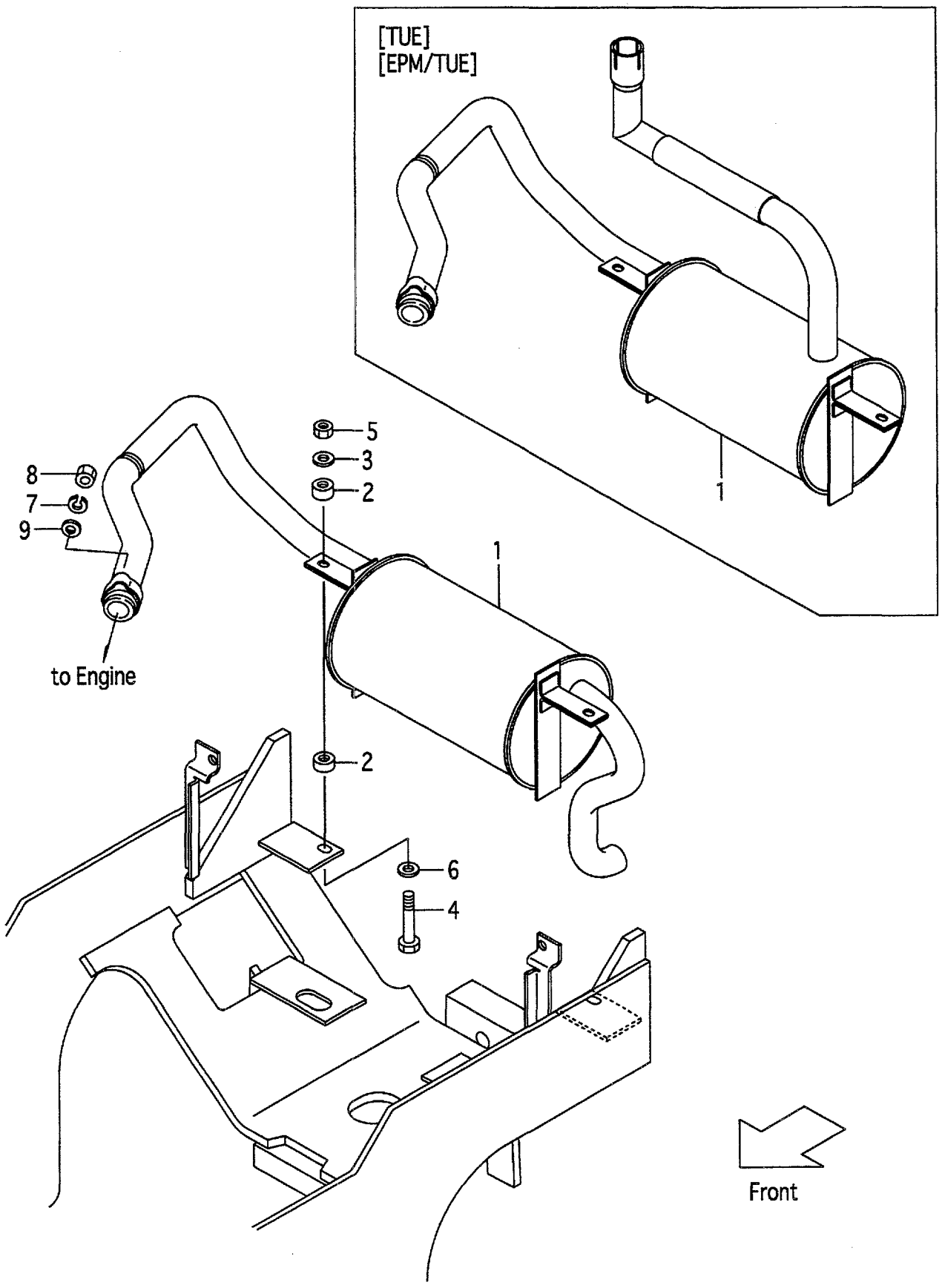

FIG.14
(F5012310)

A:FG10C19 FG10T19 FG15C19 FG15T19 FG18C19 FG18T19

Item No	Part No.	Mark	Description		Req'd	Remarks : Serial No.
1	218G2-30101		MUFFLER	ﾏﾌﾗ	1	
-	518G0-80201		MUFFLER	ﾏﾌﾗ	1	[TUE]
-	518G1-70001		MUFFLER	ﾏﾌﾗ	1	[EPM]
-	518G0-80211		MUFFLER	ﾏﾌﾗ	1	[EPM/TUE]
2	22252-32241		RUBBER	ﾗﾊﾞｰ	4	
3	22252-32251		WASHER	ﾜｯｼｬ	2	
4	21232-32551		BOLT	ﾎﾞﾙﾄ	2	
5	23652-12051		NUT,LOCK	ﾅｯﾄ	2	
6	02000-00010		WASHER	ﾜｯｼｬ	2	
7	02010-00008		WASHER	ﾜｯｼｬ	2	
8	01400-20008		NUT	ﾅｯﾄ	2	
9	02000-00008		WASHER	ﾜｯｼｬ	2	

FIG.15 EXHAUST SYSTEM (D-TYPE)

(F5012320) エキゾーストシステム

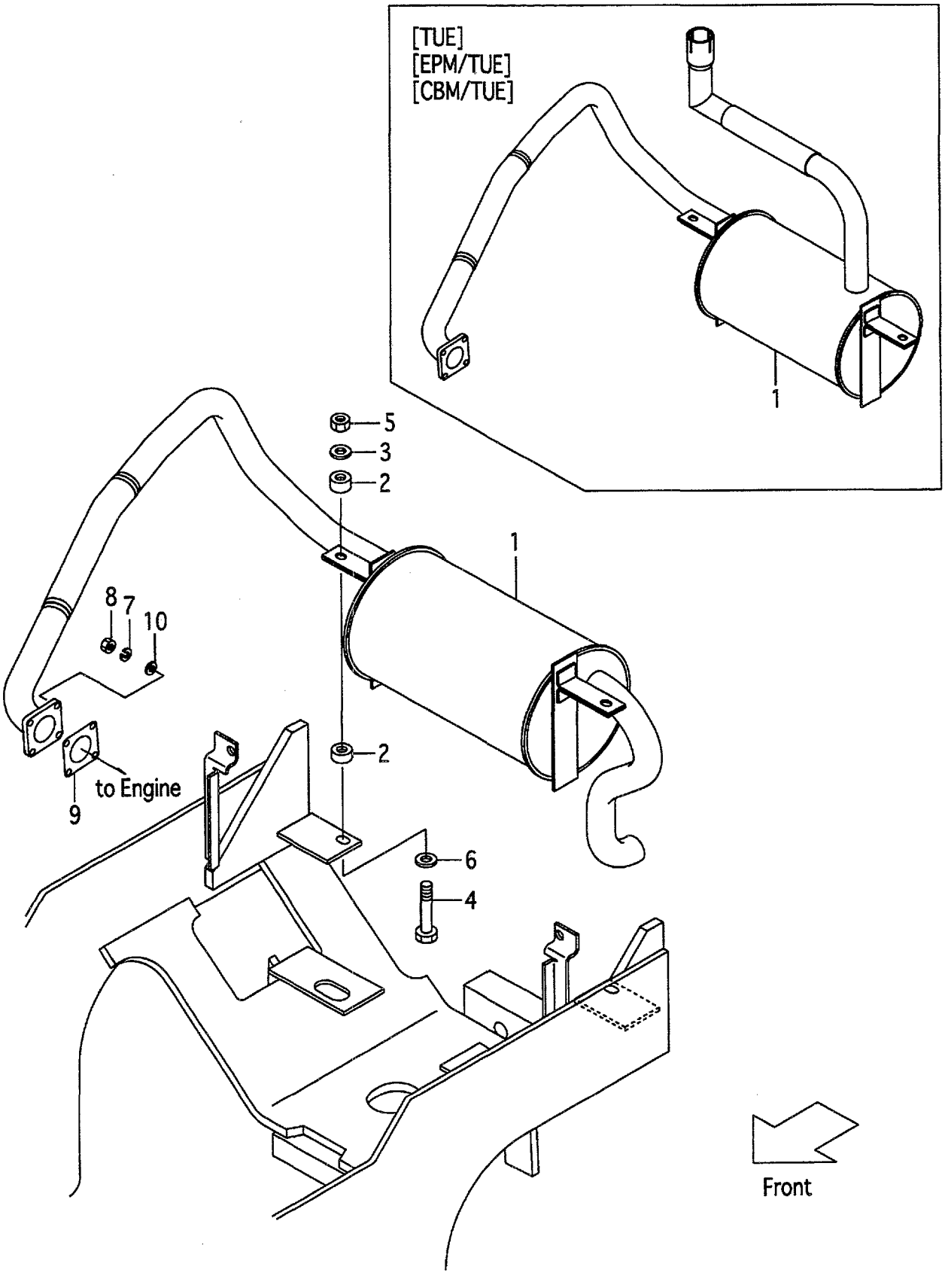

FIG.15
(F5012320)

A:FD10C19 FD10T19 FD15C19 FD15T19 FD18C19 FD18T19

Item No	Part No.	Mark	Description		Req'd	Remarks : Serial No.
1	219G2-30101		MUFFLER	ﾏﾌﾗ	1	
-	519G0-80201		MUFFLER	ﾏﾌﾗ	1	[TUE]
-	519G1-70001		MUFFLER	ﾏﾌﾗ	1	[EPM]
-	519G0-80211		MUFFLER	ﾏﾌﾗ	1	[EPM/TUE]
-	519G1-70011		MUFFLER	ﾏﾌﾗ	1	[CBM]
-	519G0-80221		MUFFLER	ﾏﾌﾗ	1	[CBM/TUE]
2	22252-32241		RUBBER	ﾗﾊﾞｰ	4	
3	22252-32251		WASHER	ﾜｯｼｬ	2	
4	21232-32551		BOLT	ﾎﾞﾙﾄ	2	
5	23652-12051		NUT,LOCK	ﾅｯﾄ	2	
6	02000-00010		WASHER	ﾜｯｼｬ	2	
7	02010-00008		WASHER	ﾜｯｼｬ	4	
8	01400-20008		NUT	ﾅｯﾄ	4	
9	217G2-32001		GASKET	ｶﾞｽｹｯﾄ	1	
10	02000-00008		WASHER	ﾜｯｼｬ	4	

FIG.16 POST & TAIL [TUE]

(F5012330) ﾎﾟｽﾄ&ﾃｲﾙ

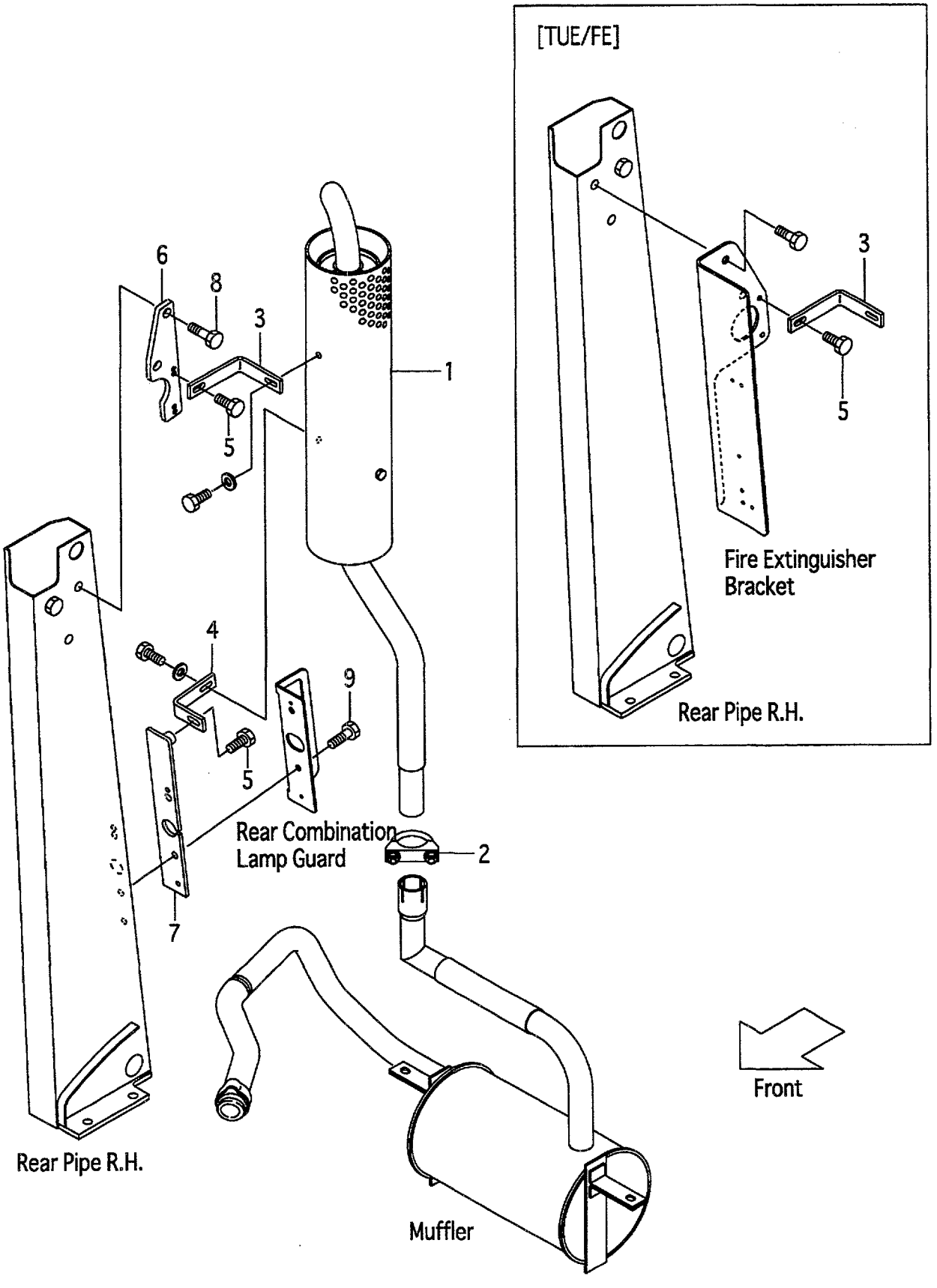

FIG.16
(F5012330)

A:FG10C19 FG10T19 FG15C19 FG15T19 FG18C19 FG18T19
B:FD10C19 FD10T19 FD15C19 FD15T19 FD18C19 FD18T19

Item No	Part No.	Mark	Description		Req'd	Remarks : Serial No.
1	537A0-80301		MUFFLER,VERTICAL	ﾏﾌﾗ	1	[TUE]
2	234A2-30501		CLAMP,U-BOLT	ｸﾗﾝﾌﾟ	1	[TUE]
3	518G0-82001		STAY	ｽﾃｰ	1	[TUE]
4	524T1-72031		STAY	ｽﾃｰ	1	[TUE]
5	01185-08016		BOLT	ﾎﾞﾙﾄ	2	[TUE]
6	510F0-82032		BRACKET,STAY	ﾌﾞﾗｹｯﾄ	1	[TUE](WITHOUT TUE/FE)
7	534A0-82101		BRACKET,STAY	ﾌﾞﾗｹｯﾄ	1	[TUE]
8	01186-12045		BOLT	ﾎﾞﾙﾄ	2	[TUE](WITHOUT TUE/FE)
9	01183-08022		BOLT	ﾎﾞﾙﾄ	2	[TUE]

FIG.17 COMBINATION METER (G-TYPE)

(F5012410) コンビネーションメータ

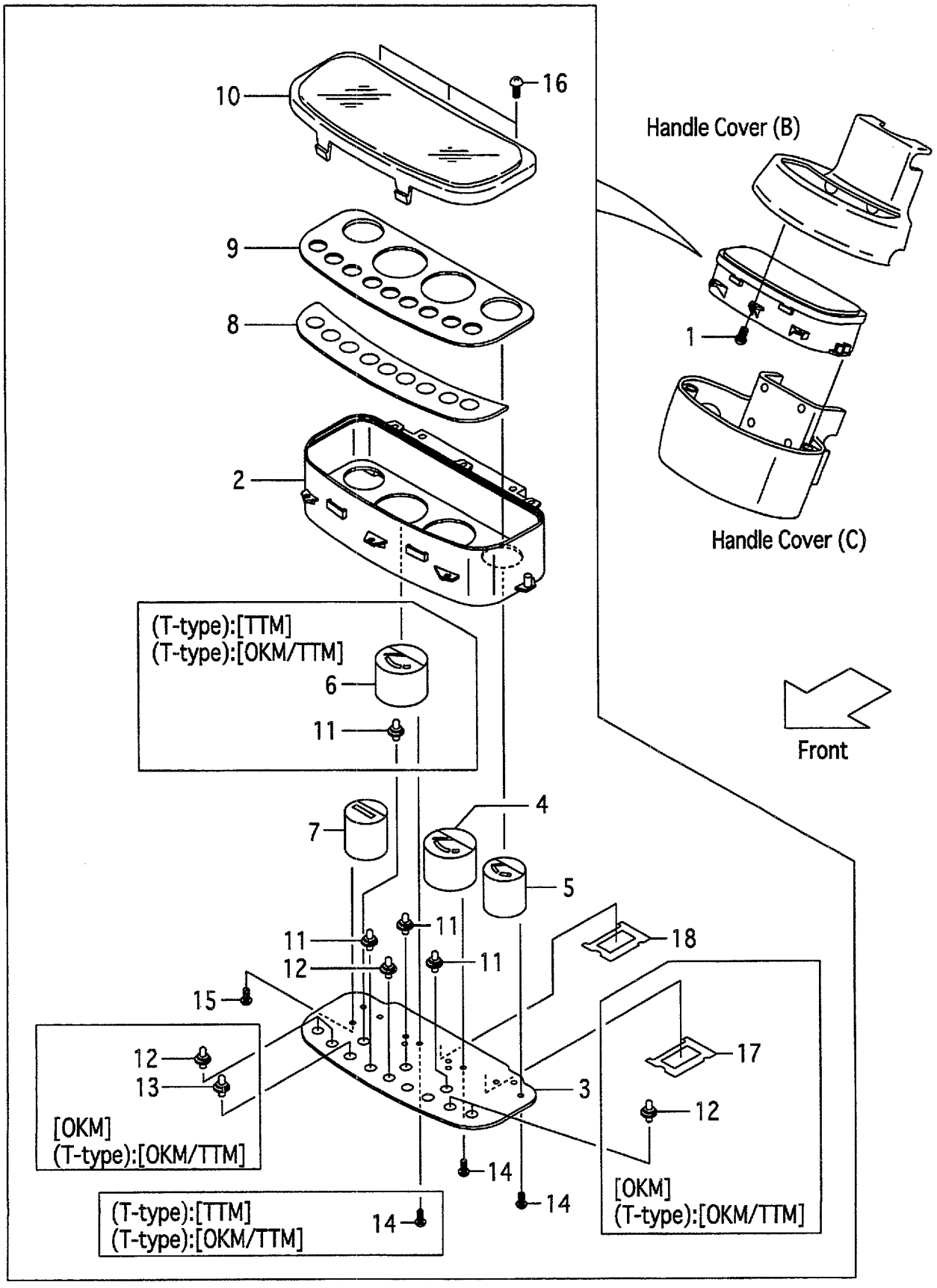

A:FG10C19 FG15C19 FG18C19
B:FG10T19 FG15T19 FG18T19

Item No	Part No.	Mark	Description		Req'd	Remarks : Serial No.
1	222A2-42031		SCREW	ｽｸﾘｭ	5	
A1	216G2-40301		METER,COMBINATION	ｺﾝﾋﾞﾈｰｼｮﾝﾒｰﾀ	1	INC.2-5,7-12,14-16,18
-	516G6-20101		METER,COMBINATION	ｺﾝﾋﾞﾈｰｼｮﾝﾒｰﾀ	1	[OKM] INC.2-5,7-18
-	516H8-80101		METER,COMBINATION	ｺﾝﾋﾞﾈｰｼｮﾝﾒｰﾀ	1	B [TTM] INC.2-12,14-16,18
-	516G6-20201		METER,COMBINATION	ｺﾝﾋﾞﾈｰｼｮﾝﾒｰﾀ	1	B [OKM/TTM] INC.2-18
2	216G2-43201		HOUSING	ﾊｳｼﾞﾝｸﾞ	1	
3	216G2-43211		CIRCUIT,PRINTED	ｻｰｷｯﾄ	1	
-	516G6-22051		CIRCUIT,PRINTED	ｻｰｷｯﾄ	1	[OKM]
-	516G6-22051		CIRCUIT,PRINTED	ｻｰｷｯﾄ	1	B [OKM/TTM]
4	216G2-43231		GAUGE,WATER-TEMP	ｹﾞｰｼﾞ	1	
5	216G2-43241		GAUGE,FUEL	ｹﾞｰｼﾞ	1	
6	216G2-43251		GAUGE,OIL-TEMP	ｹﾞｰｼﾞ	1	B [TTM][OKM/TTM]
7	216G2-43261		METER,HOUR	ﾒｰﾀ	1	
8	216G2-43271		LENS,WARNING	ﾚﾝｽﾞ	1	
9	216G2-43281		PLATE,SHADOW	ﾌﾟﾚｰﾄ	1	
-	216G2-43291		PLATE,SHADOW	ﾌﾟﾚｰﾄ	1	B [TTM][OKM/TTM]
10	216G2-43301		COVER,FRONT	ｶﾊﾞｰ	1	
11	222A2-42331		SOCKET & BULB	ｿｹｯﾄ	3	(14V/1.4W)
-	222A2-42331		SOCKET & BULB	ｿｹｯﾄ	4	B [TTM][OKM/TTM](14V/1.4W)
12	222A2-42401		SOCKET & BULB	ｿｹｯﾄ	1	(13.5V/2W)
-	222A2-42401		SOCKET & BULB	ｿｹｯﾄ	5	[OKM](13.5V/2W)
-	222A2-42401		SOCKET & BULB	ｿｹｯﾄ	5	B [OKM/TTM](13.5V/2W)
13	222A2-42341		SOCKET & BULB	ｿｹｯﾄ	1	[OKM](14V/3W)
-	222A2-42341		SOCKET & BULB	ｿｹｯﾄ	1	B [OKM/TTM](14V/3W)
14	229F2-42421		SCREW	ｽｸﾘｭ	6	
-	229F2-42421		SCREW	ｽｸﾘｭ	9	B [TTM][OKM/TTM]
15	229F2-42431		SCREW	ｽｸﾘｭ	3	
16	222A2-42361		SCREW	ｽｸﾘｭ	3	
17	516G6-22031		GASKET	ｶﾞｽｹｯﾄ	1	[OKM]
-	516G6-22031		GASKET	ｶﾞｽｹｯﾄ	1	B [OKM/TTM]
18	216G2-43161		GASKET	ｶﾞｽｹｯﾄ	1	
19	239A2-42201	+	WIRE-HARNESS,F.GUARD	ﾜｲﾔﾊｰﾈｽ	1	A
-	239B2-42201	+	WIRE-HARNESS,F.GUARD	ﾜｲﾔﾊｰﾈｽ	1	B
-	539B2-32201	+	WIRE-HARNESS,F.GUARD	ﾜｲﾔﾊｰﾈｽ	1	B [LCR]
-	539A3-72151	+	WIRE-HARNESS,F.GUARD	ﾜｲﾔﾊｰﾈｽ	1	A [FC]
-	539B3-72151	+	WIRE-HARNESS,F.GUARD	ﾜｲﾔﾊｰﾈｽ	1	B [FC]

FIG.17 COMBINATION METER (G-TYPE)

(F5012410) コンビネーションメータ

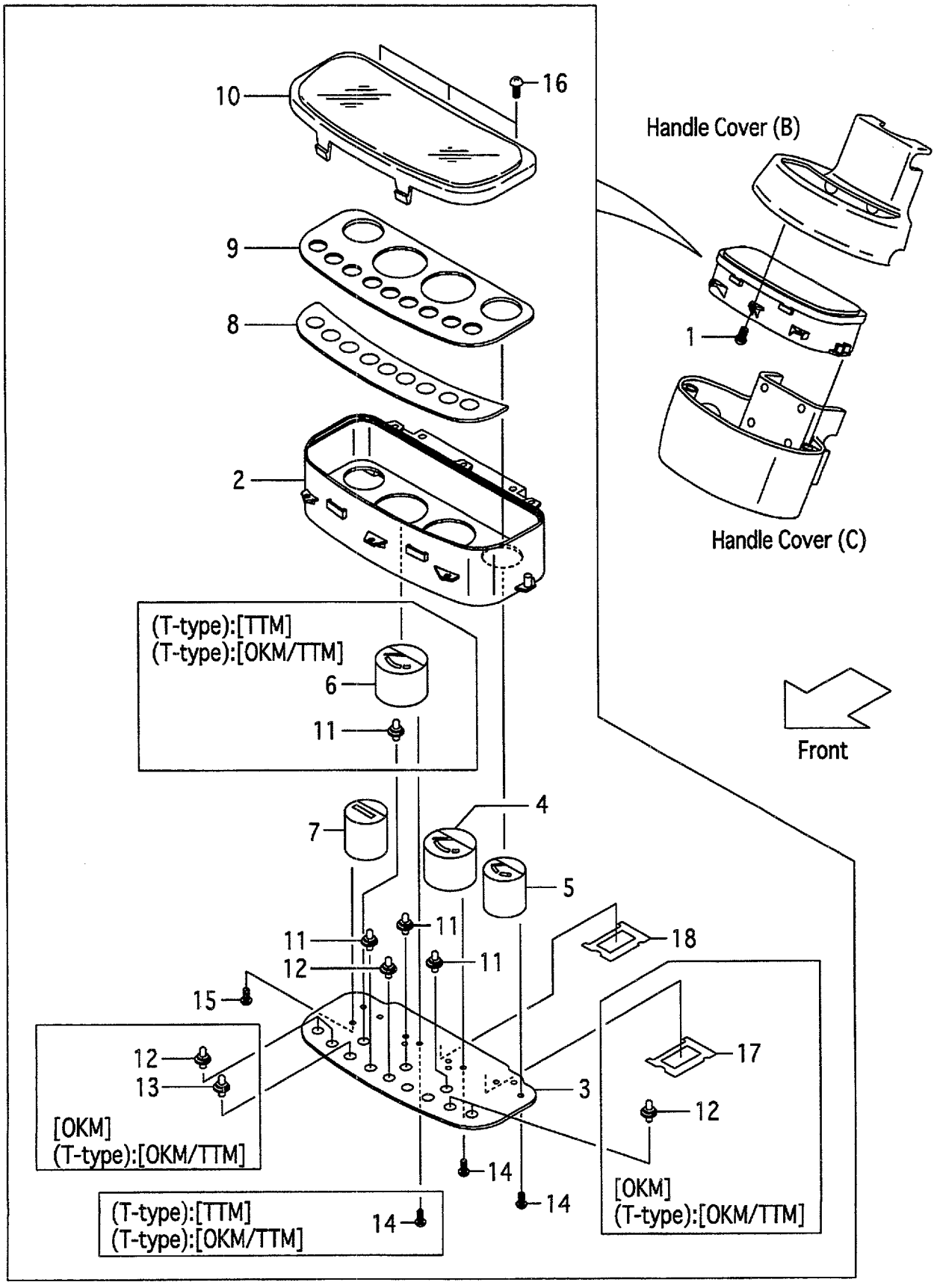

FIG.17
(F5012410)

A:FG10C19 FG15C19 FG18C19
B:FG10T19 FG15T19 FG18T19

Item No	Part No.	Mark	Description	Req'd	Remarks : Serial No.
-	539B3-72201	+	WIRE-HARNESS,F.GUARD ﾜｲﾔﾊｰﾈｽ	1	B [FC/LCR]
-	539B3-82301	+	WIRE-HARNESS,F.GUARD ﾜｲﾔﾊｰﾈｽ	1	B [EXE][EXN]

FIG.18 COMBINATION METER (D-TYPE)

(F5012420) コンビネーションメータ

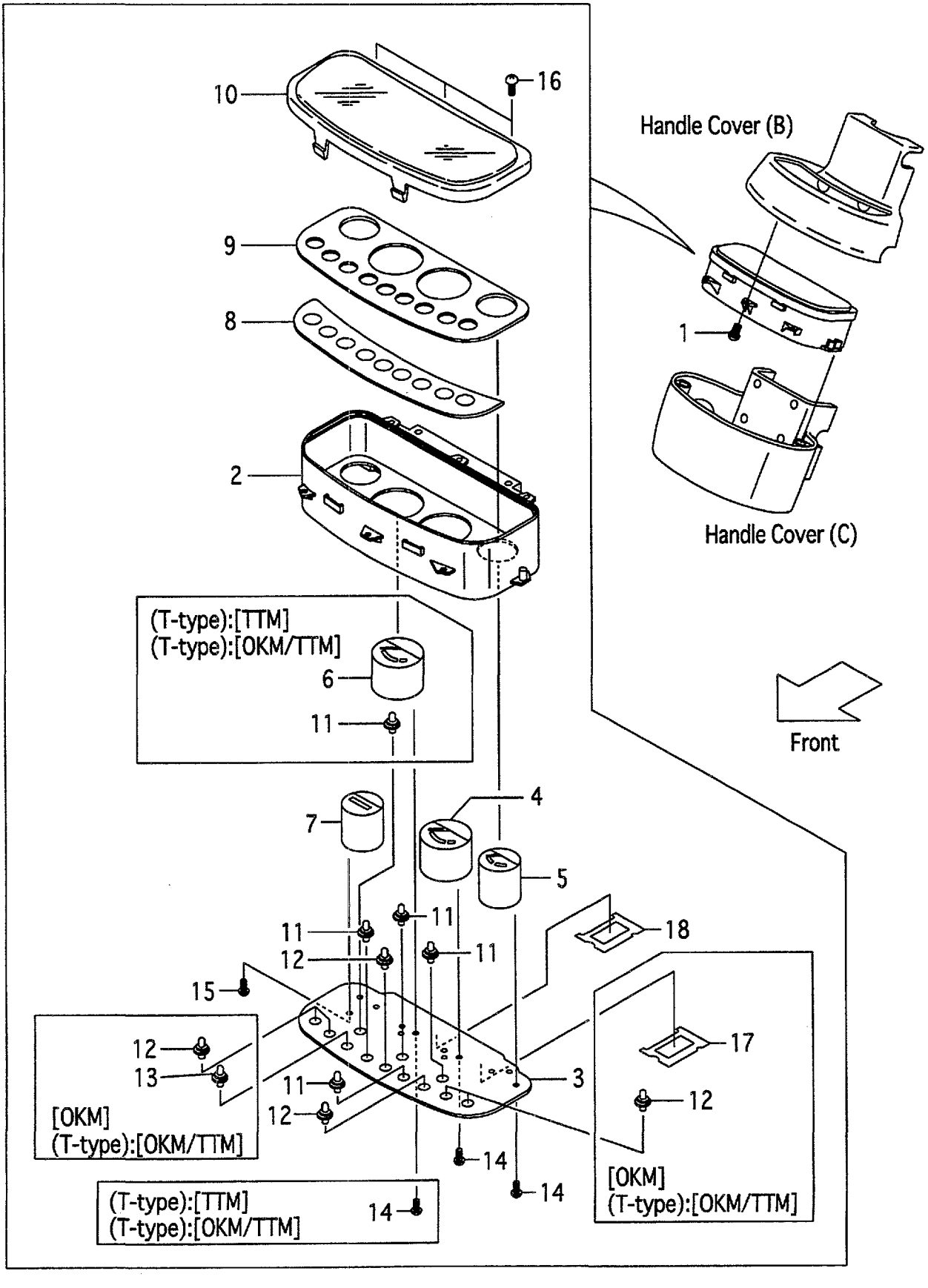

A:FD10C19 FD15C19 FD18C19
B:FD10T19 FD15T19 FD18T19

Item No	Part No.	Mark	Description		Req'd	Remarks : Serial No.
1	222A2-42031		SCREW	ｽｸﾘｭ	5	
A1	217G2-40301		METER,COMBINATION	ｺﾝﾋﾞﾈｰｼｮﾝﾒｰﾀ	1	INC.2-5,7-12,14-16,18
-	517G6-20101		METER,COMBINATION	ｺﾝﾋﾞﾈｰｼｮﾝﾒｰﾀ	1	[OKM] INC.2-5,7-18
-	517H8-80101		METER,COMBINATION	ｺﾝﾋﾞﾈｰｼｮﾝﾒｰﾀ	1	B [TTM] INC.2-12,14-16,18
-	517G6-20201		METER,COMBINATION	ｺﾝﾋﾞﾈｰｼｮﾝﾒｰﾀ	1	B [OKM/TTM] INC.2-18
2	216G2-43201		HOUSING	ﾊｳｼﾞﾝｸﾞ	1	
3	216G2-43221		CIRCUIT,PRINTED	ｻｰｷｯﾄ	1	
-	516G6-22051		CIRCUIT,PRINTED	ｻｰｷｯﾄ	1	[OKM]
-	516G6-22051		CIRCUIT,PRINTED	ｻｰｷｯﾄ	1	B [OKM/TTM]
4	216G2-43231		GAUGE,WATER-TEMP	ｹﾞｰｼﾞ	1	
5	216G2-43241		GAUGE,FUEL	ｹﾞｰｼﾞ	1	
6	216G2-43251		GAUGE,OIL-TEMP	ｹﾞｰｼﾞ	1	B [TTM][OKM/TTM]
7	216G2-43261		METER,HOUR	ﾒｰﾀ	1	
8	216G2-43271		LENS	ﾚﾝｽﾞ	1	
9	216G2-43281		PLATE,SHADOW	ﾌﾟﾚｰﾄ	1	
-	216G2-43291		PLATE,SHADOW	ﾌﾟﾚｰﾄ	1	B [TTM][OKM/TTM]
10	216G2-43301		COVER,FRONT	ｶﾊﾞｰ	1	
11	222A2-42331		SOCKET & BULB	ｿｹｯﾄ	4	(14V/1.4W)
-	222A2-42331		SOCKET & BULB	ｿｹｯﾄ	5	B [TTM][OKM/TTM](14V/1.4W)
12	222A2-42401		SOCKET & BULB	ｿｹｯﾄ	2	(13.5V/2W)
-	222A2-42401		SOCKET & BULB	ｿｹｯﾄ	6	[OKM](13.5V/2W)
-	222A2-42401		SOCKET & BULB	ｿｹｯﾄ	6	B [OKM/TTM](13.5V/2W)
13	222A2-42341		SOCKET & BULB	ｿｹｯﾄ	1	[OKM](14V/3W)
-	222A2-42341		SOCKET & BULB	ｿｹｯﾄ	1	B [OKM/TTM](14V/3W)
14	229F2-42421		SCREW	ｽｸﾘｭ	6	
-	229F2-42421		SCREW	ｽｸﾘｭ	9	B [TTM][OKM/TTM]
15	229F2-42431		SCREW	ｽｸﾘｭ	3	
16	222A2-42361		SCREW	ｽｸﾘｭ	3	
17	516G6-22031		GASKET	ｶﾞｽｹｯﾄ	1	[OKM]
-	516G6-22031		GASKET	ｶﾞｽｹｯﾄ	1	B [OKM/TTM]
18	216G2-43161		GASKET	ｶﾞｽｹｯﾄ	1	
19	239A2-42201	+	WIRE-HARNESS,F.GUARD	ﾜｲﾔﾊｰﾈｽ	1	A
-	239B2-42201	+	WIRE-HARNESS,F.GUARD	ﾜｲﾔﾊｰﾈｽ	1	B
-	539B2-32201	+	WIRE-HARNESS,F.GUARD	ﾜｲﾔﾊｰﾈｽ	1	B [LCR]
-	539A3-72151	+	WIRE-HARNESS,F.GUARD	ﾜｲﾔﾊｰﾈｽ	1	A [FC]
-	539B3-72151	+	WIRE-HARNESS,F.GUARD	ﾜｲﾔﾊｰﾈｽ	1	B [FC]

FIG.18 COMBINATION METER (D-TYPE)

(F5012420) コンビネーションメータ

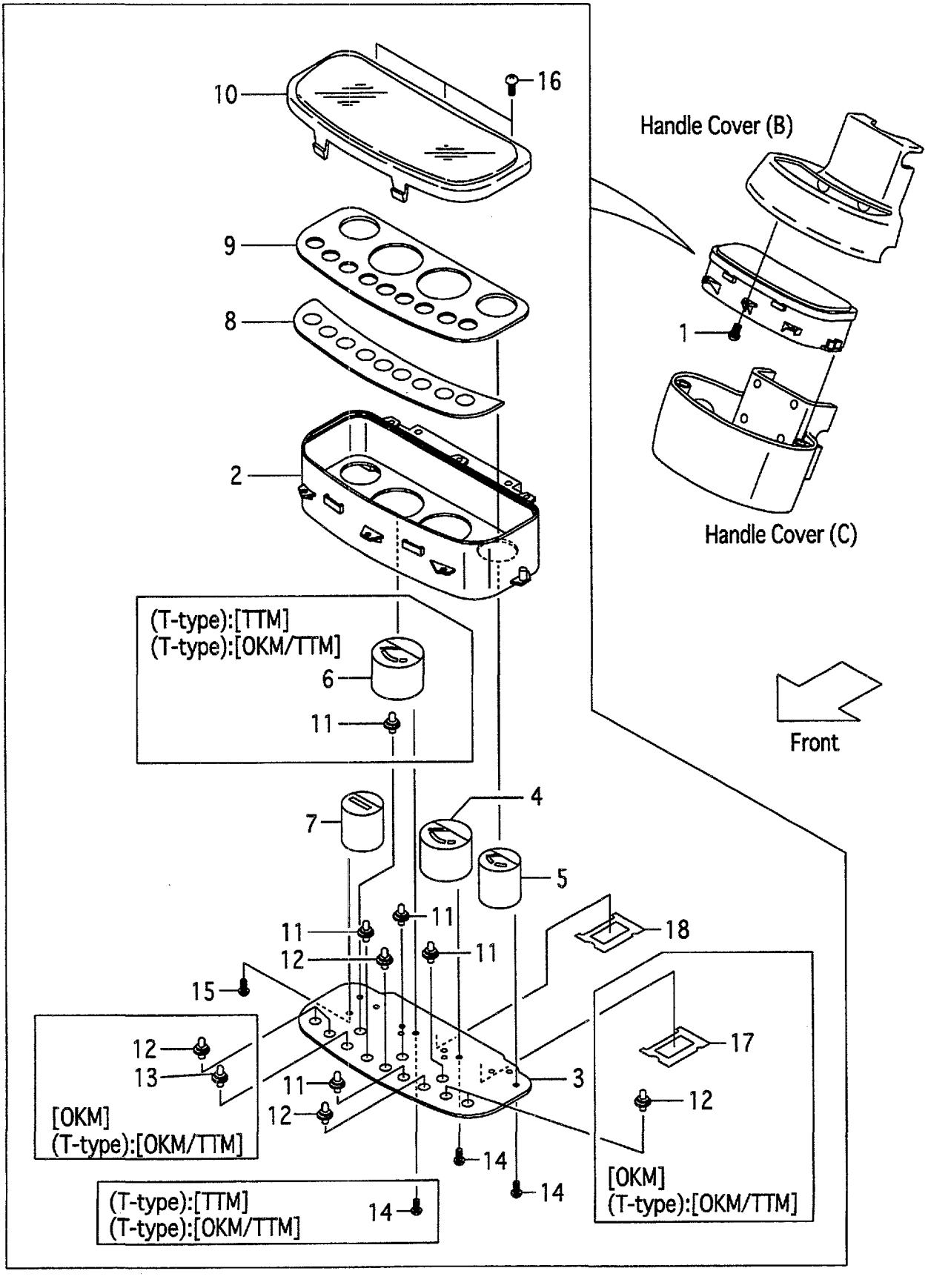

FIG.18
(F5012420)

A:FD10C19 FD15C19 FD18C19
B:FD10T19 FD15T19 FD18T19

Item No	Part No.	Mark	Description	Req'd	Remarks : Serial No.
-	539B3-72201	+	WIRE-HARNESS,F.GUARD ﾜｲﾔﾊｰﾈｽ	1	B [FC/LCR]
-	539B3-82301	+	WIRE-HARNESS,F.GUARD ﾜｲﾔﾊｰﾈｽ	1	B [EXE][EXN]

FIG.19 STEERING SHAFT COVER (C-TYPE)

(F5012430) ｽﾃｱﾘﾝｸﾞｼｬﾌﾄｶﾊﾞｰ

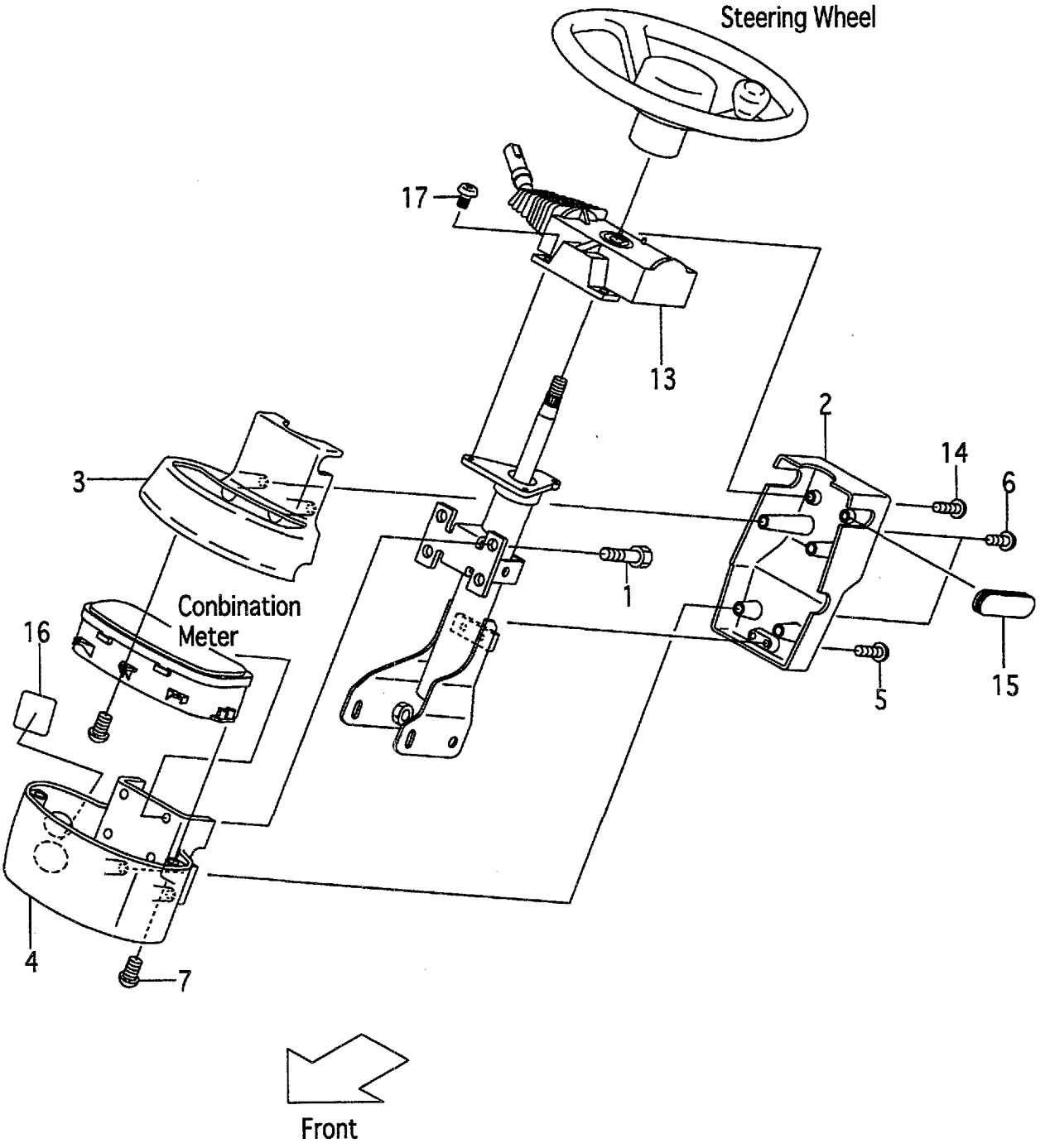

A:FG10C19 FG15C19 FG18C19
B:FD10C19 FD15C19 FD18C19

FIG.19
(F5012430)

Item No	Part No.	Mark	Description		Req'd	Remarks : Serial No.
1	01185-06016		BOLT	ﾎﾞﾙﾄ	4	
2	239A4-12501		COVER,HANDLE,A	ｶﾊﾞｰ	1	
3	239A4-12511		COVER,HANDLE,B	ｶﾊﾞｰ	1	
4	239A4-12521		COVER,HANDLE,C	ｶﾊﾞｰ	1	
-	539A7-72001		COVER,HANDLE,C	ｶﾊﾞｰ	1	[SWD]
5	214A6-42771		SCREW	ｽｸﾘｭ	2	
6	222A2-42031		SCREW	ｽｸﾘｭ	4	
7	216G4-12091		SCREW	ｽｸﾘｭ	2	
8	04913-11200	+	BAND	ﾊﾞﾝﾄﾞ	1	
9	216G2-42131	+	BAND	ﾊﾞﾝﾄﾞ	14	
10	04913-10100	+	BAND	ﾊﾞﾝﾄﾞ	6	
11	04913-11100	+	BAND	ﾊﾞﾝﾄﾞ	2	
12	04913-10200	+	BAND	ﾊﾞﾝﾄﾞ	2	
13	239A2-40501		SWITCH,COMBINATION	ｽｲｯﾁ	1	
14	209K2-43001		SCREW	ｽｸﾘｭ	2	
15	239A4-12541		GROMMET,HANDLE-COVER	ｸﾞﾛﾒｯﾄ	1	
16	229F6-42201		SEAL,PANEL-COVER	ｼｰﾙ	1	
17	01033-05014		SCREW	ｽｸﾘｭ	3	

FIG.20 STEERING SHAFT COVER (T-TYPE)

(F5012440) ｽﾃｱﾘﾝｸﾞｼｬﾌﾄｶﾊﾞｰ

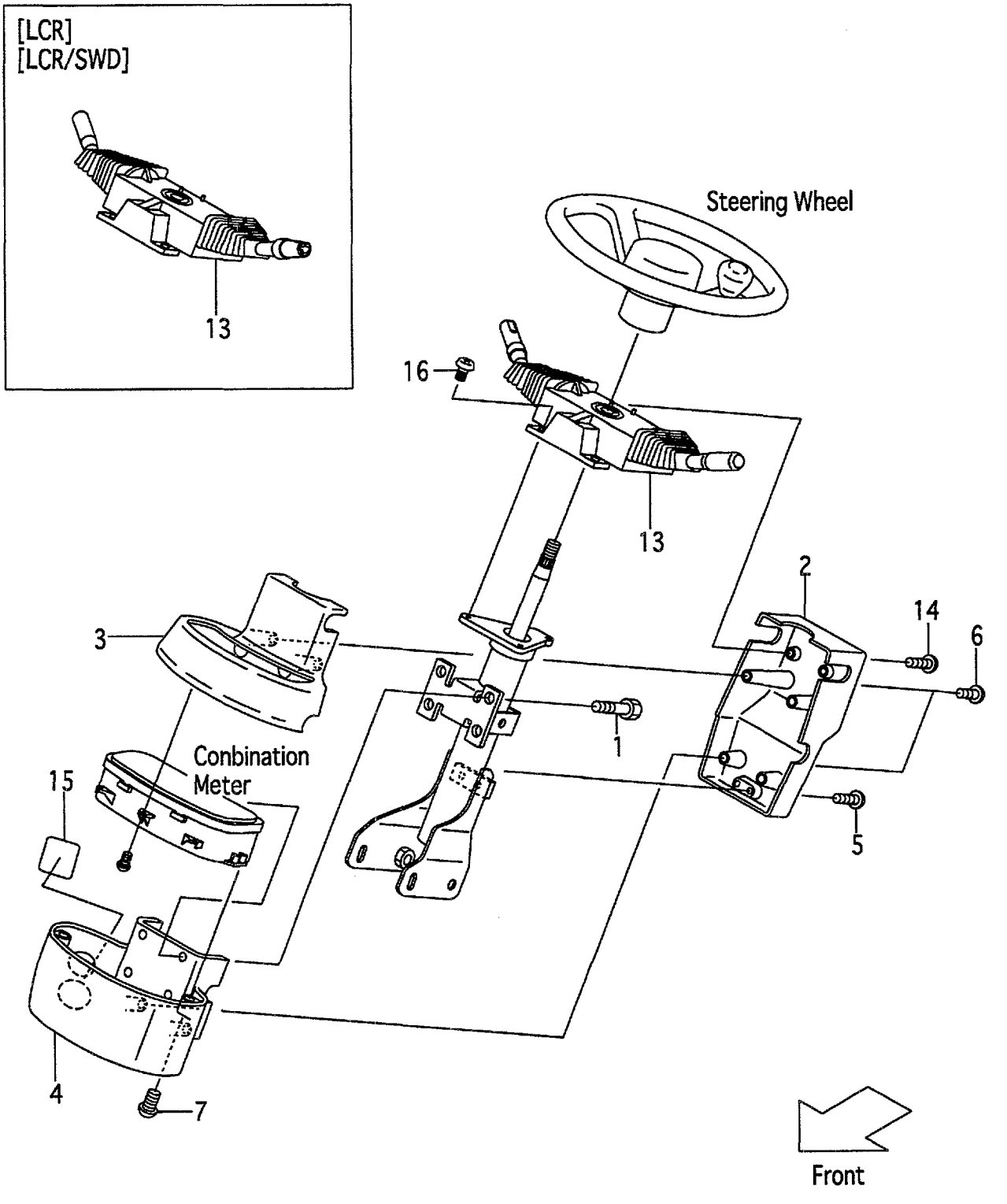

FIG.20

(F5012440)

A:FG10T19 FG15T19 FG18T19
B:FD10T19 FD15T19 FD18T19

Item No	Part No.	Mark	Description		Req'd	Remarks : Serial No.
1	01185-06016		BOLT	ﾎﾞﾙﾄ	4	
2	239A4-12501		COVER,HANDLE,A	ｶﾊﾞｰ	1	
3	239A4-12511		COVER,HANDLE,B	ｶﾊﾞｰ	1	
4	239A4-12521		COVER,HANDLE,C	ｶﾊﾞｰ	1	
-	539A7-72001		COVER,HANDLE,C	ｶﾊﾞｰ	1	[SWD][LCR/SWD]
5	214A6-42771		SCREW	ｽｸﾘｭ	2	
6	222A2-42031		SCREW	ｽｸﾘｭ	4	
7	216G4-12091		SCREW	ｽｸﾘｭ	2	
8	04913-11200	+	BAND	ﾊﾞﾝﾄﾞ	1	
9	216G2-42131	+	BAND	ﾊﾞﾝﾄﾞ	14	
10	04913-10100	+	BAND	ﾊﾞﾝﾄﾞ	6	
11	04913-11100	+	BAND	ﾊﾞﾝﾄﾞ	2	
12	04913-10200	+	BAND	ﾊﾞﾝﾄﾞ	2	
13	209K2-40501		SWITCH,COMBINATION	ｽｲｯﾁ	1	
-	509K2-30101		SWITCH,COMBINATION	ｽｲｯﾁ	1	[LCR][LCR/SWD]
14	209K2-43001		SCREW	ｽｸﾘｭ	2	
15	229F6-42201		SEAL,PANEL-COVER	ｼｰﾙ	1	
16	01033-05014		SCREW	ｽｸﾘｭ	3	

FIG.21 ELECTRIC PARTS (1/2)(G-TYPE)

(F5012450) エレクトリックパーツ(1/2)

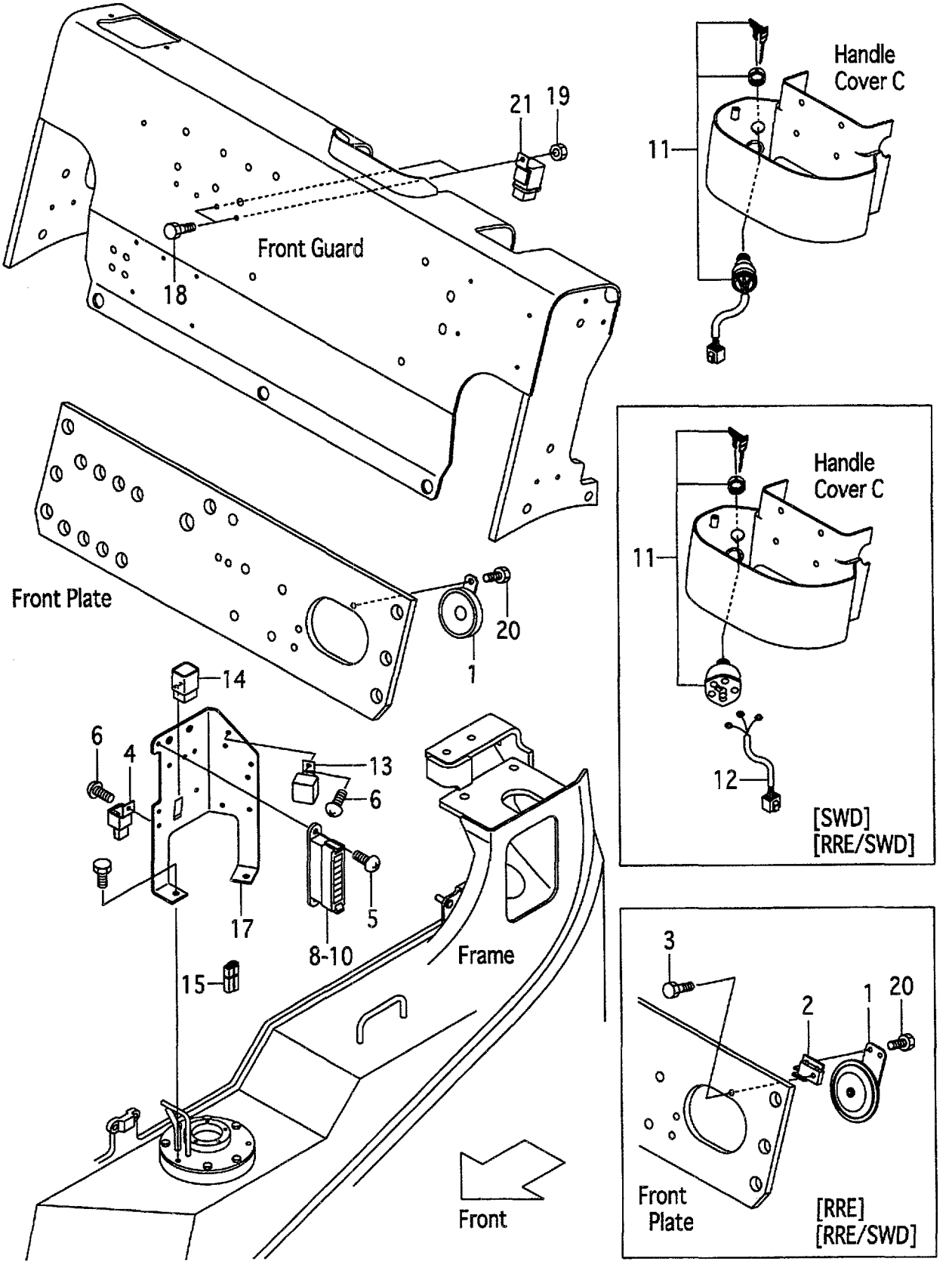

FIG.21

(F5012450)

A:FG10C19 FG10T19 FG15C19 FG15T19 FG18C19 FG18T19

Item No	Part No.	Mark	Description		Req'd	Remarks : Serial No.
1	216G2-43651		HORN	ﾎｰﾝ	1	
-	20712-40275		HORN	ﾎｰﾝ	1	[RRE][RRE/SWD]
2	539A9-92001		BRACKET,HORN	ﾌﾞﾗｹｯﾄ	1	[RRE][RRE/SWD]
3	01183-06025		BOLT	ﾎﾞﾙﾄ	1	[RRE][RRE/SWD]
4	216G2-43711		UNIT,FLASHER	ﾌﾗｯｼｬﾕﾆｯﾄ	1	
5	214A2-42621		SCREW	ｽｸﾘｭ	2	
6	214A2-42611		SCREW	ｽｸﾘｭ	2	
7	04913-10200	+	BAND	ﾊﾞﾝﾄﾞ	2	
8	235C2-40301		BOX,FUSE	ﾎﾞｯｸｽ	1	INC.9,10
9	214T2-42311		FUSE,10A	ﾋｭｰｽﾞ	7	
10	214T2-42321		FUSE,30A	ﾋｭｰｽﾞ	1	
11	216G2-42312		SWITCH,STARTER	ｽｲｯﾁ	1	
-	24352-42521		SWITCH,STARTER	ｽｲｯﾁ	1	[SWD][RRE/SWD]
12	534A7-72001		WIRE,LEAD	ﾜｲﾔ	1	[SWD][RRE/SWD]
13	217G2-42301		RELAY,STARTER	ﾘﾚｰ	1	1-10083
-	216G2-42321		RELAY,STARTER	ﾘﾚｰ	1	10084-
14	228F2-42131		RELAY,AUTO-CHOKE	0	1	
15	21152-42091		DIODE,MOLD-UNIT	ﾀﾞｲｵｰﾄﾞ	1	
16	234B2-42201	+	TIE,PUSH-MOUNT	ﾀｲ	1	
17	218G2-42001		BRACKET,ELECTRIC	ﾌﾞﾗｹｯﾄ	1	
18	239A5-42381		BOLT	ﾎﾞﾙﾄ	2	
19	01400-00006		NUT	ﾅｯﾄ	2	
20	01185-08016		BOLT	ﾎﾞﾙﾄ	1	
-	01183-06016		BOLT	ﾎﾞﾙﾄ	2	[RRE][RRE/SWD]
21	26062-42881		RELAY,12V	ﾘﾚｰ	2	

FIG.22 ELECTRIC PARTS (1/2)(D-TYPE)

(F5012460) エレクトリックパーツ(1/2)

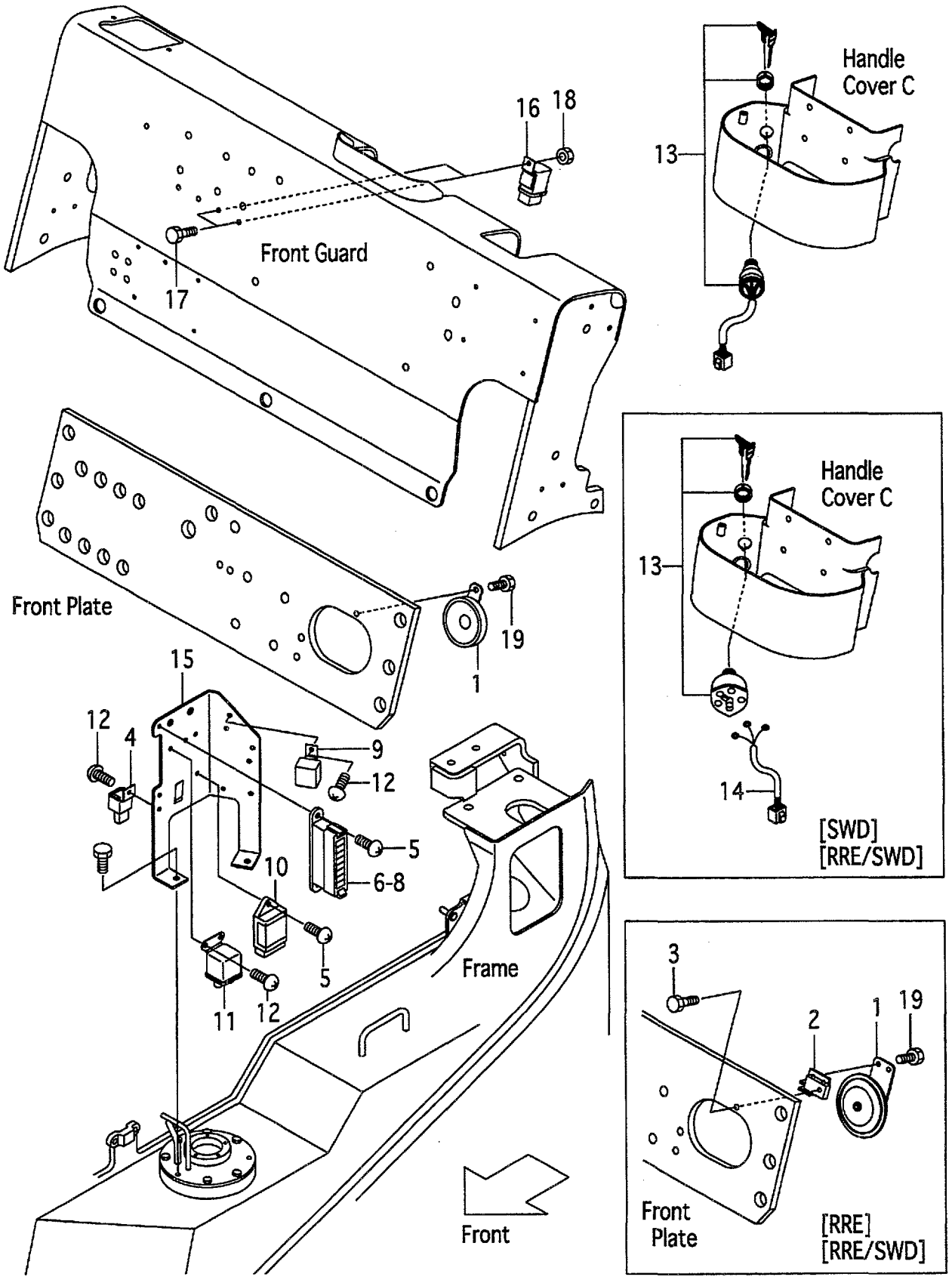

FIG.22
(F5012460)

A:FD10C19 FD10T19 FD15C19 FD15T19 FD18C19 FD18T19

Item No	Part No.	Mark	Description		Req'd	Remarks : Serial No.
1	216G2-43651		HORN	ﾎｰﾝ	1	
-	20712-40275		HORN	ﾎｰﾝ	1	[RRE][RRE/SWD]
2	539A9-92001		BRACKET,HORN	ﾌﾞﾗｹｯﾄ	1	[RRE][RRE/SWD]
3	01183-06025		BOLT	ﾎﾞﾙﾄ	1	[RRE][RRE/SWD]
4	216G2-43711		UNIT,FLASHER	ﾌﾗｯｼｬﾕﾆｯﾄ	1	
5	214A2-42621		SCREW	ｽｸﾘｭ	3	
6	235C2-40301		BOX,FUSE	ﾎﾞｯｸｽ	1	INC.7,8
7	214T2-42311		FUSE,10A	ﾋｭｰｽﾞ	7	
8	214T2-42321		FUSE,30A	ﾋｭｰｽﾞ	1	
9	217G2-42301		RELAY,STARTER	ﾘﾚｰ	1	
10	21152-42013		TIMER,QOS-3	ﾀｲﾏ	1	
11	21152-42021		RELAY,GLOW-PLUG	ﾘﾚｰ	1	
12	214A2-42611		SCREW	ｽｸﾘｭ	4	
13	216G2-42312		SWITCH,STARTER	ｽｲｯﾁ	1	
-	24352-42521		SWITCH,STARTER	ｽｲｯﾁ	1	[SWD][RRE/SWD]
14	534A7-72001		WIRE,LEAD	ﾜｲﾔ	1	[SWD][RRE/SWD]
15	218G2-42001		BRACKET,ELECTRIC	ﾌﾞﾗｹｯﾄ	1	
16	26062-42881		RELAY,12V	ﾘﾚｰ	2	
17	239A5-42381		BOLT	ﾎﾞﾙﾄ	2	
18	01400-00006		NUT	ﾅｯﾄ	2	
19	01185-08016		BOLT	ﾎﾞﾙﾄ	1	
-	01183-06016		BOLT	ﾎﾞﾙﾄ	2	[RRE][RRE/SWD]

FIG.23 ELECTRIC PARTS (2/2)(G-TYPE)

(F5012470) エレクトリックパーツ(2/2)

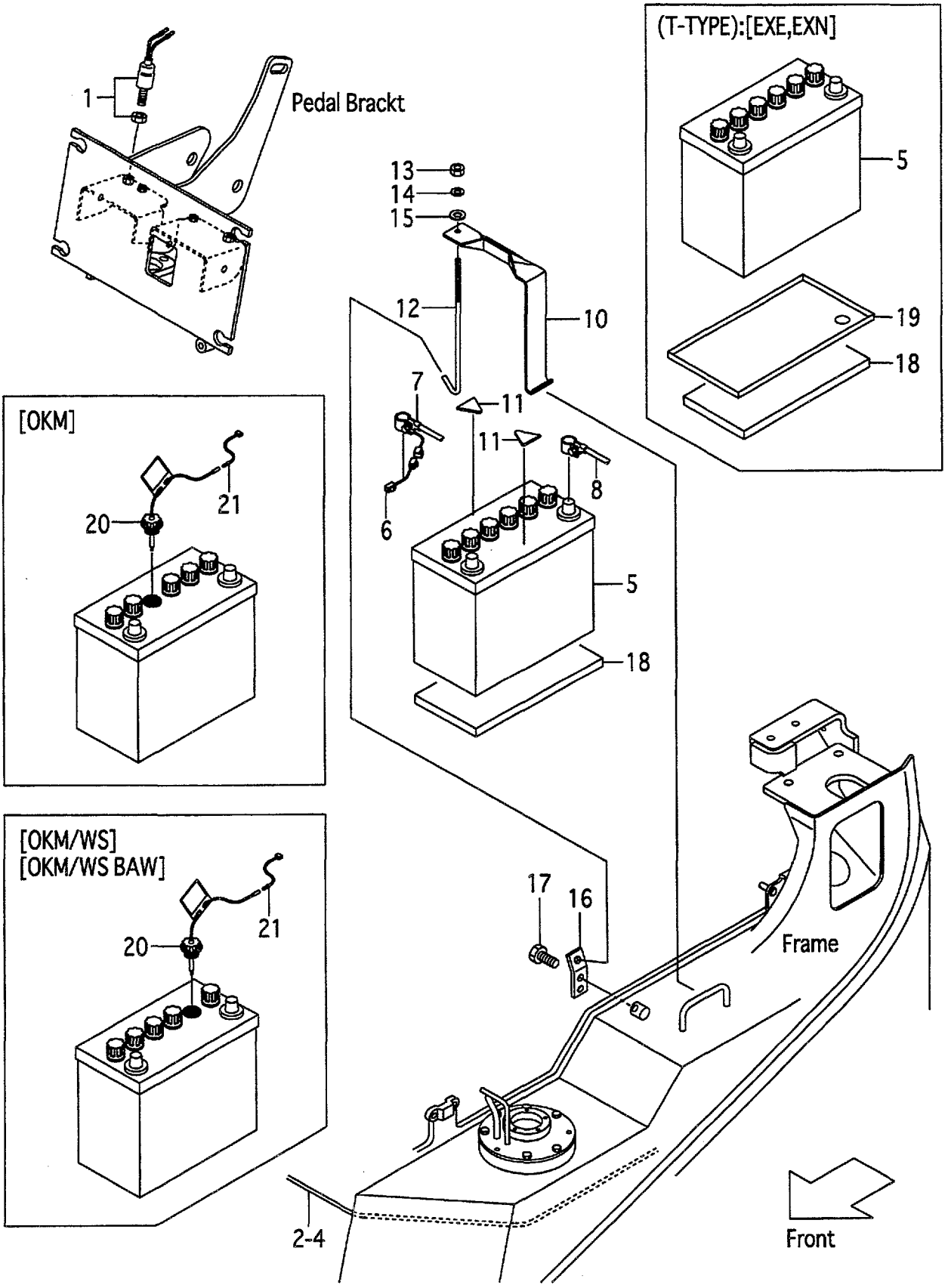

A:FG10C19 FG15C19 FG18C19
B:FG10T19 FG15T19 FG18T19

FIG.23
(F5012470)

Item No	Part No.	Mark	Description		Req'd	Remarks : Serial No.
1	23232-42072		SWITCH,STOP-LAMP	ｽｲｯﾁ	1	
2	237A2-42211		WIRE-HARNESS,ENGINE	ﾜｲﾔﾊｰﾈｽ	1	A:1-10083
-	237A2-42212		WIRE-HARNESS,ENGINE	ﾜｲﾔﾊｰﾈｽ	1	A:10084-
-	237B2-42211		WIRE-HARNESS,ENGINE	ﾜｲﾔﾊｰﾈｽ	1	B:1-10083
-	237B2-42212		WIRE-HARNESS,ENGINE	ﾜｲﾔﾊｰﾈｽ	1	B:10084-
-	537A3-72021		WIRE-HARNESS,ENGINE	ﾜｲﾔﾊｰﾈｽ	1	A
						[FC]
-	537B3-72021		WIRE-HARNESS,ENGINE	ﾜｲﾔﾊｰﾈｽ	1	B
						[FC]
3	214A2-42331		CLIP	ｸﾘｯﾌﾟ	3	
4	230C2-42201		DIODE,3A	ﾀﾞｲｵｰﾄﾞ	2	B
5	225R2-42001		BATTERY,WET,55B24R	ﾊﾞｯﾃﾘ	1	
-	217G2-42051		BATTERY,WET,65D23R	ﾊﾞｯﾃﾘ	1	[WS]
6	25592-42081		WIRE,FUSIBLE-LINK	ﾜｲﾔ	1	
7	237A2-42151		CABLE,BATTERY(+)	ｹｰﾌﾞﾙ	1	
-	217G2-42151		CABLE,BATTERY(+)	ｹｰﾌﾞﾙ	1	[WS]
-	216G2-43151		CABLE,BATTERY(+)	ｹｰﾌﾞﾙ	1	B
						[EXE][EXN]
8	212T2-42311		CABLE,BATTERY(-)	ｹｰﾌﾞﾙ	1	
-	238A2-42151		CABLE,BATTERY(-)	ｹｰﾌﾞﾙ	1	[WS]
-	536G3-82201		CABLE,BATTERY(-)	ｹｰﾌﾞﾙ	1	B
						[EXE][EXN]
9	516G3-82521	+	TERMINAL,BATTERY	ﾀｰﾐﾅﾙ	1	B
						[EXE][EXN]
10	216G2-42071		HOLDER,BATTERY	ﾎﾙﾀﾞ	1	
-	217G2-42021		HOLDER,BATTERY	ﾎﾙﾀﾞ	1	[WS]
11	216G2-43111		RUBBER	ﾗﾊﾞｰ	2	
12	256A2-42171		BOLT,ANCHOR	ﾎﾞﾙﾄ	1	
13	01420-00006		NUT	ﾅｯﾄ	1	
14	02010-00006		WASHER	ﾜｯｼｬ	1	
15	23452-42181		WASHER	ﾜｯｼｬ	1	
16	218G2-42101		HOOK,ANCHOR-BOLT	ﾌｯｸ	1	
-	239A2-42101		HOOK,ANCHOR-BOLT	ﾌｯｸ	1	[WS]
17	01185-08016		BOLT	ﾎﾞﾙﾄ	1	
18	239A2-42031		RUBBER	ﾗﾊﾞｰ	1	
19	518G2-72121		CASE,BATTERY	ｹｰｽ	1	B
						[EXE][EXN]
20	522A7-12211		CAP,BATTERY	ｷｬｯﾌﾟ	1	[OKM]
-	521A2-42001		CAP,BATTERY	ｷｬｯﾌﾟ	1	[OKM/WS]
21	539A6-22021		WIRE,LEAD	ﾜｲﾔ	1	[OKM][OKM/WS]

FIG.24 ELECTRIC PARTS (2/2)(D-TYPE)

(F5012480) エレクトリックパーツ(2/2)

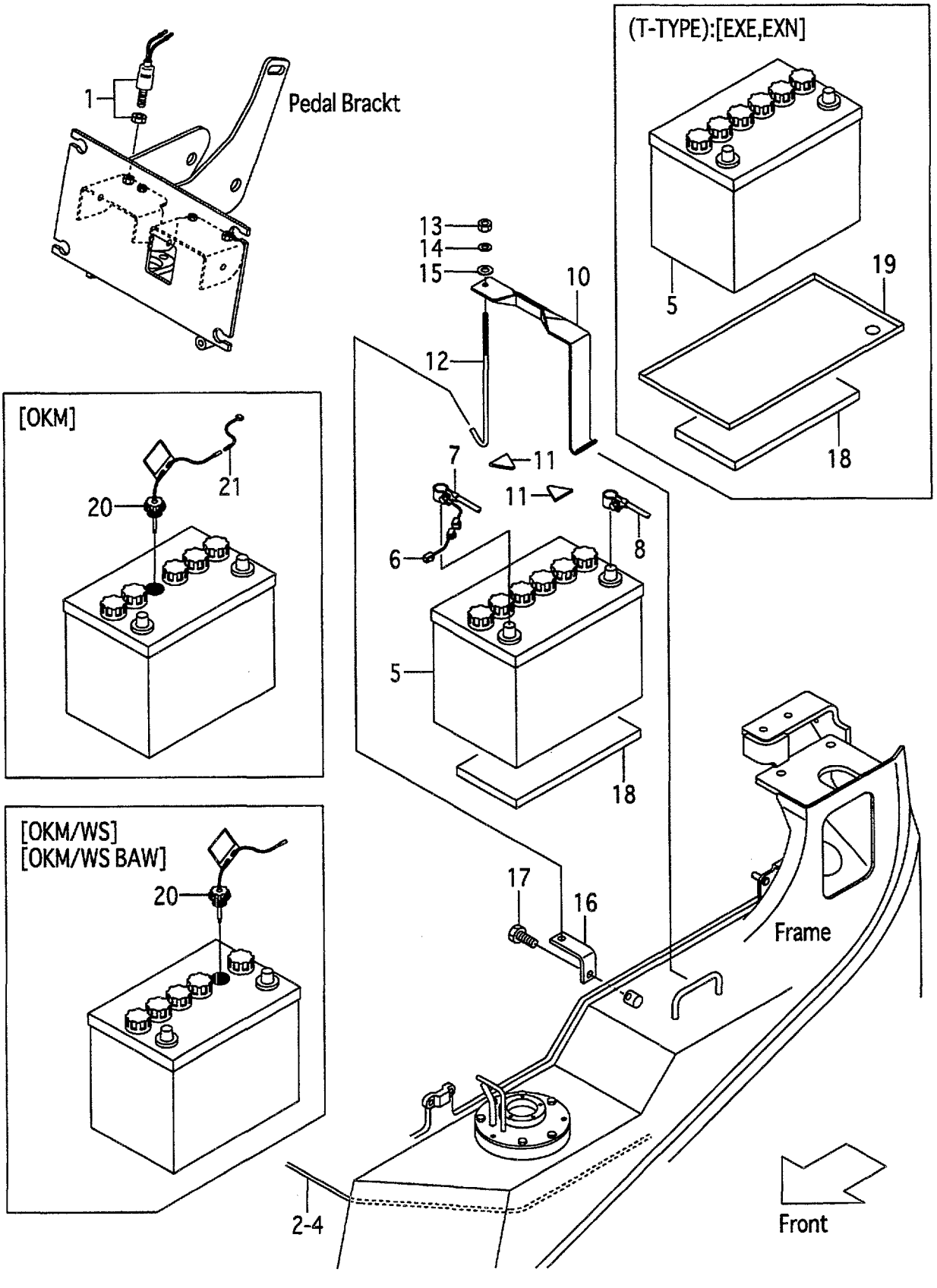

A:FD10C19 FD15C19 FD18C19
B:FD10T19 FD15T19 FD18T19

FIG.24
(F5012480)

Item No	Part No.	Mark	Description		Req'd	Remarks : Serial No.
1	23232-42072		SWITCH,STOP-LAMP	ｽｲｯﾁ	1	
2	238A2-42211		WIRE-HARNESS,ENGINE	ﾜｲﾔﾊｰﾈｽ	1	A
-	238B2-42211		WIRE-HARNESS,ENGINE	ﾜｲﾔﾊｰﾈｽ	1	B
-	538A3-72021		WIRE-HARNESS,ENGINE	ﾜｲﾔﾊｰﾈｽ	1	A [FC]
-	538B3-72021		WIRE-HARNESS,ENGINE	ﾜｲﾔﾊｰﾈｽ	1	B [FC]
3	214A2-42331		CLIP	ｸﾘｯﾌﾟ	3	
4	230C2-42201		DIODE,3A	ﾀﾞｲｵｰﾄﾞ	2	B
5	217G2-42051		BATTERY,WET,65D23R	ﾊﾞｯﾃﾘ	1	
-	534A7-02001		BATTERY,WET,115D31R	ﾊﾞｯﾃﾘ	1	[WS]
6	25592-42081		WIRE,FUSIBLE-LINK	ﾜｲﾔ	1	
7	217G2-42151		CABLE,BATTERY(+)	ｹｰﾌﾞﾙ	1	
8	238A2-42151		CABLE,BATTERY(-)	ｹｰﾌﾞﾙ	1	
-	538G3-82201		CABLE,BATTERY(-)	ｹｰﾌﾞﾙ	1	[EXE][EXN]
9	530C3-82361	+	TERMINAL,BATTERY	ﾀｰﾐﾅﾙ	1	[EXE][EXN]
10	217G2-42021		HOLDER,BATTERY	ﾎﾙﾀﾞ	1	
11	216G2-43111		RUBBER	ﾗﾊﾞｰ	2	
12	256A2-42171		BOLT,ANCHOR	ﾎﾞﾙﾄ	1	
13	01420-00006		NUT	ﾅｯﾄ	1	
14	02010-00006		WASHER	ﾜｯｼｬ	1	
15	23452-42181		WASHER	ﾜｯｼｬ	1	
16	239A2-42101		HOOK,ANCHOR-BOLT	ﾌｯｸ	1	
17	01185-08016		BOLT	ﾎﾞﾙﾄ	1	
18	239A2-42031		RUBBER	ﾗﾊﾞｰ	1	
19	539A2-72121		CASE,BATTERY	ｹｰｽ	1	B [EXE][EXN]
20	521A2-42001		CAP,BATTERY	ｷｬｯﾌﾟ	1	[OKM]
-	522A2-42001		CAP,BATTERY	ｷｬｯﾌﾟ	1	[OKM/WS]
21	539A6-22021		WIRE,LEAD	ﾜｲﾔ	1	[OKM](WITHOUT OKM/WS)

FIG.25 LIGHT UNIT

(F5012490) ライトユニット

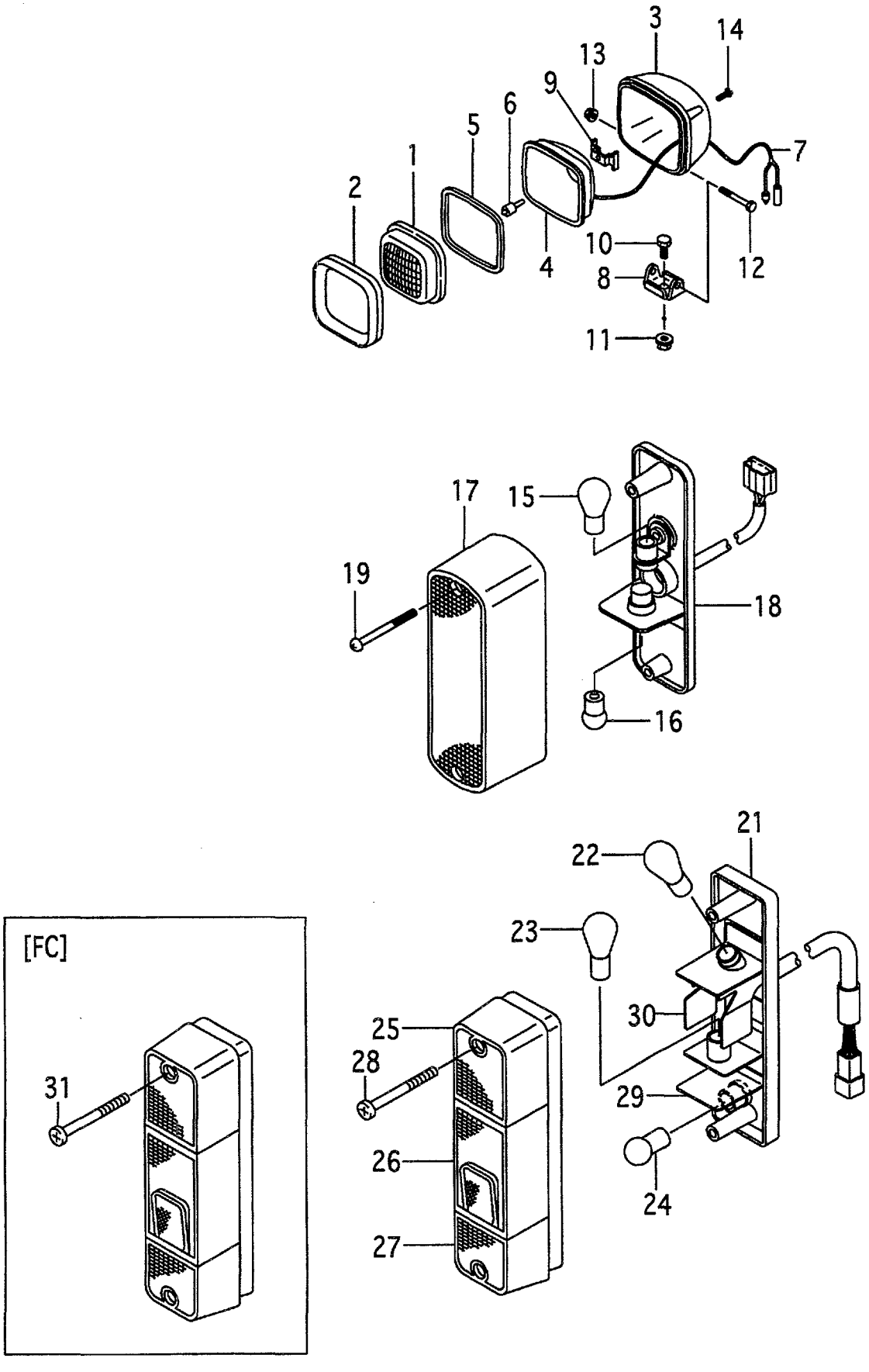

A:FG10C19 FG10T19 FG15C19 FG15T19 FG18C19 FG18T19
B:FD10C19 FD10T19 FD15C19 FD15T19 FD18C19 FD18T19

Item No	Part No.	Mark	Description		Req'd	Remarks : Serial No.
A1	216G2-40602		LAMP-ASSY,HEAD	ﾍｯﾄﾞﾗﾝﾌﾟｱｯｾﾝ	2	INC.1-14
1	216G2-43502		LENS	ﾚﾝｽﾞ	2	
2	216G2-43631		RIM	ﾘﾑ	2	
3	NO PART NO.	#	HOUSING	ﾊｳｼﾞﾝｸﾞ	2	
4	NO PART NO.	#	REFLECTOR	ﾘﾌﾚｸﾀ	2	
5	216G2-43531		GASKET	ｶﾞｽｹｯﾄ	2	
6	216G2-43542		BULB,12V/55W	ﾊﾞﾙﾌﾞ	2	
7	216G2-43551		WIRE,LEAD	ﾜｲﾔ	2	
8	216G2-43562		BRACKET	ﾌﾞﾗｹｯﾄ	2	
9	216G2-43571		SPRING	ｽﾌﾟﾘﾝｸﾞ	2	
10	216G2-43582		BOLT	ﾎﾞﾙﾄ	2	
11	216G2-43592		NUT	ﾅｯﾄ	2	
12	216G2-43602		BOLT	ﾎﾞﾙﾄ	2	
13	216G2-43611		NUT	ﾅｯﾄ	2	
14	216G2-43622		SCREW	ｽｸﾘｭ	8	
A2	216G2-40701		LAMP-ASSY,FRONT-COMI	ﾌﾛﾝﾄｺﾝﾋﾞﾈｰｼｮﾝﾗﾝﾌﾟｱｯｾﾝ	2	INC.15-19
15	216G2-40711		BULB,12V/27W	ﾊﾞﾙﾌﾞ	2	
16	216G2-40721		BULB,12V/10W	ﾊﾞﾙﾌﾞ	2	
17	216G2-40731		LENS	ﾚﾝｽﾞ	2	
18	NO PART NO.	#	BODY	ﾎﾞﾃﾞｨ	2	
19	NO PART NO.		SCREW	ｽｸﾘｭ	4	
20	239A2-42221	+	WIRE-HARNESS,H.GUARD	ﾜｲﾔﾊｰﾈｽ	2	
-	534A9-22211	+	WIRE-HARNESS,H.GUARD	ﾜｲﾔﾊｰﾈｽ	2	[HL][BKH]
A3	214A2-40203		LAMP-ASSY,REAR-COMB.	ﾘﾔｰｺﾝﾋﾞﾈｰｼｮﾝﾗﾝﾌﾟｱｯｾﾝ	2	INC.21-30
21	NO PART NO.	#	BODY	ﾎﾞﾃﾞｨ	2	
22	210F2-42011		BULB,12V/23W	ﾊﾞﾙﾌﾞ	2	
23	214A2-44501		BULB,12V/23,8W	ﾊﾞﾙﾌﾞ	2	(OLD PARTS)
-	210F2-42021		BULB,12V/23,8W	ﾊﾞﾙﾌﾞ	2	(NEW PARTS)
24	210F2-42031		BULB,12V/10W	ﾊﾞﾙﾌﾞ	2	
25	210F2-42201		LENS,PLASTIC	ﾚﾝｽﾞ	2	
26	210F2-42211		LENS,PLASTIC	ﾚﾝｽﾞ	2	
27	210F2-42221		LENS,PLASTIC	ﾚﾝｽﾞ	2	
28	01030-05065		SCREW	ｽｸﾘｭ	4	(WITHOUT FC)
29	210F2-42231		SHADE	ｼｪｰﾄﾞ	2	
30	214A2-44511		SHADE	ｼｪｰﾄﾞ	2	
31	514A3-72091		BOLT,PAN-HEAD	ﾎﾞﾙﾄ	4	[FC]

FIG.26 LICENSE LIGHT

(F50124A0) ライセンスライト

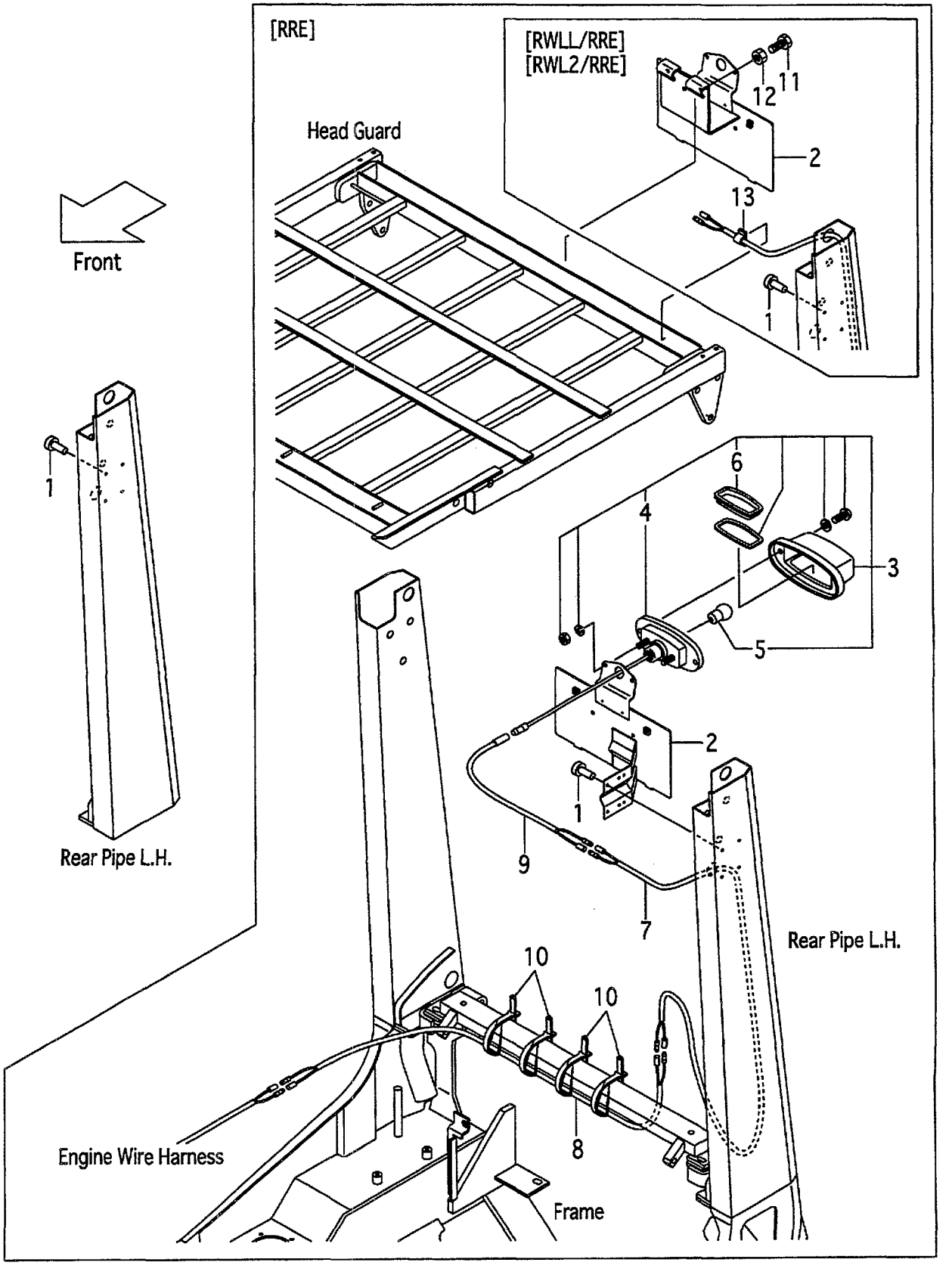

A:FG10C19 FG10T19 FG15C19 FG15T19 FG18C19 FG18T19
B:FD10C19 FD10T19 FD15C19 FD15T19 FD18C19 FD18T19

Item No	Part No.	Mark	Description	Req'd	Remarks : Serial No.
1	25596-42361		RIVET,NYLON リベット	4	
-	22256-42001		RIVET リベット	4	[RRE][RWLL/RRE][RWL2/RRE]
2	509P9-90101		BRACKET,NUMBER-PLATE ブラケット	1	[RRE]
-	533A0-52051		BRACKET,NUMBER-PLATE ブラケット	1	[RWLL/RRE][RWL2/RRE]
3	22132-40202		LAMP,LICENCE ランプ	1	[RRE][RWLL/RRE][RWL2/RRE] INC.4-6
4	NO PART NO.	#	BODY ボディ	1	[RRE][RWLL/RRE][RWL2/RRE]
5	22132-40041		BULB,12V/10W バルブ	1	[RRE][RWLL/RRE][RWL2/RRE]
6	22192-42411		LENS,PLASTIC レンズ	1	[RRE][RWLL/RRE][RWL2/RRE]
7	516G9-92101		WIRE-HARNESS,LICENCE ワイヤハーネス	1	[RRE]
-	534A9-92131		WIRE-HARNESS,LICENCE ワイヤハーネス	1	[RWLL/RRE][RWL2/RRE]
8	558A9-92001		WIRE-HARNESS,LICENCE ワイヤハーネス	1	[RRE][RWLL/RRE][RWL2/RRE]
9	222A2-42511		WIRE,LEAD ワイヤ	1	[RRE][RWLL/RRE][RWL2/RRE]
10	04913-11120		BAND バンド	4	[RRE][RWLL/RRE][RWL2/RRE]
11	01100-08020		BOLT ボルト	3	[RWLL/RRE][RWL2/RRE]
12	01400-00008		NUT ナット	3	[RWLL/RRE][RWL2/RRE]
13	27732-42311		CLAMP,HARNESS クランプ	1	[RWLL/RRE][RWL2/RRE]

FIG.27 REAR WORKING LIGHT [RWLR]

(F50124B0) リヤーワーキング'ライト

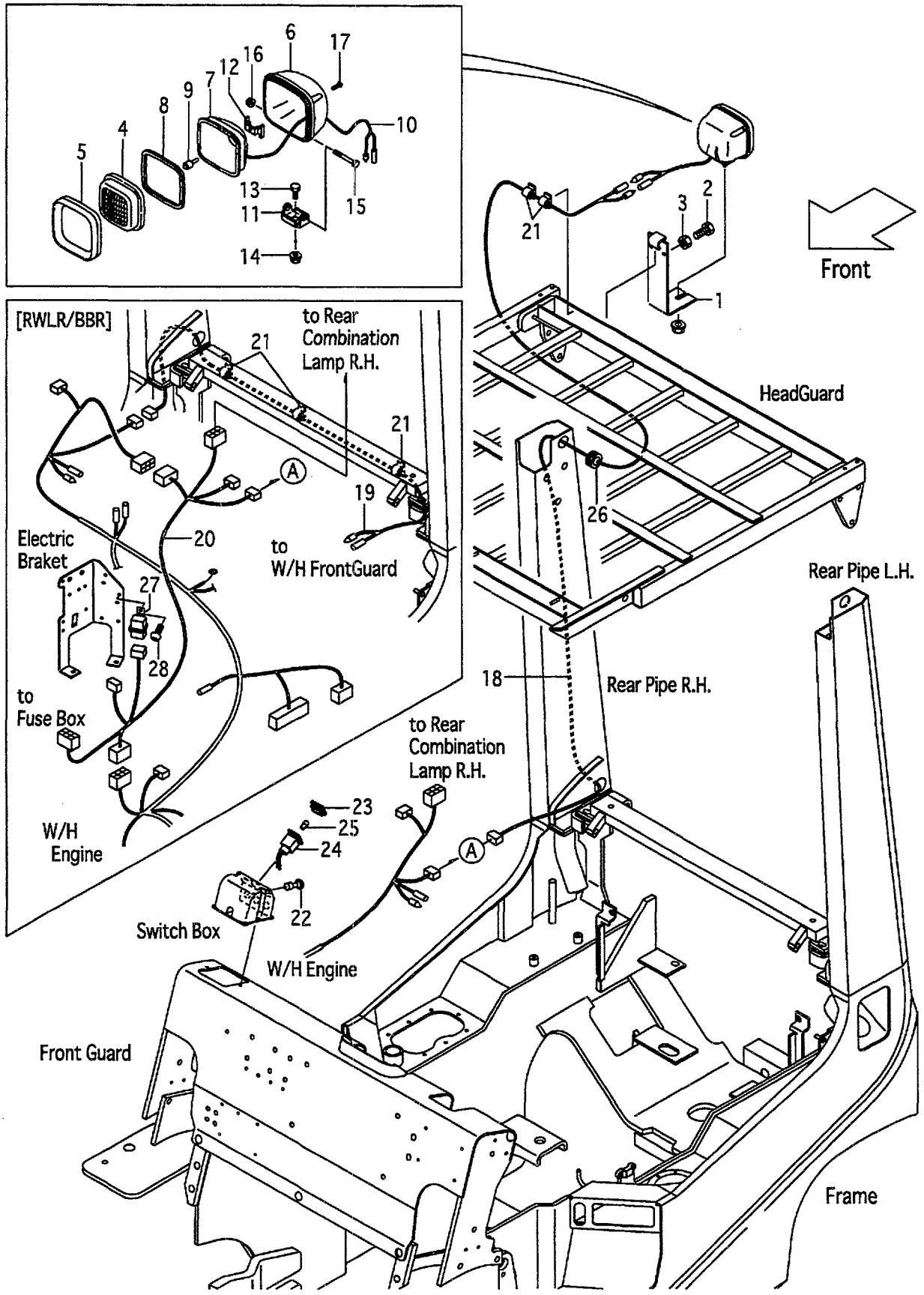

FIG.27
(F50124B0)

A:FG10C19 FG10T19 FG15C19 FG15T19 FG18C19 FG18T19
B:FD10C19 FD10T19 FD15C19 FD15T19 FD18C19 FD18T19

Item No	Part No.	Mark	Description		Req'd	Remarks : Serial No.
1	516G1-42151		BRACKET,REAR-LAMP	ﾌﾞﾗｹｯﾄ	1	[RWLR]
-	539A1-42201		BRACKET,REAR-LAMP	ﾌﾞﾗｹｯﾄ	1	[RWLR/AW061]
2	01100-08020		BOLT	ﾎﾞﾙﾄ	3	[RWLR]
3	01400-00008		NUT	ﾅｯﾄ	3	[RWLR]
A1	216G2-40602		LAMP-ASSY,HEAD	ﾍｯﾄﾞﾗﾝﾌﾟｱｯｾﾝ	1	[RWLR] INC.4-17
4	216G2-43502		LENS	ﾚﾝｽﾞ	1	[RWLR]
5	216G2-43631		RIM	ﾘﾑ	1	[RWLR]
6	NO PART NO.	#	HOUSING	ﾊｳｼﾞﾝｸﾞ	1	[RWLR]
7	NO PART NO.	#	REFLECTOR	ﾘﾌﾚｸﾀ	1	[RWLR]
8	216G2-43531		GASKET	ｶﾞｽｹｯﾄ	1	[RWLR]
9	216G2-43542		BULB,12V/55W	ﾊﾞﾙﾌﾞ	1	[RWLR]
10	216G2-43551		WIRE,LEAD	ﾜｲﾔ	1	[RWLR]
11	216G2-43562		BRACKET	ﾌﾞﾗｹｯﾄ	1	[RWLR]
12	216G2-43571		SPRING	ｽﾌﾟﾘﾝｸﾞ	1	[RWLR]
13	216G2-43582		BOLT	ﾎﾞﾙﾄ	1	[RWLR]
14	216G2-43592		NUT	ﾅｯﾄ	1	[RWLR]
15	216G2-43602		BOLT	ﾎﾞﾙﾄ	1	[RWLR]
16	216G2-43611		NUT	ﾅｯﾄ	1	[RWLR]
17	216G2-43622		SCREW	ｽｸﾘｭ	4	[RWLR]
18	516G1-42101		WIRE,LEAD	ﾜｲﾔ	1	[RWLR]
19	516G1-42111		WIRE,LEAD	ﾜｲﾔ	1	[RWLR/BBR]
20	539A8-92111		WIRE,LEAD	ﾜｲﾔ	1	[RWLR/BBR]
21	27732-42311		CLAMP,HARNESS	ｸﾗﾝﾌﾟ	2	[RWLR]
-	27732-42311		CLAMP,HARNESS	ｸﾗﾝﾌﾟ	5	[RWLR/BBR]
22	22672-42501		SWITCH,LAMP	ｽｲｯﾁ	1	[RWLR]
A2	522A1-42051		LAMP-ASSY,PILOT	ﾊﾟｲﾛｯﾄﾗﾝﾌﾟｱｯｾﾝ	1	[RWLR] INC.23-25
23	522A1-42061		LENS	ﾚﾝｽﾞ	1	[RWLR]
24	NO PART NO.	#	HOLDER	ﾎﾙﾀﾞ	1	[RWLR]
25	23302-42311		BULB,12V/3.4W	ﾊﾞﾙﾌﾞ	1	[RWLR]
26	22679-47301		GROMMET	ｸﾞﾛﾒｯﾄ	1	[RWLR]
27	26062-42881		RELAY,12V	ﾘﾚｰ	1	[RWLR/BBR]
28	214A2-42611		SCREW	ｽｸﾘｭ	1	[RWLR/BBR]

FIG.28 REAR WORKING LIGHT [RWLL]

(F50124C0) リヤーワーキング゛ライト

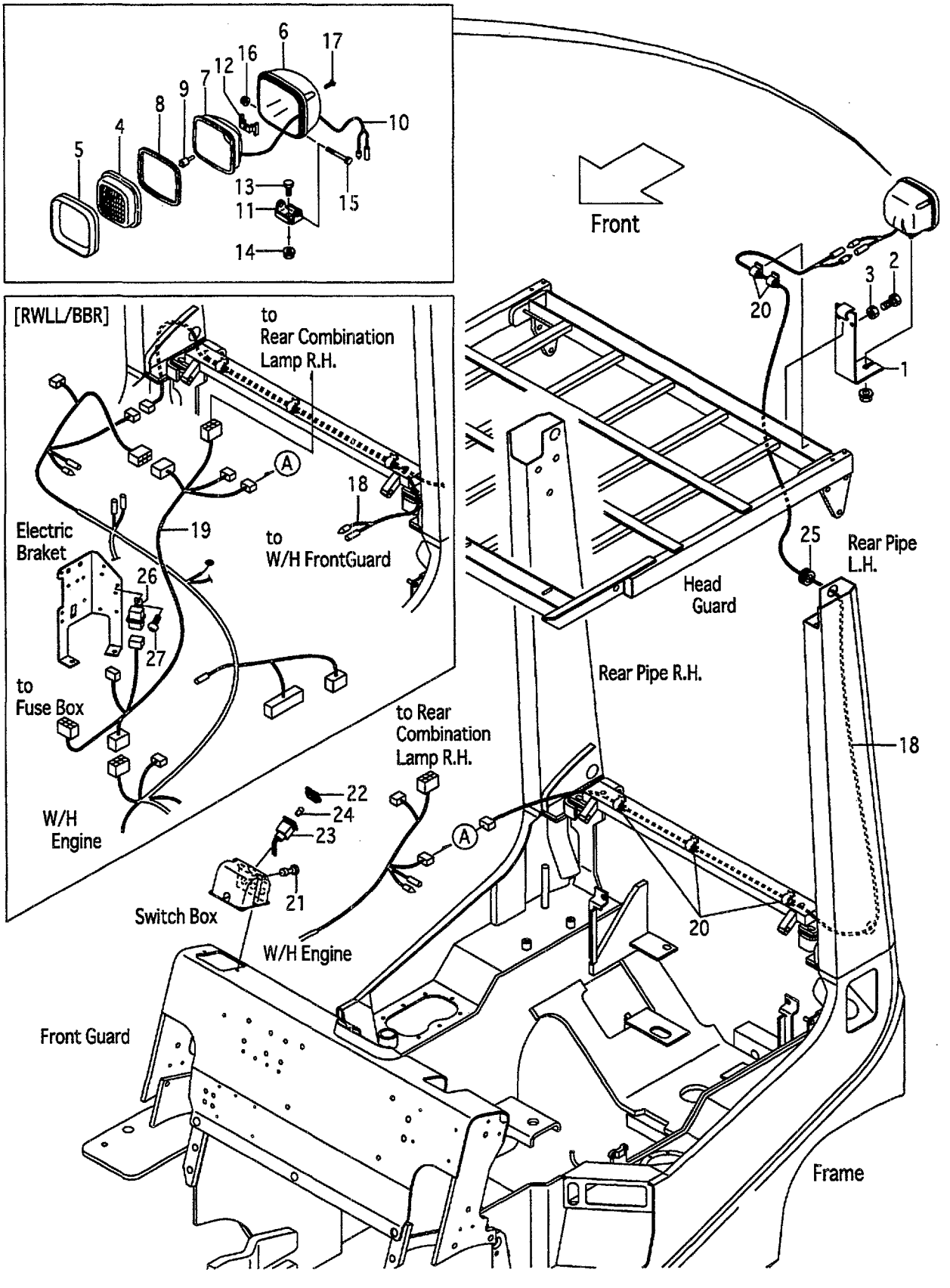

A:FG10C19 FG10T19 FG15C19 FG15T19 FG18C19 FG18T19
B:FD10C19 FD10T19 FD15C19 FD15T19 FD18C19 FD18T19

Item No	Part No.	Mark	Description		Req'd	Remarks : Serial No.
1	516G1-42151		BRACKET,REAR-LAMP	ﾌﾞﾗｹｯﾄ	1	[RWLL]
-	539A1-42201		BRACKET,REAR-LAMP	ﾌﾞﾗｹｯﾄ	1	[RWLL/AW061]
2	01100-08020		BOLT	ﾎﾞﾙﾄ	3	[RWLL]
3	01400-00008		NUT	ﾅｯﾄ	3	[RWLL]
A1	216G2-40602		LAMP-ASSY,HEAD	ﾍｯﾄﾞﾗﾝﾌﾟｱｯｾﾝ	1	[RWLL] INC.4-17
4	216G2-43502		LENS	ﾚﾝｽﾞ	1	[RWLL]
5	216G2-43631		RIM	ﾘﾑ	1	[RWLL]
6	NO PART NO.	#	HOUSING	ﾊｳｼﾞﾝｸﾞ	1	[RWLL]
7	NO PART NO.	#	REFLECTOR	ﾘﾌﾚｸﾀ	1	[RWLL]
8	216G2-43531		GASKET	ｶﾞｽｹｯﾄ	1	[RWLL]
9	216G2-43542		BULB,12V/55W	ﾊﾞﾙﾌﾞ	1	[RWLL]
10	216G2-43551		WIRE,LEAD	ﾜｲﾔ	1	[RWLL]
11	216G2-43562		BRACKET	ﾌﾞﾗｹｯﾄ	1	[RWLL]
12	216G2-43571		SPRING	ｽﾌﾟﾘﾝｸﾞ	1	[RWLL]
13	216G2-43582		BOLT	ﾎﾞﾙﾄ	1	[RWLL]
14	216G2-43592		NUT	ﾅｯﾄ	1	[RWLL]
15	216G2-43602		BOLT	ﾎﾞﾙﾄ	1	[RWLL]
16	216G2-43611		NUT	ﾅｯﾄ	1	[RWLL]
17	216G2-43622		SCREW	ｽｸﾘｭ	4	[RWLL]
18	516G1-42111		WIRE,LEAD	ﾜｲﾔ	1	[RWLL]
-	516G1-42111		WIRE,LEAD	ﾜｲﾔ	2	[RWLL/BBR]
19	539A8-92111		WIRE,LEAD	ﾜｲﾔ	1	[RWLL/BBR]
20	27732-42311		CLAMP,HARNESS	ｸﾗﾝﾌﾟ	5	[RWLL]
21	22672-42501		SWITCH,LAMP	ｽｲｯﾁ	1	[RWLL]
A2	522A1-42051		LAMP-ASSY,PILOT	ﾊﾟｲﾛｯﾄﾗﾝﾌﾟｱｯｾﾝ	1	[RWLL] INC.22-24
22	522A1-42061		LENS	ﾚﾝｽﾞ	1	[RWLL]
23	NO PART NO.	#	HOLDER	ﾎﾙﾀﾞ	1	[RWLL]
24	23302-42311		BULB,12V/3.4W	ﾊﾞﾙﾌﾞ	1	[RWLL]
25	22679-47301		GROMMET	ｸﾞﾛﾒｯﾄ	1	[RWLL]
26	26062-42881		RELAY,12V	ﾘﾚｰ	1	[RWLL/BBR]
27	214A2-42611		SCREW	ｽｸﾘｭ	1	[RWLL/BBR]

FIG.29 REAR WORKING LIGHT [RWL2]

(F50124D0) リヤーワーキング'ライト

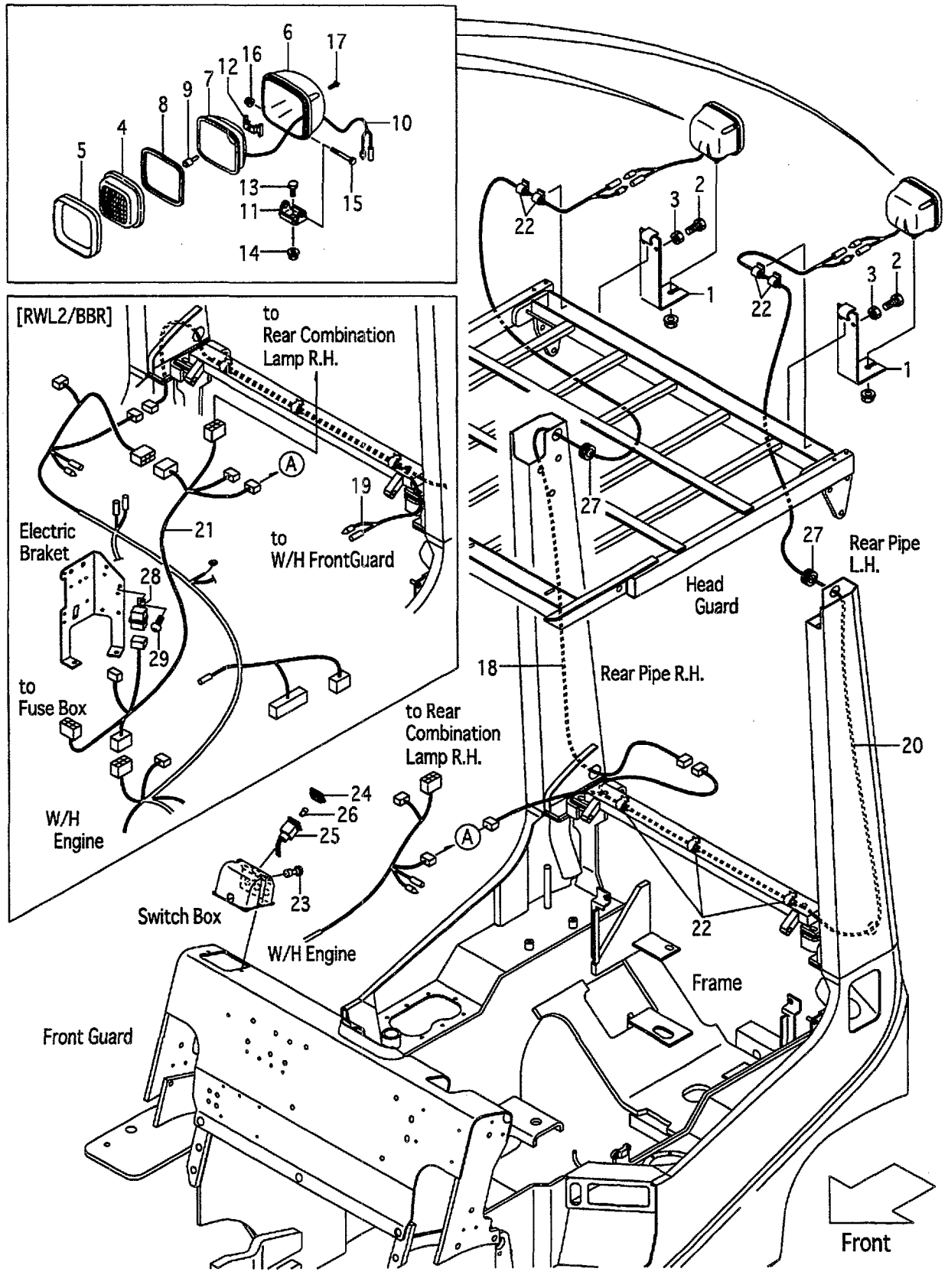

A:FG10C19 FG10T19 FG15C19 FG15T19 FG18C19 FG18T19
B:FD10C19 FD10T19 FD15C19 FD15T19 FD18C19 FD18T19

Item No	Part No.	Mark	Description		Req'd	Remarks : Serial No.
1	516G1-42151		BRACKET,REAR-LAMP	ﾌﾞﾗｹｯﾄ	2	[RWL2]
-	539A1-42201		BRACKET,REAR-LAMP	ﾌﾞﾗｹｯﾄ	2	[RWL2/AW061]
2	01100-08020		BOLT	ﾎﾞﾙﾄ	6	[RWL2]
3	01400-00008		NUT	ﾅｯﾄ	6	[RWL2]
A1	216G2-40602		LAMP-ASSY,HEAD	ﾍｯﾄﾞﾗﾝﾌﾟｱｯｾﾝ	2	[RWL2] INC.4-17
4	216G2-43502		LENS	ﾚﾝｽﾞ	2	[RWL2]
5	216G2-43631		RIM	ﾘﾑ	2	[RWL2]
6	NO PART NO.	#	HOUSING	ﾊｳｼﾞﾝｸﾞ	2	[RWL2]
7	NO PART NO.	#	REFLECTOR	ﾘﾌﾚｸﾀ	2	[RWL2]
8	216G2-43531		GASKET	ｶﾞｽｹｯﾄ	2	[RWL2]
9	216G2-43542		BULB,12V/55W	ﾊﾞﾙﾌﾞ	2	[RWL2]
10	216G2-43551		WIRE,LEAD	ﾜｲﾔ	2	[RWL2]
11	216G2-43562		BRACKET	ﾌﾞﾗｹｯﾄ	2	[RWL2]
12	216G2-43571		SPRING	ｽﾌﾟﾘﾝｸﾞ	2	[RWL2]
13	216G2-43582		BOLT	ﾎﾞﾙﾄ	2	[RWL2]
14	216G2-43592		NUT	ﾅｯﾄ	2	[RWL2]
15	216G2-43602		BOLT	ﾎﾞﾙﾄ	2	[RWL2]
16	216G2-43611		NUT	ﾅｯﾄ	2	[RWL2]
17	216G2-43622		SCREW	ｽｸﾘｭ	8	[RWL2]
18	516G1-42101		WIRE,LEAD	ﾜｲﾔ	1	[RWL2]
19	516G1-42111		WIRE,LEAD	ﾜｲﾔ	1	[RWL2/BBR]
20	516G1-42121		WIRE,LEAD	ﾜｲﾔ	1	[RWL2]
21	539A8-92111		WIRE,LEAD	ﾜｲﾔ	1	[RWL2/BBR]
22	27732-42311		CLAMP,HARNESS	ｸﾗﾝﾌﾟ	7	[RWL2]
23	22672-42501		SWITCH,LAMP	ｽｲｯﾁ	1	[RWL2]
A2	522A1-42051		LAMP-ASSY,PILOT	ﾊﾟｲﾛｯﾄﾗﾝﾌﾟｱｯｾﾝ	1	[RWL2] INC.24-26
24	522A1-42061		LENS	ﾚﾝｽﾞ	1	[RWL2]
25	NO PART NO.	#	HOLDER	ﾎﾙﾀﾞ	1	[RWL2]
26	23302-42311		BULB,12V/3.4W	ﾊﾞﾙﾌﾞ	1	[RWL2]
27	22679-47301		GROMMET	ｸﾞﾛﾒｯﾄ	2	[RWL2]
28	26062-42881		RELAY,12V	ﾘﾚｰ	1	[RWL2/BBR]
29	214A2-42611		SCREW	ｽｸﾘｭ	1	[RWL2/BBR]

FIG.30 REVOLVING LIGHT [RLY][RLR]

(F50124E0) ﾘﾎﾞﾙﾋﾞﾝｸﾞﾗｲﾄ

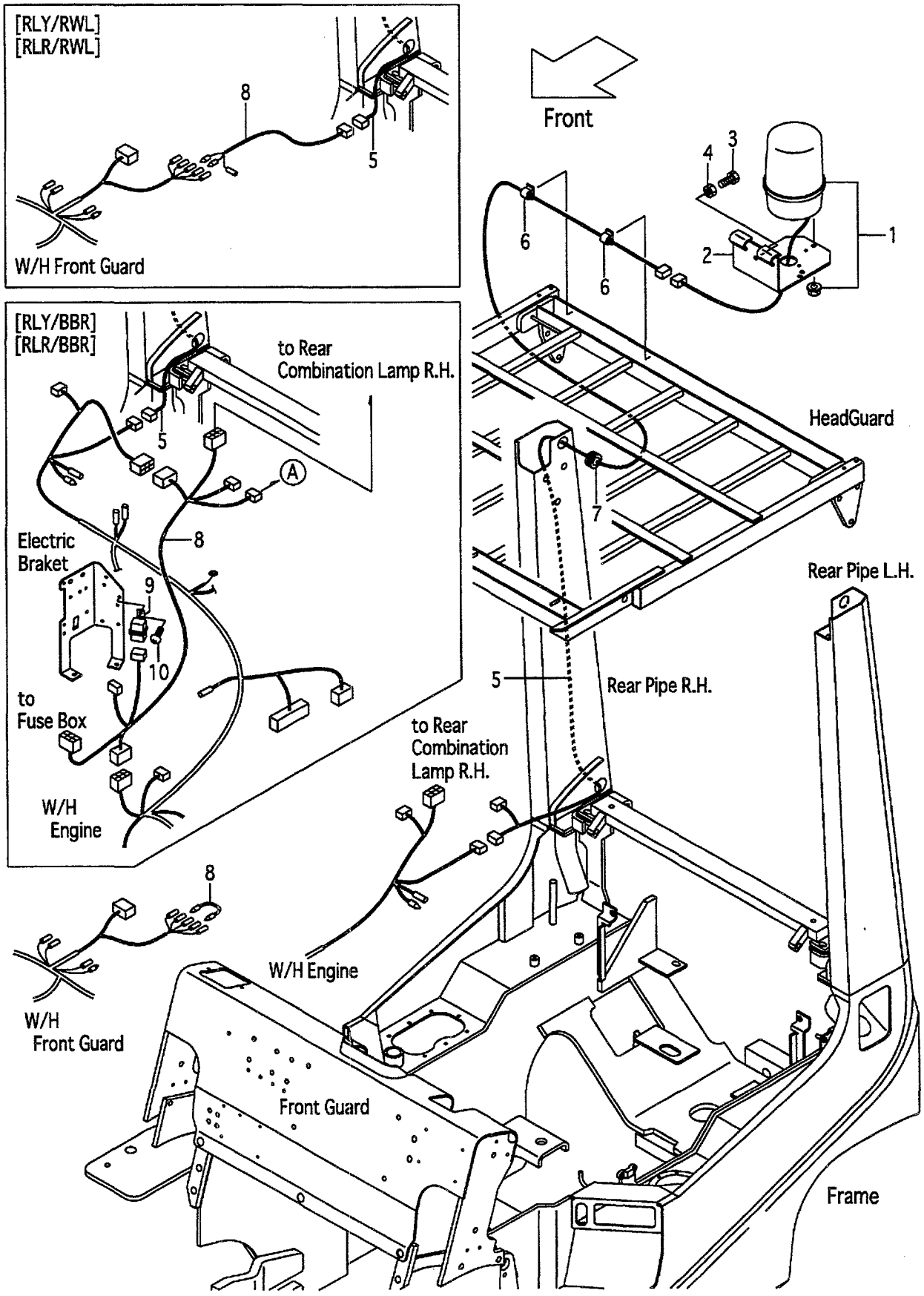

A:FG10C19 FG10T19 FG15C19 FG15T19 FG18C19 FG18T19
B:FD10C19 FD10T19 FD15C19 FD15T19 FD18C19 FD18T19

Item No	Part No.	Mark	Description		Req'd	Remarks : Serial No.
1	514A1-41001		LIGHT,REVOLVING	ﾗｲﾄ	1	[RLYS][RLYS/BKTL]
-	514A1-41011		LIGHT,REVOLVING	ﾗｲﾄ	1	[RLRS][RLRS/BKTL]
-	514A1-41021		LIGHT,REVOLVING	ﾗｲﾄ	1	[RLYM][RLYM/BKTL]
-	514A1-41031		LIGHT,REVOLVING	ﾗｲﾄ	1	[RLRM][RLRM/BKTL]
2	529F1-42251		BRACKET,REVOLVING	ﾌﾞﾗｹｯﾄ	1	[RLY][RLR]
-	529F1-42201		BRACKET,REVOLVING	ﾌﾞﾗｹｯﾄ	1	[RLY/BKTL][RLR/BKTL]
3	01100-08020		BOLT	ﾎﾞﾙﾄ	3	[RLY][RLR]
4	01400-00008		NUT	ﾅｯﾄ	3	[RLY][RLR]
5	516G8-92001		WIRE,LEAD	ﾜｲﾔ	1	[RLY][RLR]
-	514A1-42191		WIRE,LEAD	ﾜｲﾔ	1	[RLY/BBR][RLR/BBR] [RLY/RWL][RLR/RWL]
6	27732-42311		CLAMP,HARNESS	ｸﾗﾝﾌﾟ	2	[RLY][RLR]
7	22679-47301		GROMMET	ｸﾞﾛﾒｯﾄ	1	[RLY][RLR]
8	516G1-42211		WIRE,LEAD	ﾜｲﾔ	1	[RLY][RLR]
-	539A8-92111		WIRE,LEAD	ﾜｲﾔ	1	[RLY/BBR][RLR/BBR]
-	514A1-42041		WIRE,LEAD	ﾜｲﾔ	1	[RLY/RWL][RLR/RWL]
9	26062-42881		RELAY,12V	ﾘﾚｰ	1	[RLY/BBR][RLR/BBR]
10	214A2-42611		SCREW	ｽｸﾘｭ	1	[RLY/BBR][RLR/BBR]

FIG.31 BACK BUZZER

(F50124F0) ﾊﾞｯｸﾌﾞｻﾞｰ

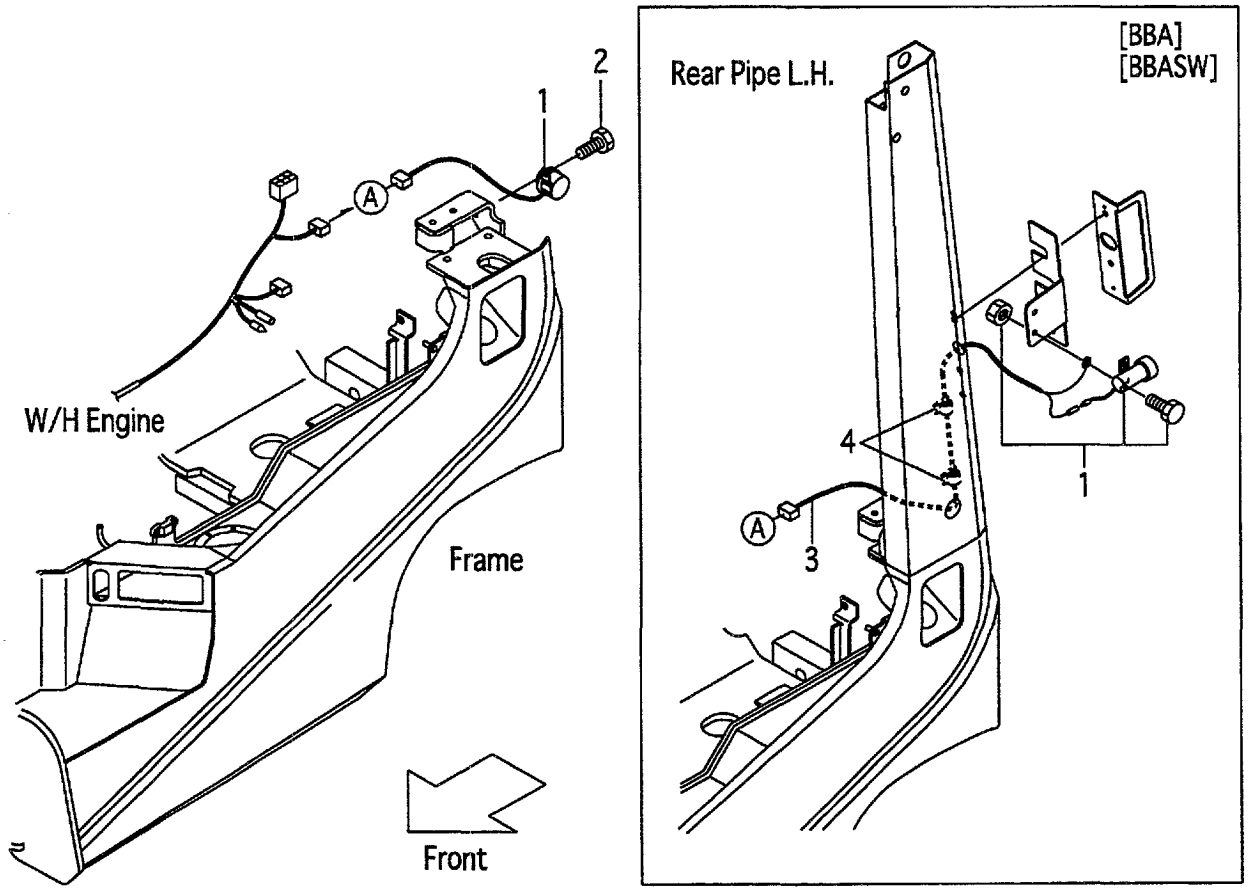

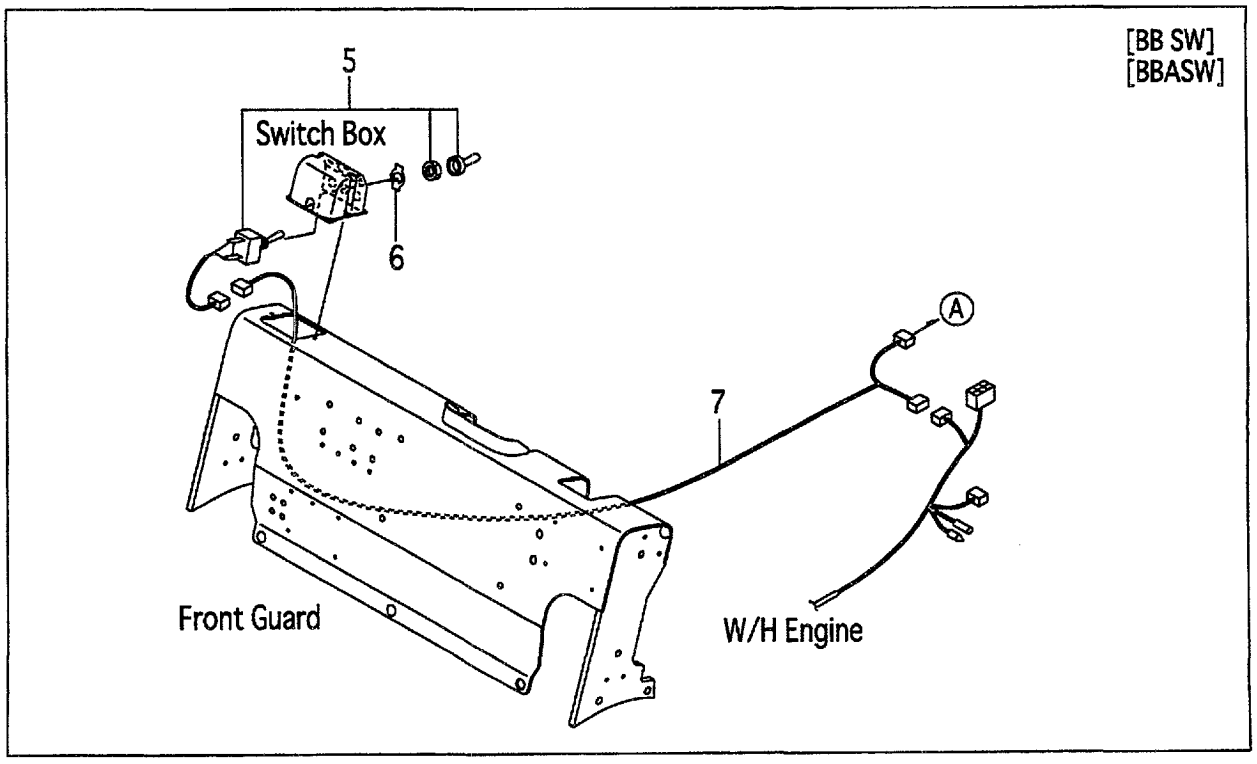

FIG.31
(F50124F0)

A:FG10C19 FG10T19 FG15C19 FG15T19 FG18C19 FG18T19
B:FD10C19 FD10T19 FD15C19 FD15T19 FD18C19 FD18T19

Item No	Part No.	Mark	Description		Req'd	Remarks : Serial No.
1	234A2-42301		BUZZER,BACK,12V	ﾌﾞｻﾞｰ	1	
-	214A2-44001		BUZZER,BACK,12V	ﾌﾞｻﾞｰ	1	[BBA][BBASW]
2	01185-08016		BOLT	ﾎﾞﾙﾄ	1	(WITHOUT BBA,BBASW)
3	516G1-32012		WIRE,LEAD	ﾜｲﾔ	1	[BBA][BBASW]
4	27732-42311		CLAMP,HARNESS	ｸﾗﾝﾌﾟ	2	[BBA][BBASW]
5	57042-72091		SWITCH	ｽｲｯﾁ	1	[BB SW][BBASW]
6	27652-62211		PLATE,SWITCH	ﾌﾟﾚｰﾄ	1	[BB SW][BBASW]
7	516G1-32002		WIRE,LEAD	ﾜｲﾔ	1	[BB SW][BBASW]

FIG.32 HEATER UNIT [HR]

(F50124G0) ヒータユニット

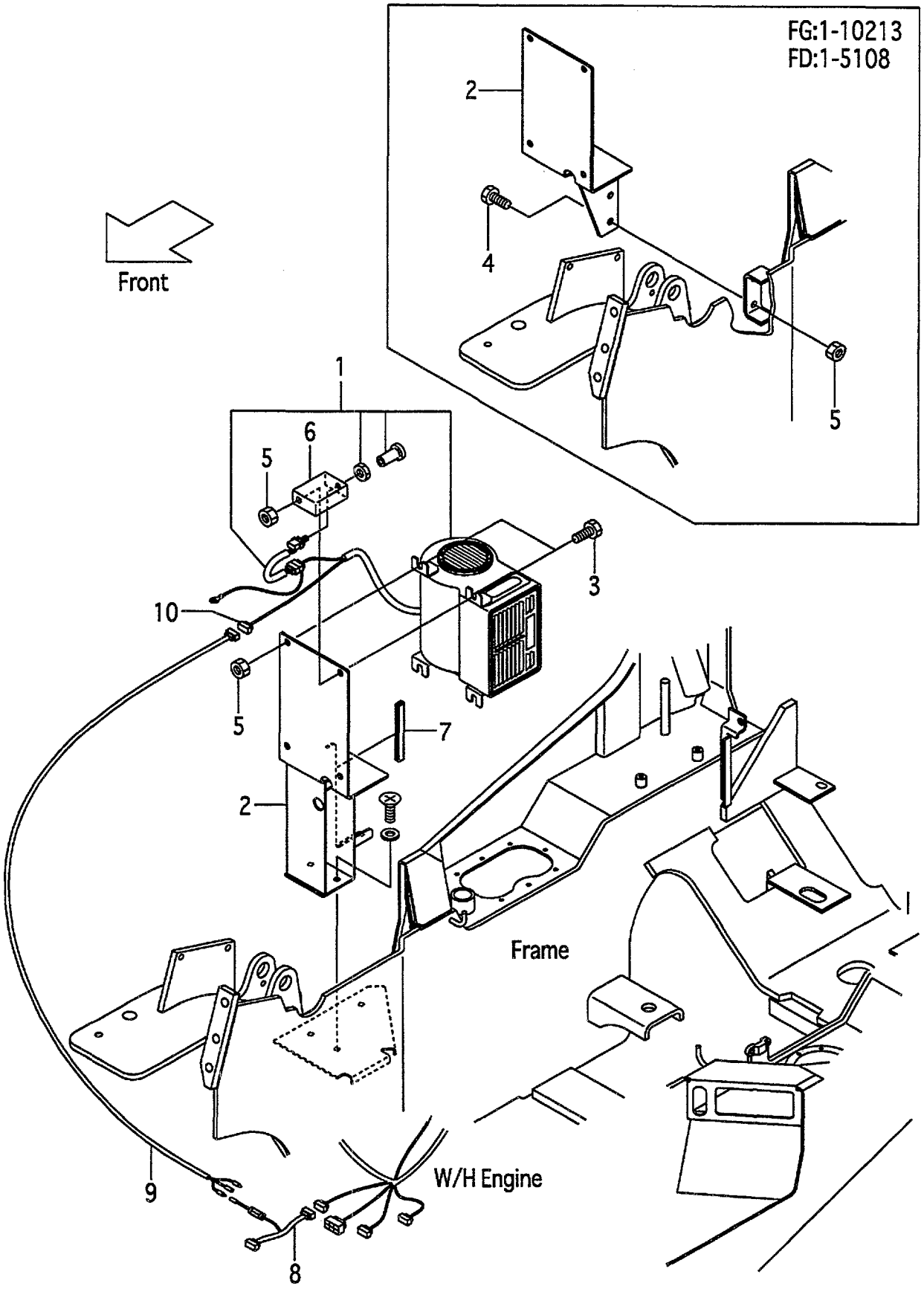

A:FG10C19 FG10T19 FG15C19 FG15T19 FG18C19 FG18T19
B:FD10C19 FD10T19 FD15C19 FD15T19 FD18C19 FD18T19

Item No	Part No.	Mark	Description		Req'd	Remarks : Serial No.
1	514T7-20201		HEATER	ヒータ	1	[HR]
2	539A7-22011		BRACKET,HEATER	ブラケット	1	A:1-10213 B [HR](OLD PART)
-	539A7-22511		BRACKET,HEATER	ブラケット	1	A:10214- B [HR](NEW PART)
3	01186-10020		BOLT	ボルト	4	[HR]
4	01183-10025		BOLT	ボルト	2	A:1-10213 B [HR](OLD PART)
5	01400-00010		NUT	ナット	6	A:1-10213 B [HR](OLD PART)
-	01400-00010		NUT	ナット	4	A:10214- B [HR](NEW PART)
6	539A7-22061		BRACKET,HEATER-SW.	ブラケット	1	[HR]
7	256J6-42291		RUBBER,SEAL	ラバー	1	A:10214- B [HR](NEW PART)
8	514T7-22061		WIRE,LEAD	ワイヤ	1	[HR]
9	514A1-42041		WIRE,LEAD	ワイヤ	1	[HR]
10	534A7-22101		CONNECTOR,MALE	コネクタ	1	[HR]
11	27042-43501	+	TERMINAL	ターミナル	2	[HR]

FIG.33 HEATER VALVE & ELBOW (G-TYPE):[HR]

(F50124H0) ﾋｰﾀﾊﾞﾙﾌﾞ&ｴﾙﾎﾞ

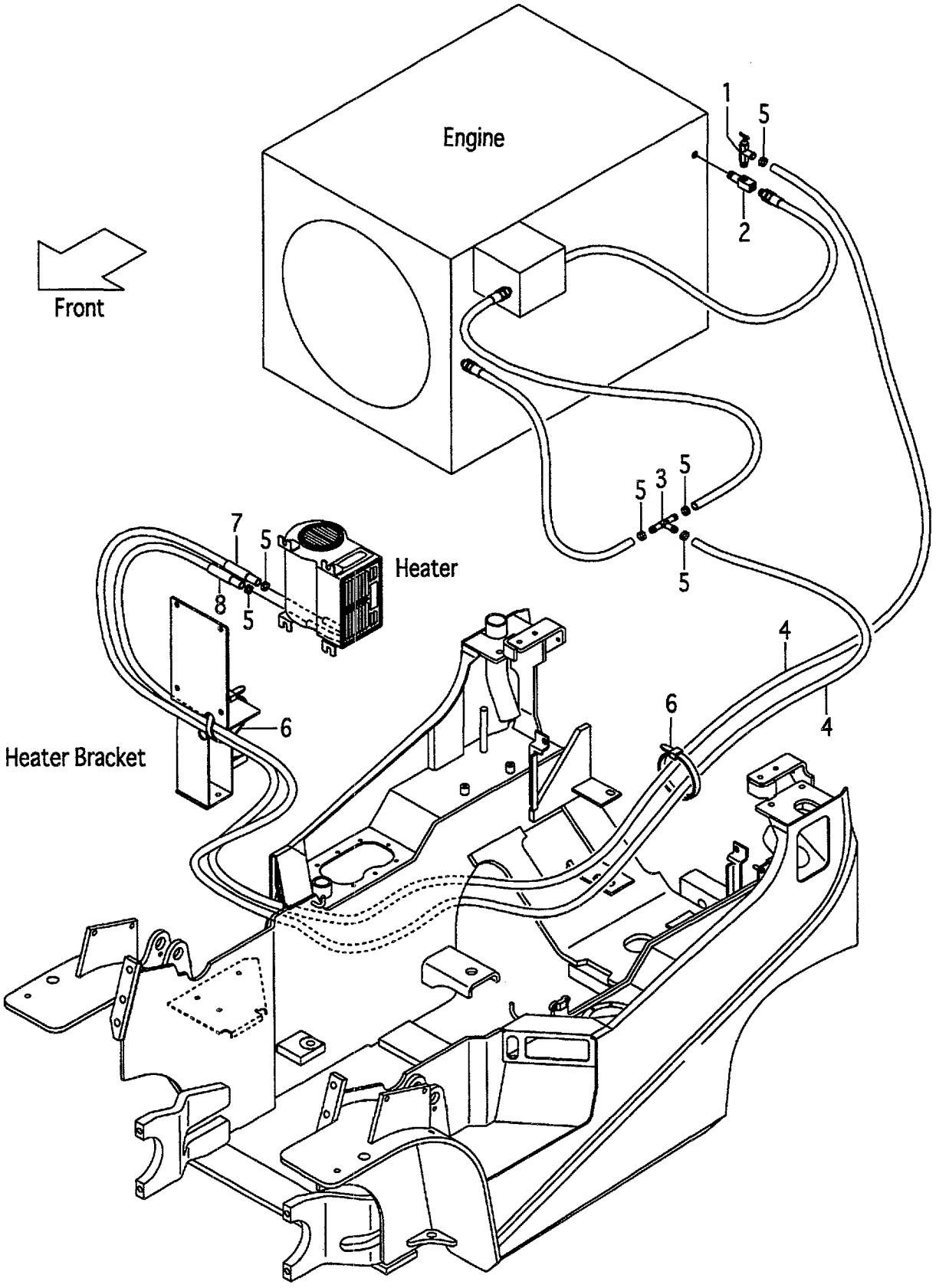

A:FG10C19 FG10T19 FG15C19 FG15T19 FG18C19 FG18T19

Item No	Part No.	Mark	Description		Req'd	Remarks : Serial No.
1	56110-63521		VALVE,WATER	ﾊﾞﾙﾌﾞ	1	[HR]
2	55597-22111		ELBOW	ｴﾙﾎﾞ	1	[HR]
3	23679-45051		THREE-WAY	ｽﾘｰｳｴｲ	1	[HR]
-	516G7-22001		THREE-WAY	ｽﾘｰｳｴｲ	1	[HR/LPO]
4	522A7-22011		HOSE,WATER	ﾎｰｽ	2	[HR]
5	04911-00022		CLIP	ｸﾘｯﾌﾟ	6	[HR]
6	04913-11200		BAND	ﾊﾞﾝﾄﾞ	10	[HR]
7	534A7-22201		PROTECTOR,TUBE	ﾌﾟﾛﾃｸﾀ	1	1-10213 [HR]
8	534A7-22211		PROTECTOR,TUBE	ﾌﾟﾛﾃｸﾀ	1	1-10213 [HR]

FIG.34 HEATER VALVE & ELBOW (D-TYPE):[HR]

(F50124J0) ﾋｰﾀﾊﾞﾙﾌﾞ&ｴﾙﾎﾞ

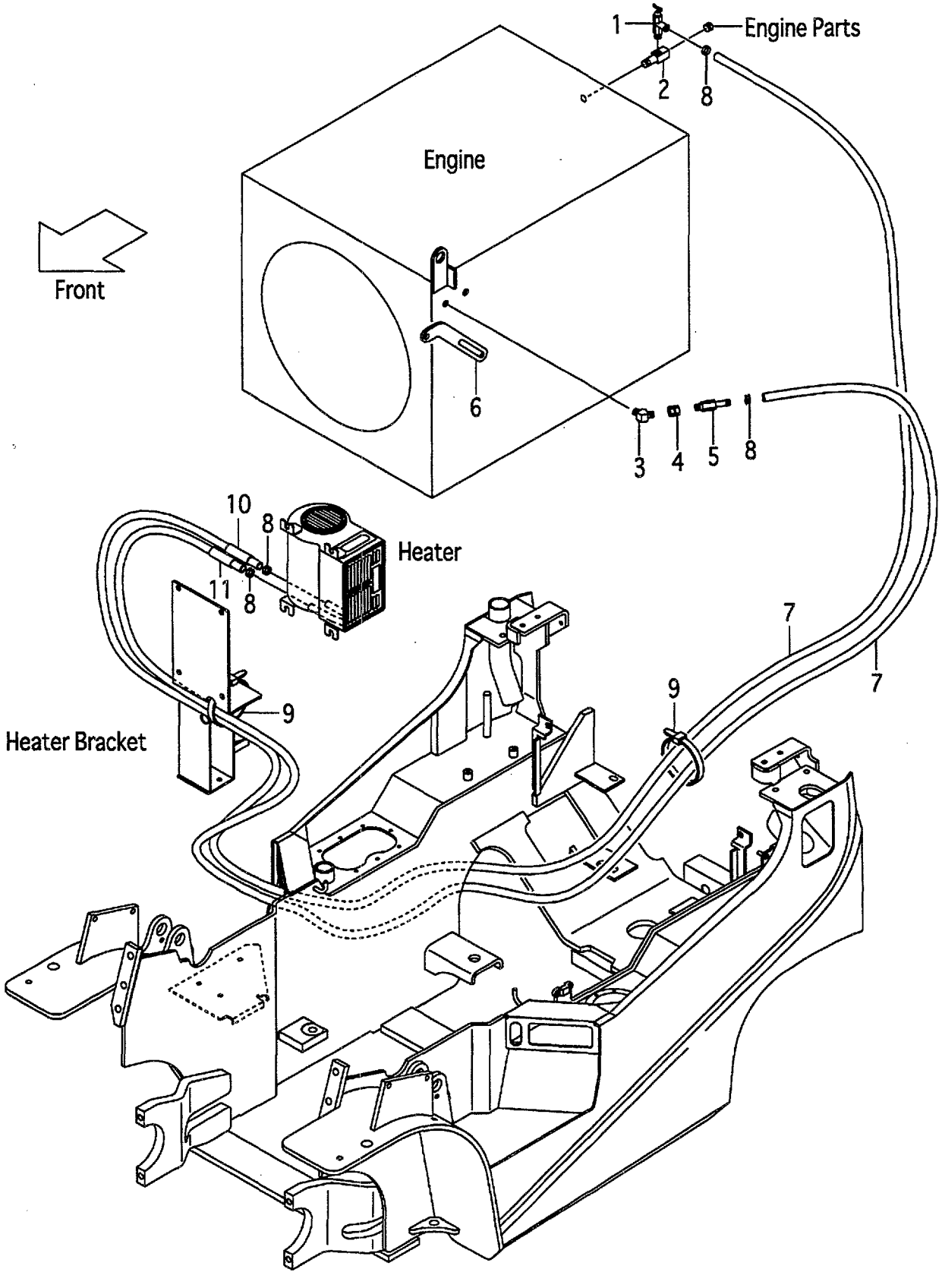

FIG.34
(F50124J0)

A:FD10C19 FD10T19 FD15C19 FD15T19 FD18C19 FD18T19

Item No	Part No.	Mark	Description		Req'd	Remarks : Serial No.
1	56110-63521		VALVE,WATER	ﾊﾞﾙﾌﾞ	1	[HR]
2	55597-22111		ELBOW	ｴﾙﾎﾞ	1	[HR]
3	53130-12091		ELBOW	ｴﾙﾎﾞ	1	[HR]
4	04138-00303		UNION	ﾕﾆｵﾝ	1	[HR]
5	529F7-22001		NIPPLE	ﾆｯﾌﾟﾙ	1	[HR]
6	520F7-22001		PLATE,ADJUST	ﾌﾟﾚｰﾄ	1	[HR]
7	522A7-22011		HOSE,WATER	ﾎｰｽ	2	[HR]
8	04911-00022		CLIP	ｸﾘｯﾌﾟ	4	[HR]
9	04913-11200		BAND	ﾊﾞﾝﾄﾞ	10	[HR]
10	534A7-22201		PROTECTOR,TUBE	ﾌﾟﾛﾃｸﾀ	1	[HR](OLD PART)
11	534A7-22211		PROTECTOR,TUBE	ﾌﾟﾛﾃｸﾀ	1	[HR](OLD PART)

FIG.35 SPOT LIGHT [SPL]

(F50124K0) スポットライト

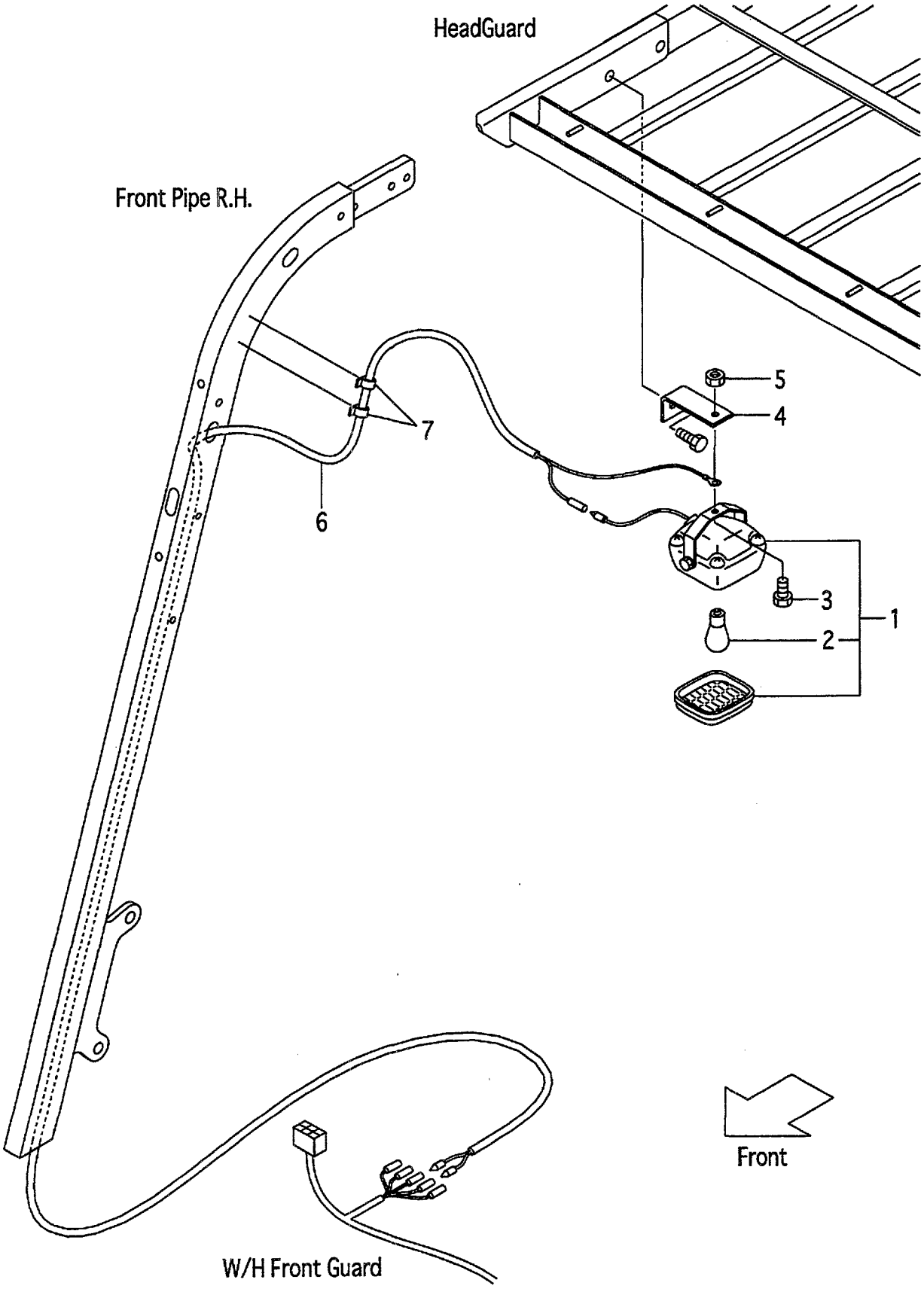

A:FG10C19 FG10T19 FG15C19 FG15T19 FG18C19 FG18T19
B:FD10C19 FD10T19 FD15C19 FD15T19 FD18C19 FD18T19

Item No	Part No.	Mark	Description		Req'd	Remarks : Serial No.
1	516G9-10101		LAMP-ASSY	ﾗﾝﾌﾟｱｯｾﾝ	1	[SPL] INC.2
2	516G9-12011		BULB,12V/18.2W	ﾊﾞﾙﾌﾞ	1	[SPL]
3	01185-08016		BOLT	ﾎﾞﾙﾄ	1	[SPL]
4	539A9-02001		BRACKET,SPOT-LAMP	ﾌﾞﾗｹｯﾄ	1	[SPL]
5	01400-00008		NUT	ﾅｯﾄ	1	[SPL]
6	539A9-02011		WIRE-HARNESS,SPOT-L.	ﾜｲﾔﾊｰﾈｽ	1	[SPL]
7	27732-42311		CLAMP,HARNESS	ｸﾗﾝﾌﾟ	2	[SPL]

FIG.36 FAN [FAN]

(F50124L0) ファン

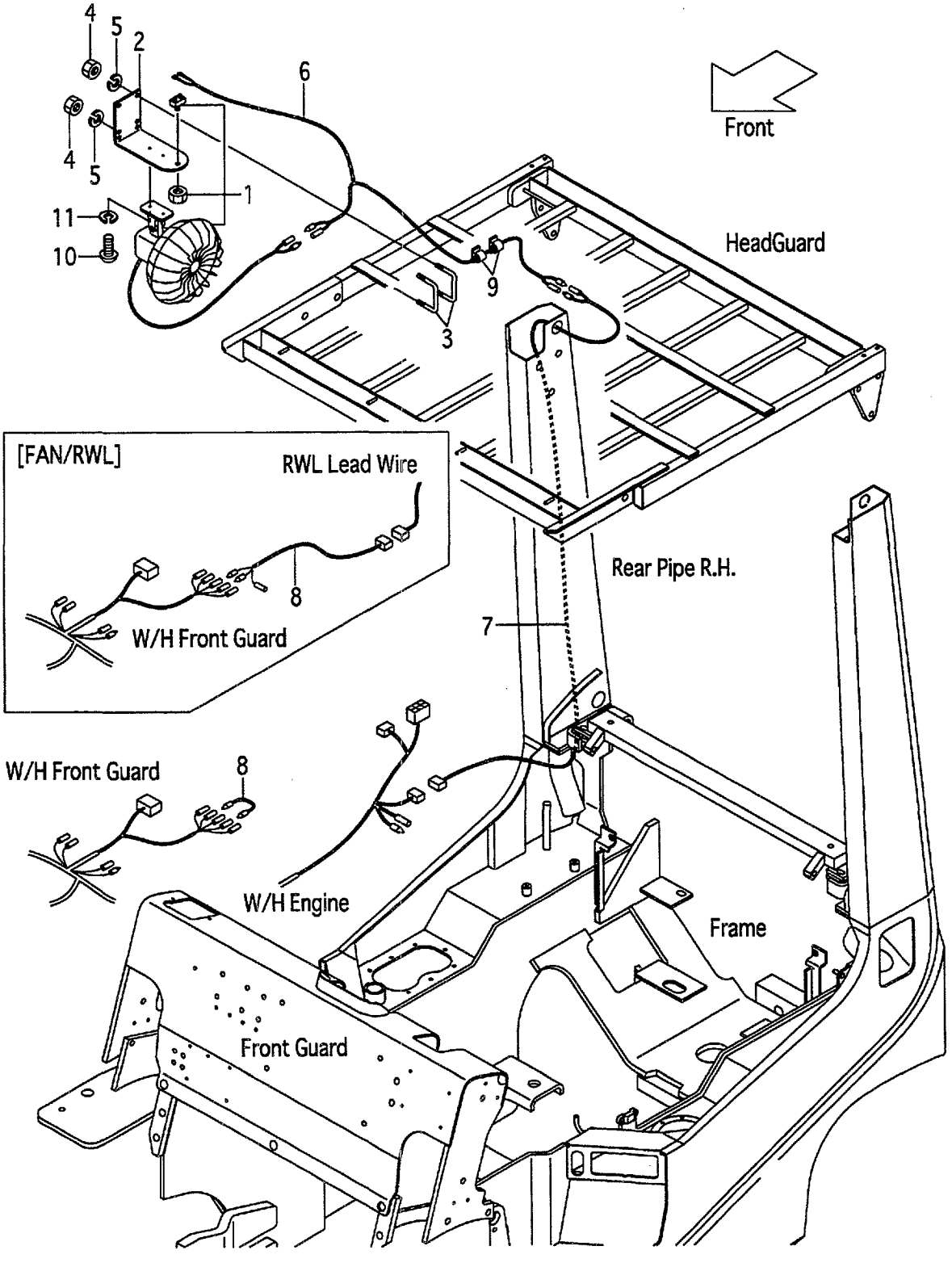

A:FG10C19 FG10T19 FG15C19 FG15T19 FG18C19 FG18T19
B:FD10C19 FD10T19 FD15C19 FD15T19 FD18C19 FD18T19

Item No	Part No.	Mark	Description		Req'd	Remarks : Serial No.
1	514A5-32341		FAN,CAR	ﾌｧﾝ	1	[FAN]
2	539A8-22101		BRACKET,FAN	ﾌﾞﾗｹｯﾄ	1	[FAN]
3	55812-42011		U-BOLT	Uﾎﾞﾙﾄ	2	[FAN]
4	01400-00008		NUT	ﾅｯﾄ	4	[FAN]
5	02010-00008		WASHER	ﾜｯｼｬ	4	[FAN]
6	539A8-22151		WIRE-HARNESS,FAN	ﾜｲﾔﾊｰﾈｽ	1	[FAN]
7	516G1-42101		WIRE,LEAD	ﾜｲﾔ	1	[FAN]
8	516G1-42211		WIRE,LEAD	ﾜｲﾔ	1	[FAN]
-	514A1-42041		WIRE,LEAD	ﾜｲﾔ	1	[FAN/RWL]
9	27732-42311		CLAMP,HARNESS	ｸﾗﾝﾌﾟ	4	[FAN]
10	01030-04014		SCREW	ｽｸﾘｭ	2	[FAN]
11	02010-00004		WASHER	ﾜｯｼｬ	2	[FAN]

FIG.37 AMMETER [AM]

(F50124M0) アンメータ

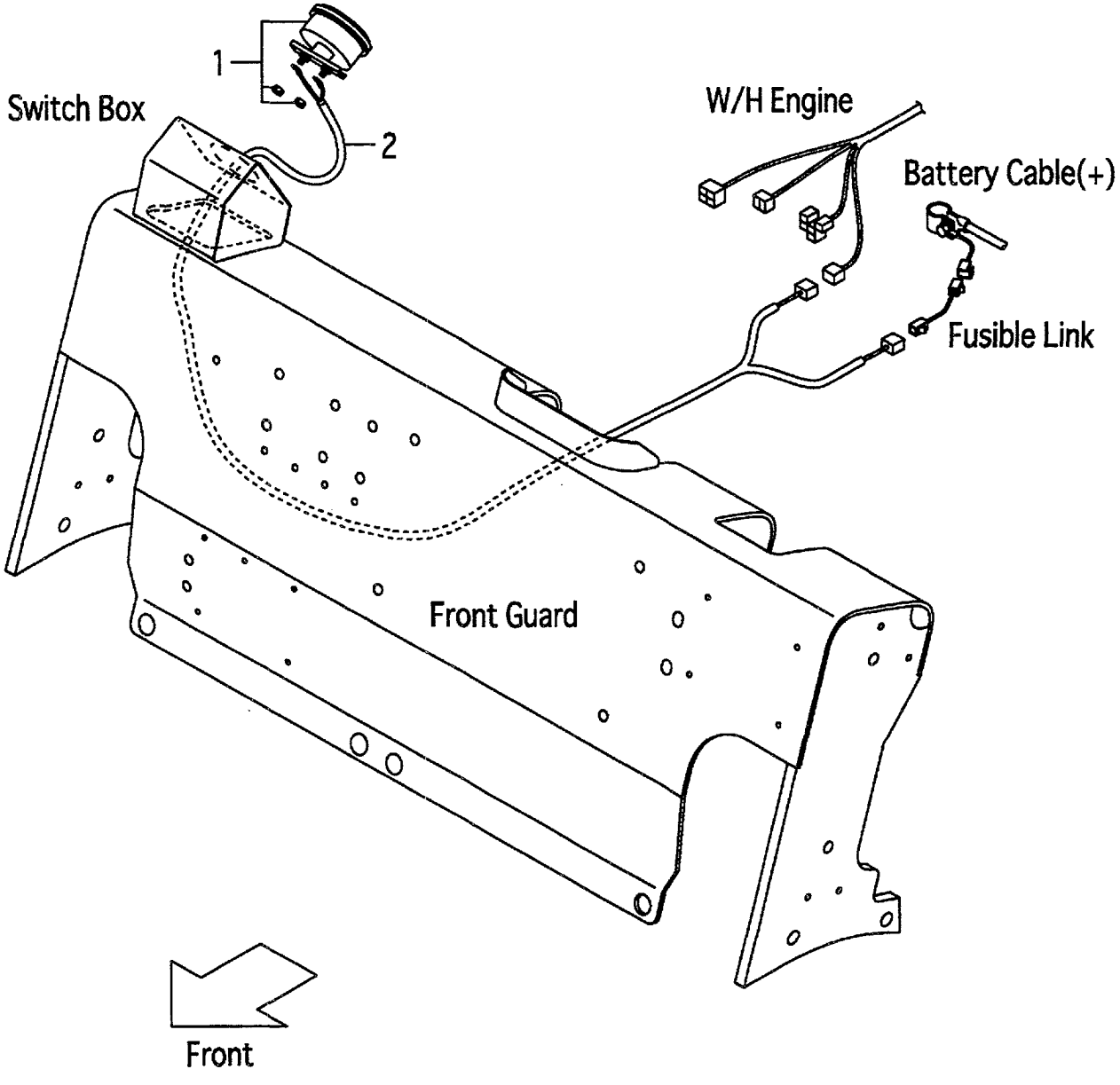

FIG.37
(F50124M0)

A:FG10C19 FG10T19 FG15C19 FG15T19 FG18C19 FG18T19
B:FD10C19 FD10T19 FD15C19 FD15T19 FD18C19 FD18T19

Item No	Part No.	Mark	Description	Req'd	Remarks : Serial No.
1	3956323		AMMETER,50A アンメータ	1	[AM]
2	516G6-12051		WIRE,LEAD,AMMETER ワイヤ	1	[AM]

FIG.38 SPEED METER [SM]

(F50124N0) ｽﾋﾟｰﾄﾞﾒｰﾀ

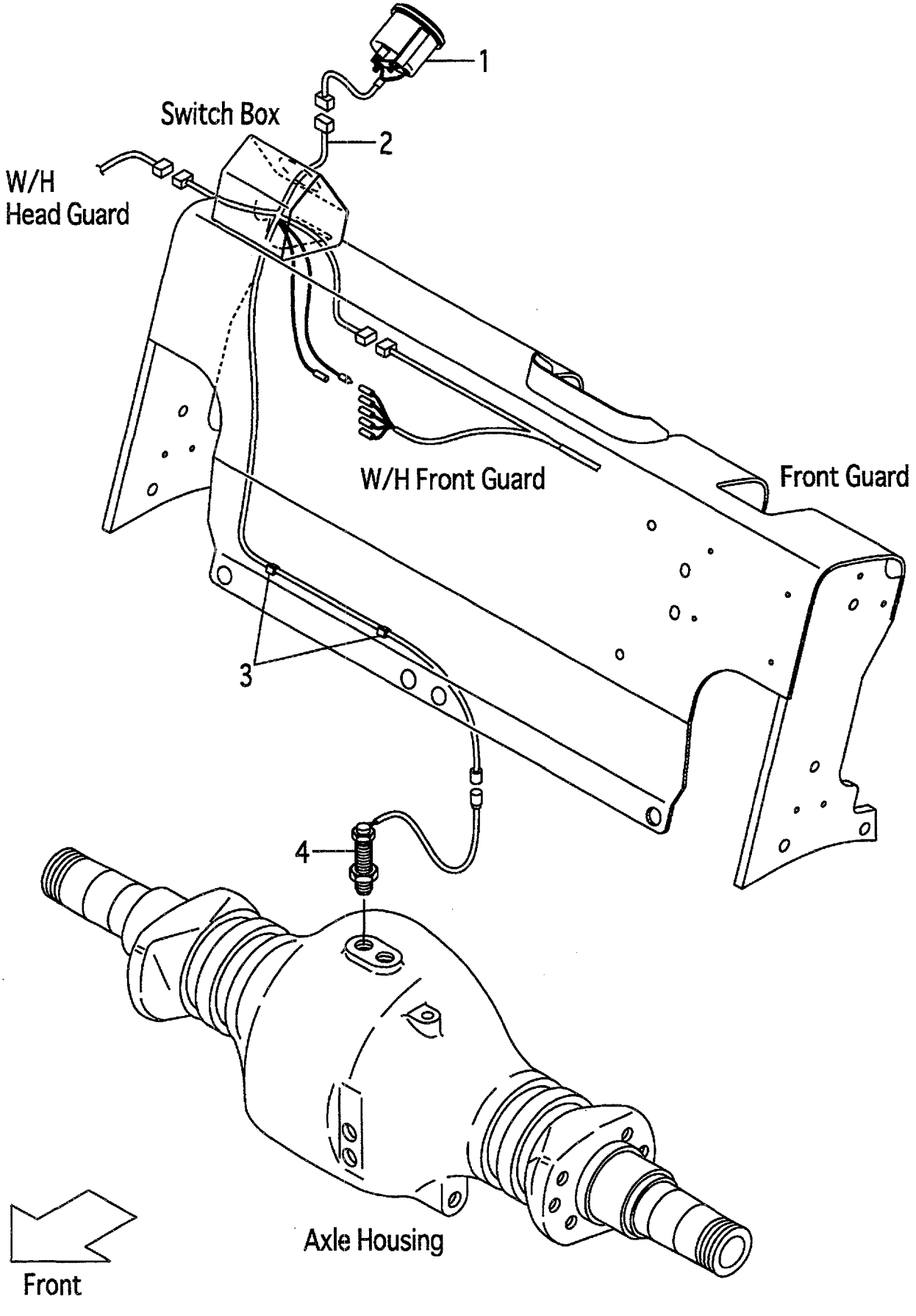

FIG.38
(F50124N0)

A:FG10C19 FG10T19 FG15C19 FG15T19 FG18C19 FG18T19
B:FD10C19 FD10T19 FD15C19 FD15T19 FD18C19 FD18T19

Item No	Part No.	Mark	Description		Req'd	Remarks : Serial No.
1	516G7-50101		METER,SPEED	ﾒｰﾀ	1	[SM]
2	516G7-50301		WIRE-HARNESS,SM	ﾜｲﾔﾊｰﾈｽ	1	[SM]
3	27732-42311		CLAMP,HARNESS	ｸﾗﾝﾌﾟ	2	[SM]
4	16402-54331		SENSOR	ｾﾝｻ	1	[SM]

FIG.39 TORQUE CONVERTER THERMOMETER [TTM]

(F50124P0) トルクコンバータサーモメータ

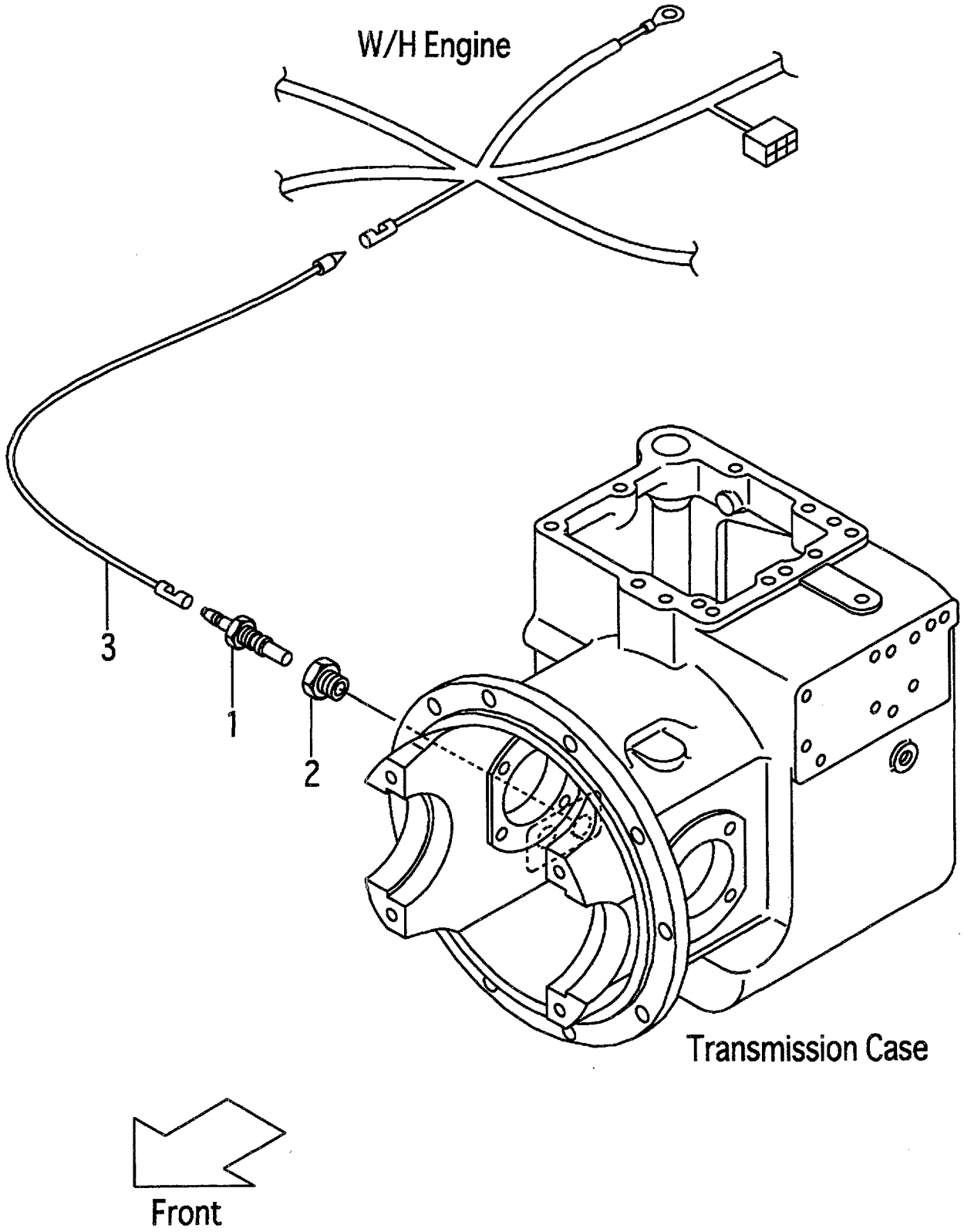

A:FG10T19 FG15T19 FG18T19
B:FD10T19 FD15T19 FD18T19

FIG.39
(F50124P0)

Item No	Part No.	Mark	Description		Req'd	Remarks : Serial No.
1	23652-44001		UNIT,SENDING	ｾﾝﾃﾞｨﾝｸﾞﾕﾆｯﾄ	1	[TTM]
2	521A2-42061		ADAPTER,THERMO-SW.	ｱﾀﾞﾌﾟﾀ	1	[TTM]
3	214A2-42371		WIRE,LEAD	ﾜｲﾔ	1	[TTM]

FIG.40 TORQUE CONVERTER PRESSURE METER [TPM]

(F50124Q0) トルクコンバータプレッシャメータ

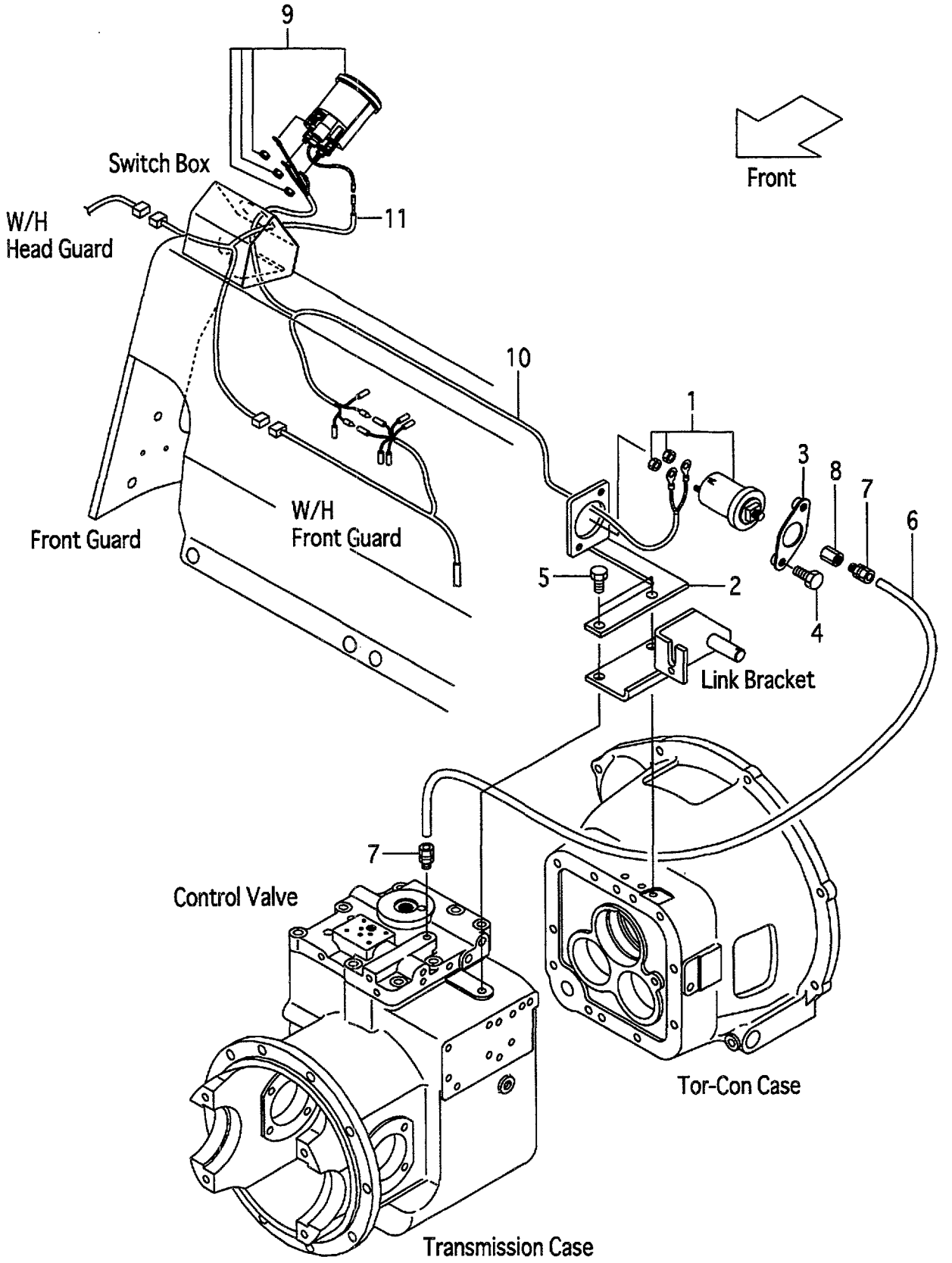

A:FG10T19 FG15T19 FG18T19
B:FD10T19 FD15T19 FD18T19

Item No	Part No.	Mark	Description	Req'd	Remarks : Serial No.
1	516G6-92001		SENSOR,PRESS.GAUGE センサ	1	[TPM]
2	516G6-92121		BRACKET,SENSOR ﾌﾞﾗｹｯﾄ	1	[TPM]
3	516G6-92151		COVER,SENSOR ｶﾊﾞｰ	1	[TPM]
4	01186-08025		BOLT ﾎﾞﾙﾄ	2	[TPM]
5	01184-10025		BOLT ﾎﾞﾙﾄ	2	[TPM]
6	539B6-92211		PIPE,CAPPER ﾊﾟｲﾌﾟ	1	[TPM]
7	516G6-92011		JOINT ｼﾞｮｲﾝﾄ	2	[TPM]
8	516G6-92031		ADAPTER ｱﾀﾞﾌﾟﾀ	1	[TPM]
9	516G6-92022		GAUGE,PRESSURE ｹﾞｰｼﾞ	1	[TPM]
10	516G6-92201		WIRE-HARNESS,TPM ﾜｲﾔﾊｰﾈｽ	1	[TPM]
11	516G6-92211		WIRE-HARNESS,TPM ﾜｲﾔﾊｰﾈｽ	1	[TPM]

FIG.41 SPEED DETECTOR UNIT [SAS]

(F50124R0) ｽﾋﾟｰﾄﾞﾃﾞｨﾃｸﾀﾕﾆｯﾄ

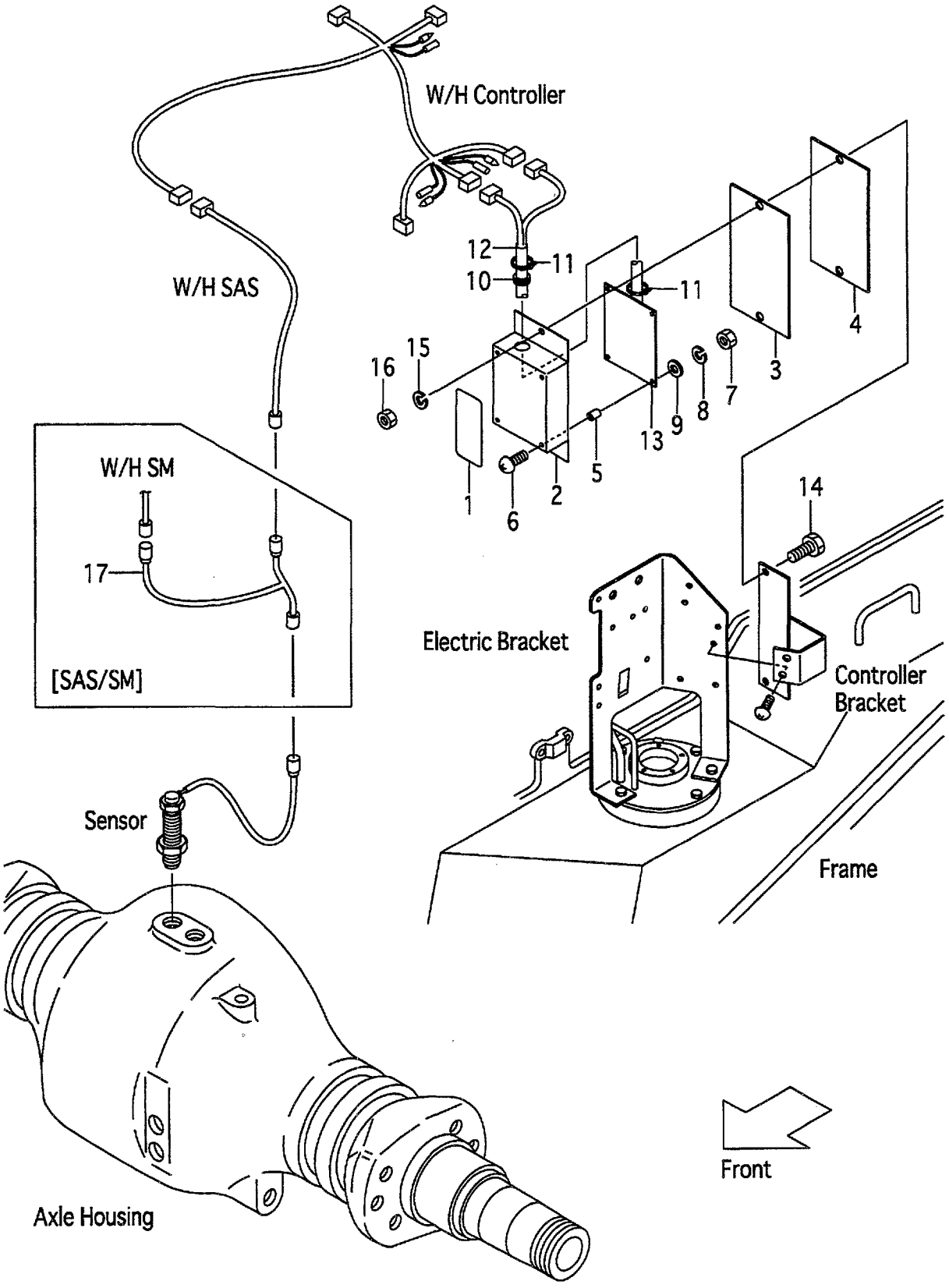

A:FG10C19 FG10T19 FG15C19 FG15T19 FG18C19 FG18T19
B:FD10C19 FD10T19 FD15C19 FD15T19 FD18C19 FD18T19

Item No	Part No.	Mark	Description		Req'd	Remarks : Serial No.
A1	534A7-50301		UNIT,SPEED-DETECTOR	ｽﾋﾟｰﾄﾞﾃﾞｨﾃｸﾀﾕﾆｯﾄ	1	[SASB05][SASR05][SASC05] INC.1-16
-	534A7-50401		UNIT,SPEED-DETECTOR	ｽﾋﾟｰﾄﾞﾃﾞｨﾃｸﾀﾕﾆｯﾄ	1	[SASB10][SASR10][SASC10] INC.1-16
-	534A7-50501		UNIT,SPEED-DETECTOR	ｽﾋﾟｰﾄﾞﾃﾞｨﾃｸﾀﾕﾆｯﾄ	1	[SASB15][SASR15][SASC15] INC.1-16
1	539A7-52311		PLATE,NAME	ﾌﾟﾚｰﾄ	1	[SASB05][SASR05][SASC05]
-	539A7-52411		PLATE,NAME	ﾌﾟﾚｰﾄ	1	[SASB10][SASR10][SASC10]
-	539A7-52511		PLATE,NAME	ﾌﾟﾚｰﾄ	1	[SASB15][SASR15][SASC15]
2	55792-52601		CASE	ｹｰｽ	1	[SASB05&10&15][SASR05&10&15] [SASC05&10&15]
3	55792-52611		SEAT,SPONG	ｼｰﾄ	1	[SASB05&10&15][SASR05&10&15] [SASC05&10&15]
4	55792-52621		PLATE	ﾌﾟﾚｰﾄ	1	[SASB05&10&15][SASR05&10&15] [SASC05&10&15]
5	27042-64311		SPACER	ｽﾍﾟｰｻ	4	[SASB05&10&15][SASR05&10&15] [SASC05&10&15]
6	01030-04020		SCREW	ｽｸﾘｭ	4	[SASB05&10&15][SASR05&10&15] [SASC05&10&15]
7	01400-00004		NUT	ﾅｯﾄ	4	[SASB05&10&15][SASR05&10&15] [SASC05&10&15]
8	02010-00004		WASHER	ﾜｯｼｬ	4	[SASB05&10&15][SASR05&10&15] [SASC05&10&15]
9	02000-00004		WASHER	ﾜｯｼｬ	4	[SASB05&10&15][SASR05&10&15] [SASC05&10&15]
10	205A2-63311		GROMMET	ｸﾞﾛﾒｯﾄ	1	[SASB05&10&15][SASR05&10&15] [SASC05&10&15]
11	04913-10200		BAND	ﾊﾞﾝﾄﾞ	2	[SASB05&10&15][SASR05&10&15] [SASC05&10&15]
12	55792-52641		WIRE-HARNESS,ATC	ﾜｲﾔﾊｰﾈｽ	1	[SASB05&10&15][SASR05&10&15] [SASC05&10&15]
13	534A7-52301		BOARD,PRINTED	ﾎﾞｰﾄﾞ	1	[SASB05][SASR05][SASC05]
-	534A7-52401		BOARD,PRINTED	ﾎﾞｰﾄﾞ	1	[SASB10][SASR10][SASC10]
-	534A7-52501		BOARD,PRINTED	ﾎﾞｰﾄﾞ	1	[SASB15][SASR15][SASC15]
14	01100-06020		BOLT	ﾎﾞﾙﾄ	2	[SASB05&10&15][SASR05&10&15] [SASC05&10&15]
15	02010-00006		WASHER	ﾜｯｼｬ	2	[SASB05&10&15][SASR05&10&15] [SASC05&10&15]
16	01400-00006		NUT	ﾅｯﾄ	2	[SASB05&10&15][SASR05&10&15] [SASC05&10&15]
17	539A7-52041		WIRE-HARNESS,SAS/SM	ﾜｲﾔﾊｰﾈｽ	1	[SAS/SM]

FIG.42 SPEED ALARM SYSTEM [SASB]

(F50124S0) ｽﾋﾟｰﾄﾞｱﾗｰﾑｼｽﾃﾑ

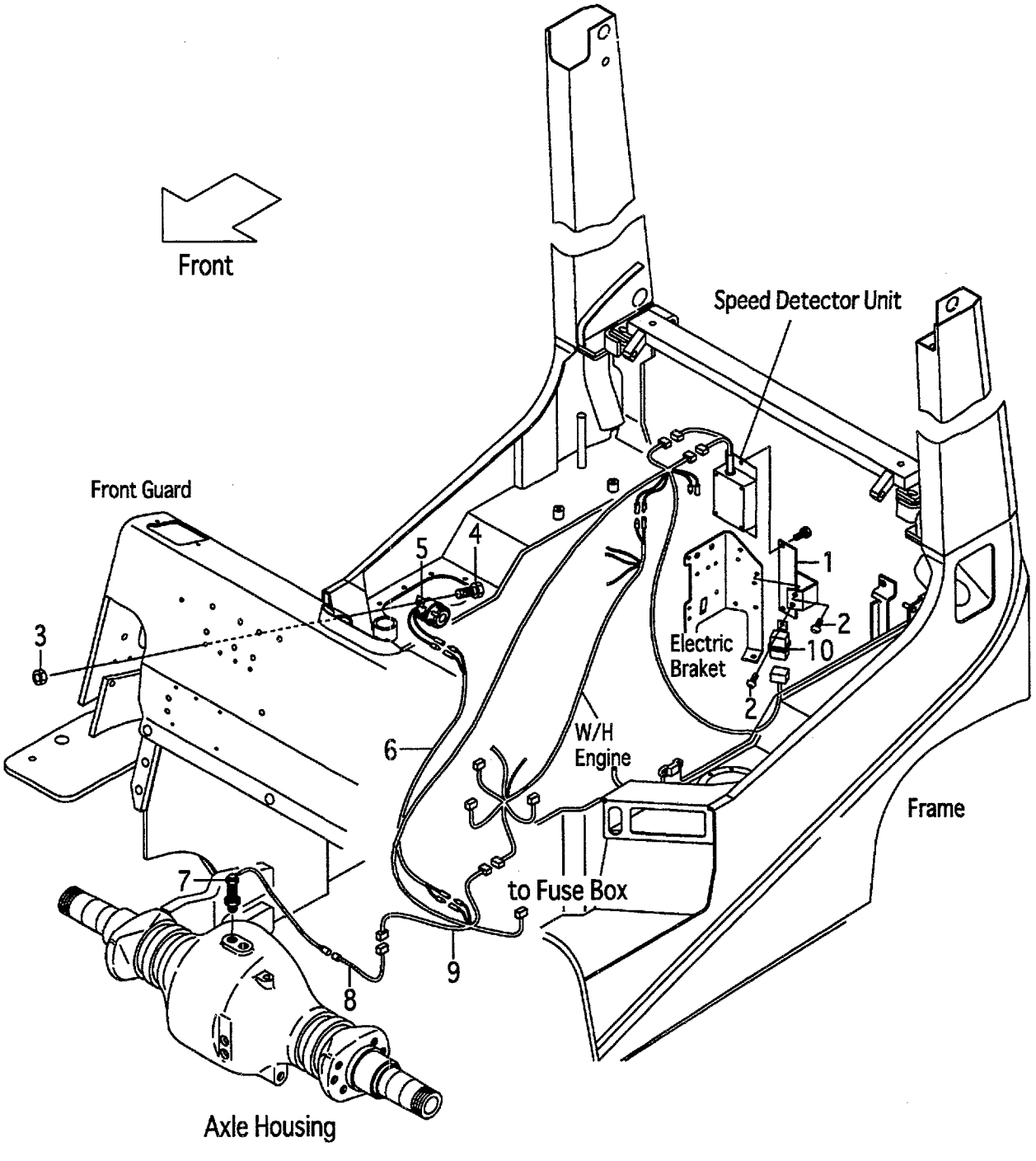

FIG.42
(F50124S0)

A:FG10C19 FG10T19 FG15C19 FG15T19 FG18C19 FG18T19
B:FD10C19 FD10T19 FD15C19 FD15T19 FD18C19 FD18T19

Item No	Part No.	Mark	Description	Req'd	Remarks : Serial No.
1	539A7-52001		BRACKET,CONTROLLER ﾌﾞﾗｹｯﾄ	1	[SASB05][SASB10][SASB15]
2	214A2-42611		SCREW ｽｸﾘｭ	2	[SASB05][SASB10][SASB15]
3	01400-00006		NUT ﾅｯﾄ	1	[SASB05][SASB10][SASB15]
4	239A5-42381		BOLT ﾎﾞﾙﾄ	1	[SASB05][SASB10][SASB15]
5	529F7-52241		ALARM,BUZZER ｱﾗｰﾑ	1	[SASB05][SASB10][SASB15]
6	558A9-92001		WIRE-HARNESS,LICENCE ﾜｲﾔﾊｰﾈｽ	1	[SASB05][SASB10][SASB15]
7	16402-54331		SENSOR ｾﾝｻ	1	[SASB05][SASB10][SASB15]
8	534A7-50601		WIRE-HARNESS,SAS ﾜｲﾔﾊｰﾈｽ	1	[SASB05][SASB10][SASB15]
9	539A7-52031		WIRE-HARNESS,CONTROL ﾜｲﾔﾊｰﾈｽ	1	[SASB05][SASB10][SASB15]
10	26062-42881		RELAY,12V ﾘﾚｰ	1	[SASB05][SASB10][SASB15]

FIG.43 SPEED ALARM SYSTEM [SASR]

(F50124T0) スピードアラームシステム

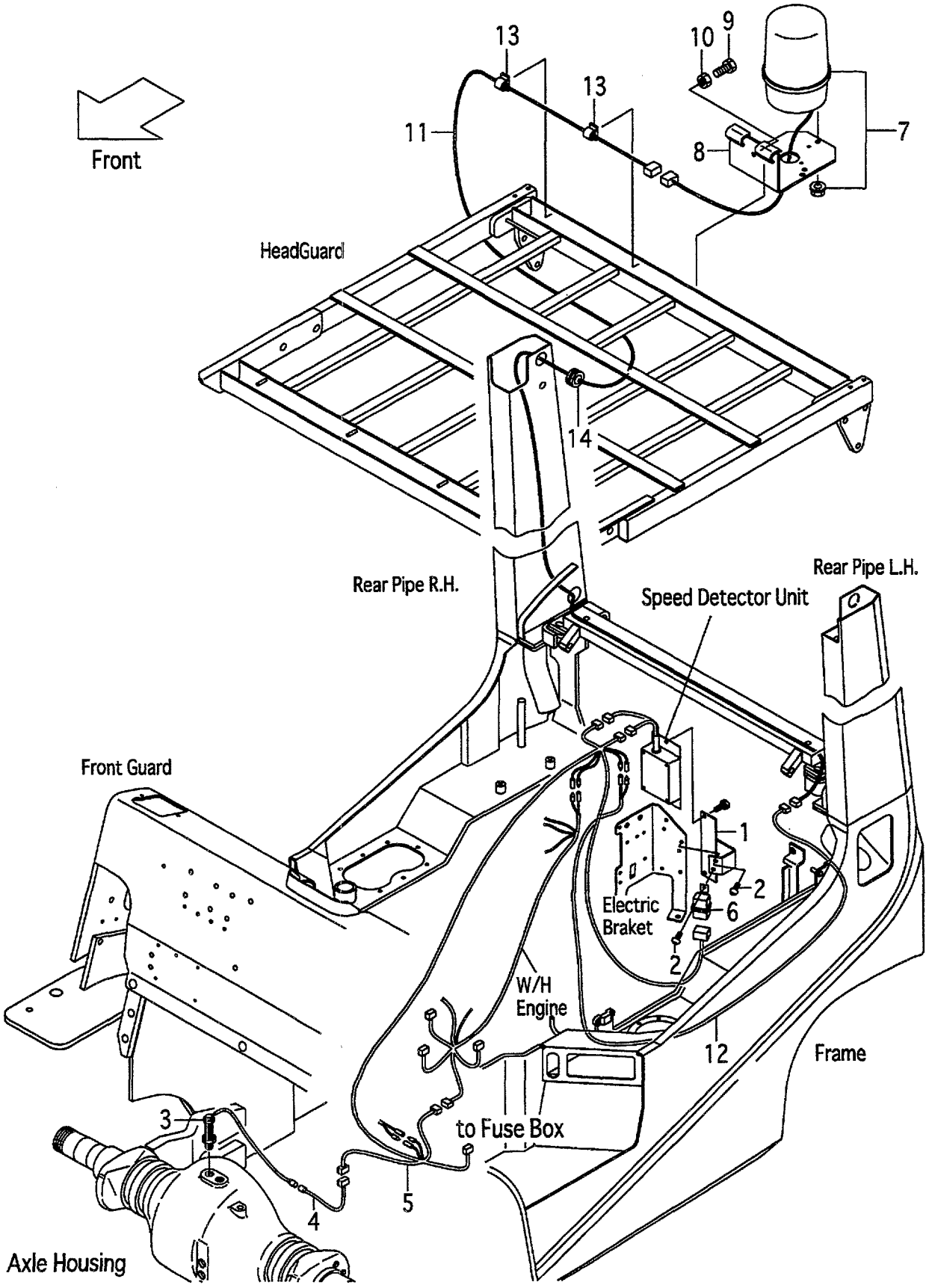

FIG.43
(F50124T0)

A:FG10C19 FG10T19 FG15C19 FG15T19 FG18C19 FG18T19
B:FD10C19 FD10T19 FD15C19 FD15T19 FD18C19 FD18T19

Item No	Part No.	Mark	Description	Req'd	Remarks : Serial No.
1	539A7-52001		BRACKET,CONTROLLER ﾌﾞﾗｹｯﾄ	1	[SASR05][SASR10][SASR15]
2	214A2-42611		SCREW ｽｸﾘｭ	2	[SASR05][SASR10][SASR15]
3	16402-54331		SENSOR ｾﾝｻ	1	[SASR05][SASR10][SASR15]
4	534A7-50601		WIRE-HARNESS,SAS ﾜｲﾔﾊｰﾈｽ	1	[SASR05][SASR10][SASR15]
5	539A7-52031		WIRE-HARNESS,CONTROL ﾜｲﾔﾊｰﾈｽ	1	[SASR05][SASR10][SASR15]
6	26062-42881		RELAY,12V ﾘﾚｰ	1	[SASR05][SASR10][SASR15]
7	514A1-41001		LIGHT,REVOLVING ﾗｲﾄ	1	[SASR05][SASR10][SASR15]
8	529F1-42251		BRACKET,REVOLVING ﾌﾞﾗｹｯﾄ	1	[SASR05][SASR10][SASR15]
9	01100-08020		BOLT ﾎﾞﾙﾄ	3	[SASR05][SASR10][SASR15]
10	01400-00008		NUT ﾅｯﾄ	3	[SASR05][SASR10][SASR15]
11	514A1-42191		WIRE,LEAD ﾜｲﾔ	1	[SASR05][SASR10][SASR15]
12	539A7-52101		WIRE,LEAD ﾜｲﾔ	1	[SASR05][SASR10][SASR15]
13	27732-42311		CLAMP,HARNESS ｸﾗﾝﾌﾟ	2	[SASR05][SASR10][SASR15]
14	22679-47301		GROMMET ｸﾞﾛﾒｯﾄ	1	[SASR05][SASR10][SASR15]

FIG.44 SPEED ALARM SYSTEM [SASC]

(F50124U0) スピードアラームシステム

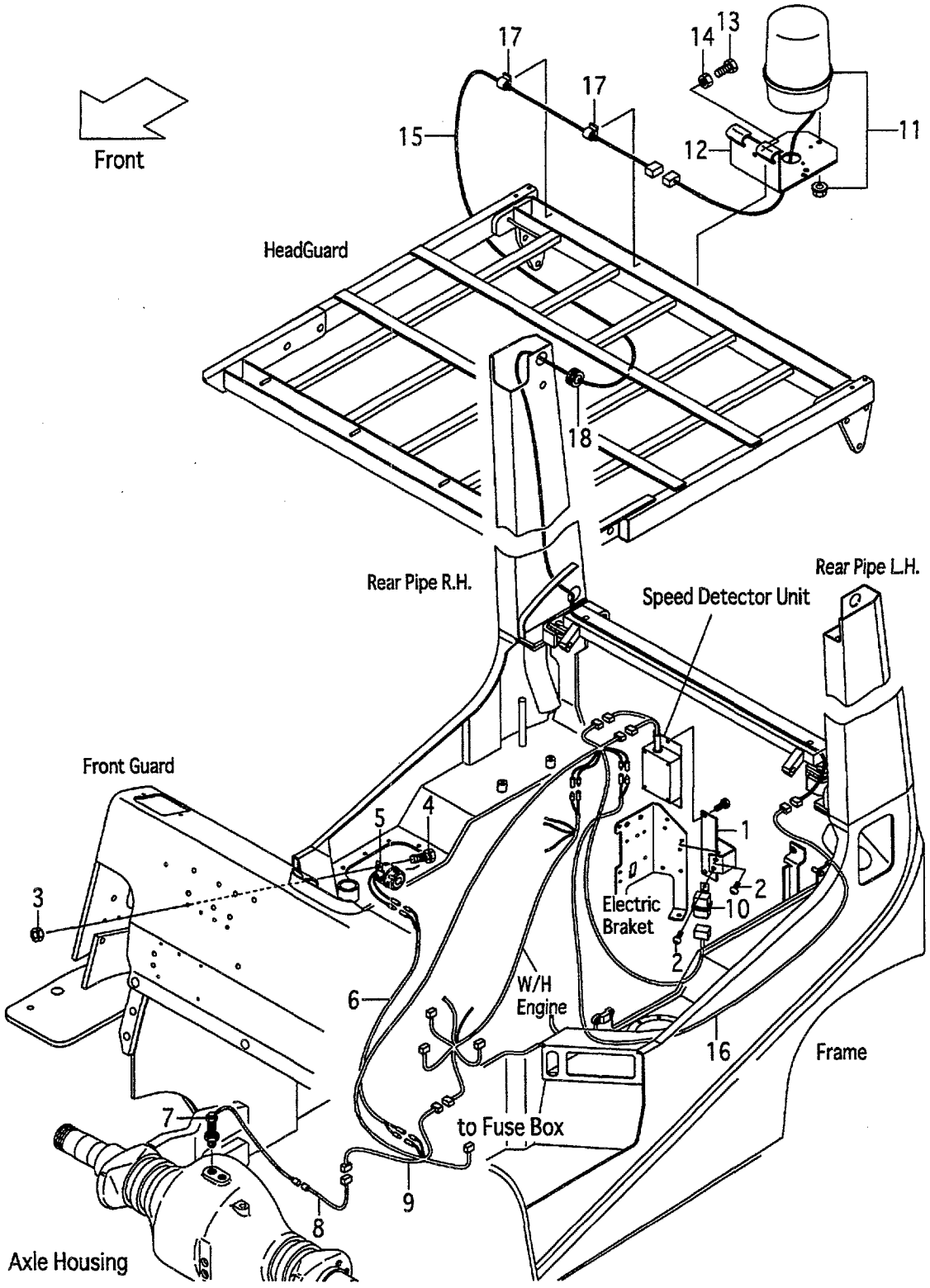

FIG.44
(F50124U0)

A:FG10C19 FG10T19 FG15C19 FG15T19 FG18C19 FG18T19
B:FD10C19 FD10T19 FD15C19 FD15T19 FD18C19 FD18T19

Item No	Part No.	Mark	Description	Req'd	Remarks : Serial No.
1	539A7-52001		BRACKET,CONTROLLER ﾌﾞﾗｹｯﾄ	1	[SASC05][SASC10][SASC15]
2	214A2-42611		SCREW ｽｸﾘｭ	2	[SASC05][SASC10][SASC15]
3	01400-00006		NUT ﾅｯﾄ	1	[SASC05][SASC10][SASC15]
4	239A5-42381		BOLT ﾎﾞﾙﾄ	1	[SASC05][SASC10][SASC15]
5	529F7-52241		ALARM,BUZZER ｱﾗｰﾑ	1	[SASC05][SASC10][SASC15]
6	558A9-92001		WIRE-HARNESS,LICENCE ﾜｲﾔﾊｰﾈｽ	1	[SASC05][SASC10][SASC15]
7	16402-54331		SENSOR ｾﾝｻ	1	[SASC05][SASC10][SASC15]
8	534A7-50601		WIRE-HARNESS,SAS ﾜｲﾔﾊｰﾈｽ	1	[SASC05][SASC10][SASC15]
9	539A7-52031		WIRE-HARNESS,CONTROL ﾜｲﾔﾊｰﾈｽ	1	[SASC05][SASC10][SASC15]
10	26062-42881		RELAY,12V ﾘﾚｰ	1	[SASC05][SASC10][SASC15]
11	514A1-41001		LIGHT,REVOLVING ﾗｲﾄ	1	[SASC05][SASC10][SASC15]
12	529F1-42251		BRACKET,REVOLVING ﾌﾞﾗｹｯﾄ	1	[SASC05][SASC10][SASC15]
13	01100-08020		BOLT ﾎﾞﾙﾄ	3	[SASC05][SASC10][SASC15]
14	01400-00008		NUT ﾅｯﾄ	3	[SASC05][SASC10][SASC15]
15	514A1-42191		WIRE,LEAD ﾜｲﾔ	1	[SASC05][SASC10][SASC15]
16	539A7-52101		WIRE,LEAD ﾜｲﾔ	1	[SASC05][SASC10][SASC15]
17	27732-42311		CLAMP,HARNESS ｸﾗﾝﾌﾟ	2	[SASC05][SASC10][SASC15]
18	22679-47301		GROMMET ｸﾞﾛﾒｯﾄ	1	[SASC05][SASC10][SASC15]

FIG.45 OK MONITOR [OKM]

(F50124W0) OKモニタ

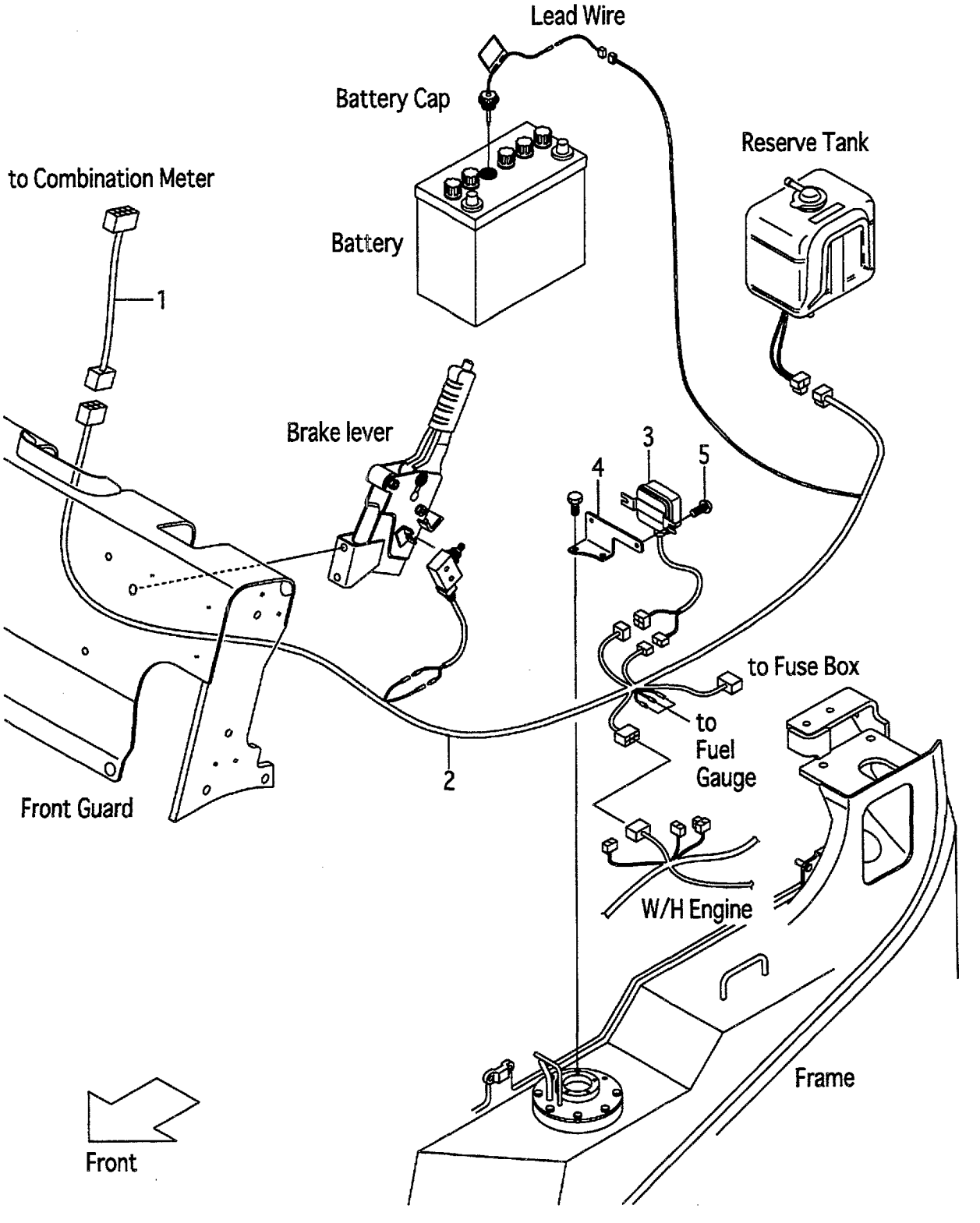

FIG.45
(F50124W0)

A:FG10C19 FG10T19 FG15C19 FG15T19 FG18C19 FG18T19
B:FD10C19 FD10T19 FD15C19 FD15T19 FD18C19 FD18T19

Item No	Part No.	Mark	Description		Req'd	Remarks : Serial No.
1	516G6-22011		WIRE,LEAD	ﾜｲﾔ	1	[OKM]
2	539A6-22011		WIRE-HARNESS,OKM	ﾜｲﾔﾊｰﾈｽ	1	[OKM]
3	229F2-42161		MODULE,WARNING	ﾓｼﾞｭｰﾙ	1	[OKM]
4	539A6-22001		BRACKET,WARN.MODULE	ﾌﾞﾗｹｯﾄ	1	[OKM]
5	214A2-42611		SCREW	ｽｸﾘｭ	2	[OKM]

FIG.46 DRIVE UNIT MOUNT (C-TYPE)

(F5012510) ﾄﾞﾗｲﾌﾞﾕﾆｯﾄﾏｳﾝﾄ

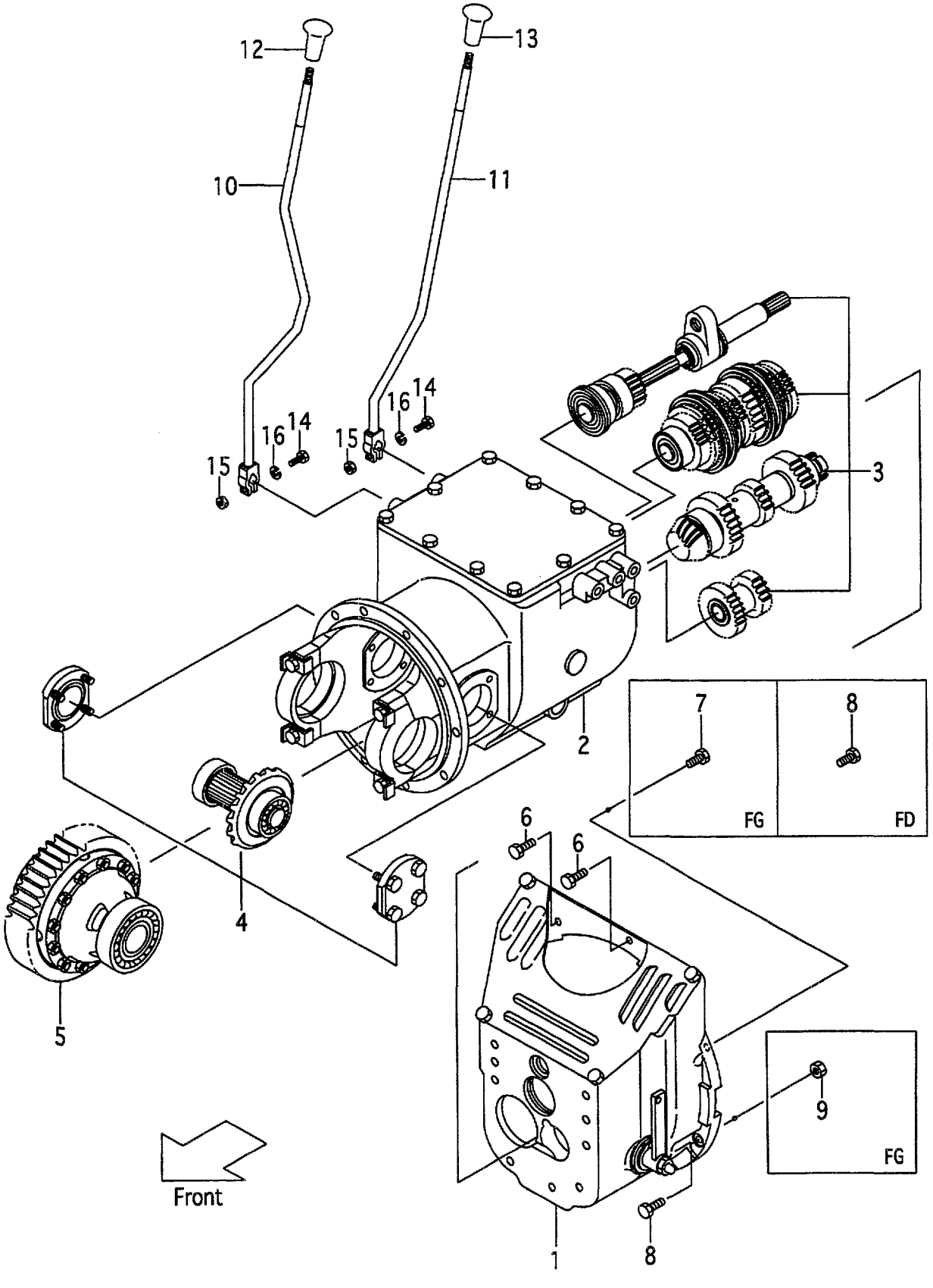

A:FG10C19 FG15C19 FG18C19
B:FD10C19 FD15C19 FD18C19

Item No	Part No.	Mark	Description		Req'd	Remarks : Serial No.
A1	116G2-50001		UNIT-ASSY,DRIVE	ﾄﾞﾗｲﾌﾞﾕﾆｯﾄｱｯｾﾝ	1	INC.1-5
-	116G2-50041		UNIT-ASSY,DRIVE	ﾄﾞﾗｲﾌﾞﾕﾆｯﾄｱｯｾﾝ	1	[PC] INC.1-5
1	NO PART NO.		CLUTCH	ｸﾗｯﾁ	1	SEE FIG.48
-	NO PART NO.		CLUTCH	ｸﾗｯﾁ	1	[PC]SEE FIG.48
A2	116G2-50201		SUB-ASSY,DRIVE-UNIT	ﾄﾞﾗｲﾌﾞﾕﾆｯﾄｻﾌﾞｱｯｾﾝ	1	INC.2-5
-	116G2-50401		SUB-ASSY,DRIVE-UNIT	ﾄﾞﾗｲﾌﾞﾕﾆｯﾄｻﾌﾞｱｯｾﾝ	1	[PC] INC.2-5
2	NO PART NO.		CASE,T/M	ｹｰｽ	1	SEE FIG.49
-	NO PART NO.		CASE,T/M	ｹｰｽ	1	[PC]SEE FIG.49
3	NO PART NO.		GEAR,T/M	ｷﾞﾔｰ	1	SEE FIG.50
4	NO PART NO.		REDUCTION	ﾘﾀﾞｸｼｮﾝ	1	SEE FIG.57
5	NO PART NO.		DIFFERENTIAL	ﾃﾞﾌｧﾚﾝｼｬﾙ	1	SEE FIG.58
6	01184-10035		BOLT	ﾎﾞﾙﾄ	2	A
-	01184-10030		BOLT	ﾎﾞﾙﾄ	2	B
7	01184-10040		BOLT	ﾎﾞﾙﾄ	1	A
8	01184-10050		BOLT	ﾎﾞﾙﾄ	5	A
-	01184-10035		BOLT	ﾎﾞﾙﾄ	6	B
9	01400-00010		NUT	ﾅｯﾄ	5	A
10	218G2-52001		LEVER,SPEED	ﾚﾊﾞｰ	1	
-	518G2-32001		LEVER,SPEED	ﾚﾊﾞｰ	1	[LCR]
11	218G2-52061		LEVER,DIRECTION	ﾚﾊﾞｰ	1	
-	518G2-32041		LEVER,DIRECTION	ﾚﾊﾞｰ	1	[LCR]
12	214A2-52002		KNOB,SPEED	ﾉﾌﾞ	1	
13	214A2-52012		KNOB,DIRECTION	ﾉﾌﾞ	1	
14	01183-08045		BOLT	ﾎﾞﾙﾄ	2	
15	01400-00008		NUT	ﾅｯﾄ	2	
16	02010-00008		WASHER	ﾜｯｼｬ	2	

FIG.47 DRIVE UNIT MOUNT (T-TYPE)

(F5012520) ﾄﾞﾗｲﾌﾞﾕﾆｯﾄﾏｳﾝﾄ

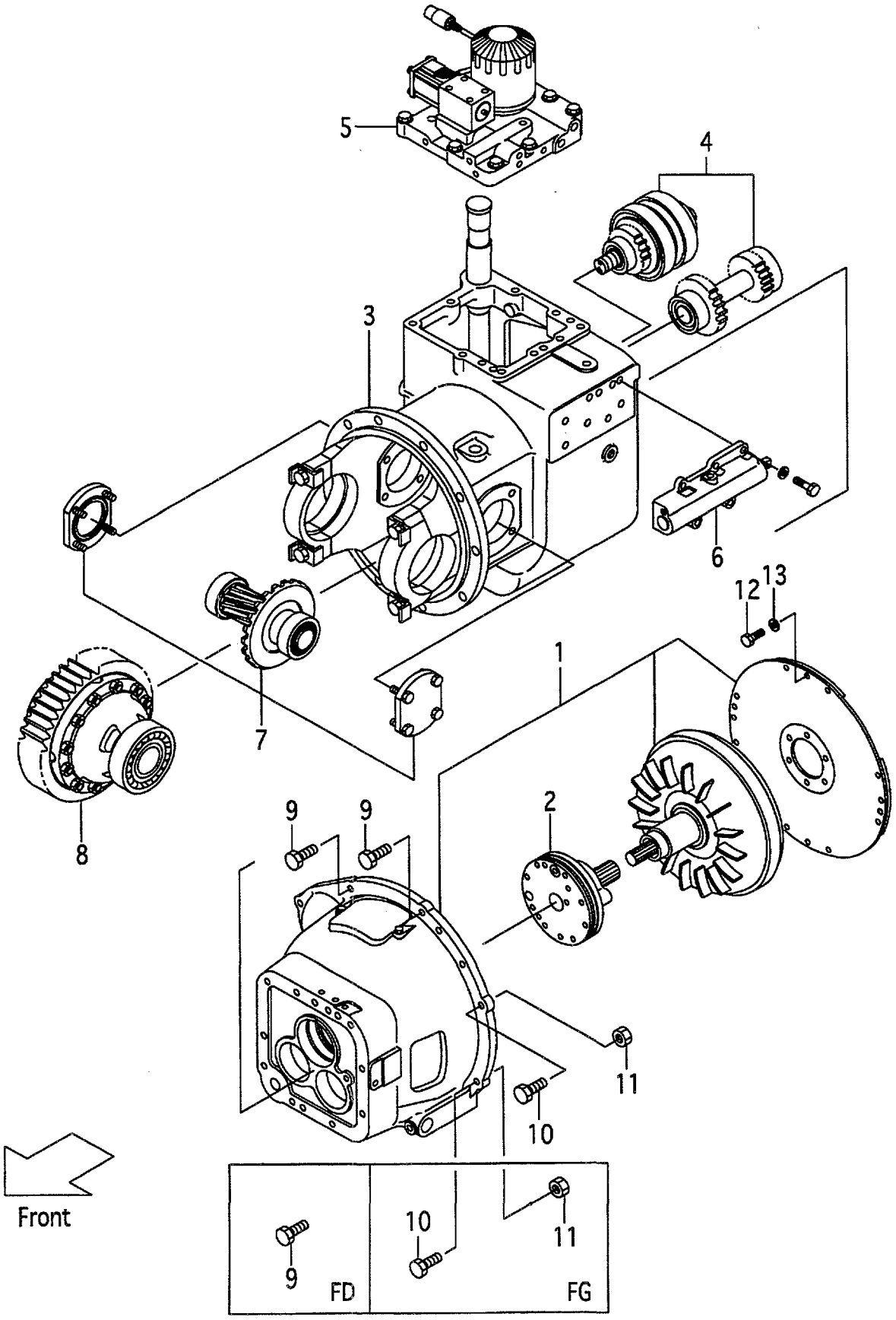

A:FG10T19 FG15T19 FG18T19
B:FD10T19 FD15T19 FD18T19

Item No	Part No.	Mark	Description		Req'd	Remarks : Serial No.
A1	118H2-50001		UNIT-ASSY,DRIVE	ﾄﾞﾗｲﾌﾞﾕﾆｯﾄｱｯｾﾝ	1	INC.1-8
-	518H3-80251		UNIT-ASSY,DRIVE	ﾄﾞﾗｲﾌﾞﾕﾆｯﾄｱｯｾﾝ	1	[EXE][EXN] INC.1-8
1	NO PART NO.		CASE,T/C	ｹｰｽ	1	SEE FIG.51
2	NO PART NO.		PUMP-ASSY	ﾎﾟﾝﾌﾟｱｯｾﾝ	1	SEE FIG.52
3	NO PART NO.		CASE,T/M	ｹｰｽ	1	SEE FIG.53
-	NO PART NO.		CASE,T/M	ｹｰｽ	1	[EXE][EXN]SEE FIG.53
4	NO PART NO.		PACK,CLUTCH	ﾊﾟｯｸ	1	SEE FIG.54
5	NO PART NO.		VALVE	ﾊﾞﾙﾌﾞ	1	SEE FIG.55
6	NO PART NO.		VALVE,INCHING	ﾊﾞﾙﾌﾞ	1	SEE FIG.56
7	NO PART NO.		REDUCTION	ﾘﾀﾞｸｼｮﾝ	1	SEE FIG.57
8	NO PART NO.		DIFFERENTIAL	ﾃﾞﾌｧﾚﾝｼｬﾙ	1	SEE FIG.58
9	01184-10035		BOLT	ﾎﾞﾙﾄ	2	A
-	01184-10030		BOLT	ﾎﾞﾙﾄ	7	B
10	01184-10050		BOLT	ﾎﾞﾙﾄ	6	A
-	01184-10050		BOLT	ﾎﾞﾙﾄ	1	B
11	01400-00010		NUT	ﾅｯﾄ	6	A
-	01400-00010		NUT	ﾅｯﾄ	1	B
12	01103-10016		BOLT	ﾎﾞﾙﾄ	8	A
-	01103-08020		BOLT	ﾎﾞﾙﾄ	12	B
13	02011-00010		WASHER	ﾜｯｼｬ	8	A
-	02011-00008		WASHER	ﾜｯｼｬ	12	B

FIG.48 CLUTCH (C-TYPE)

(F5012530) クラッチ

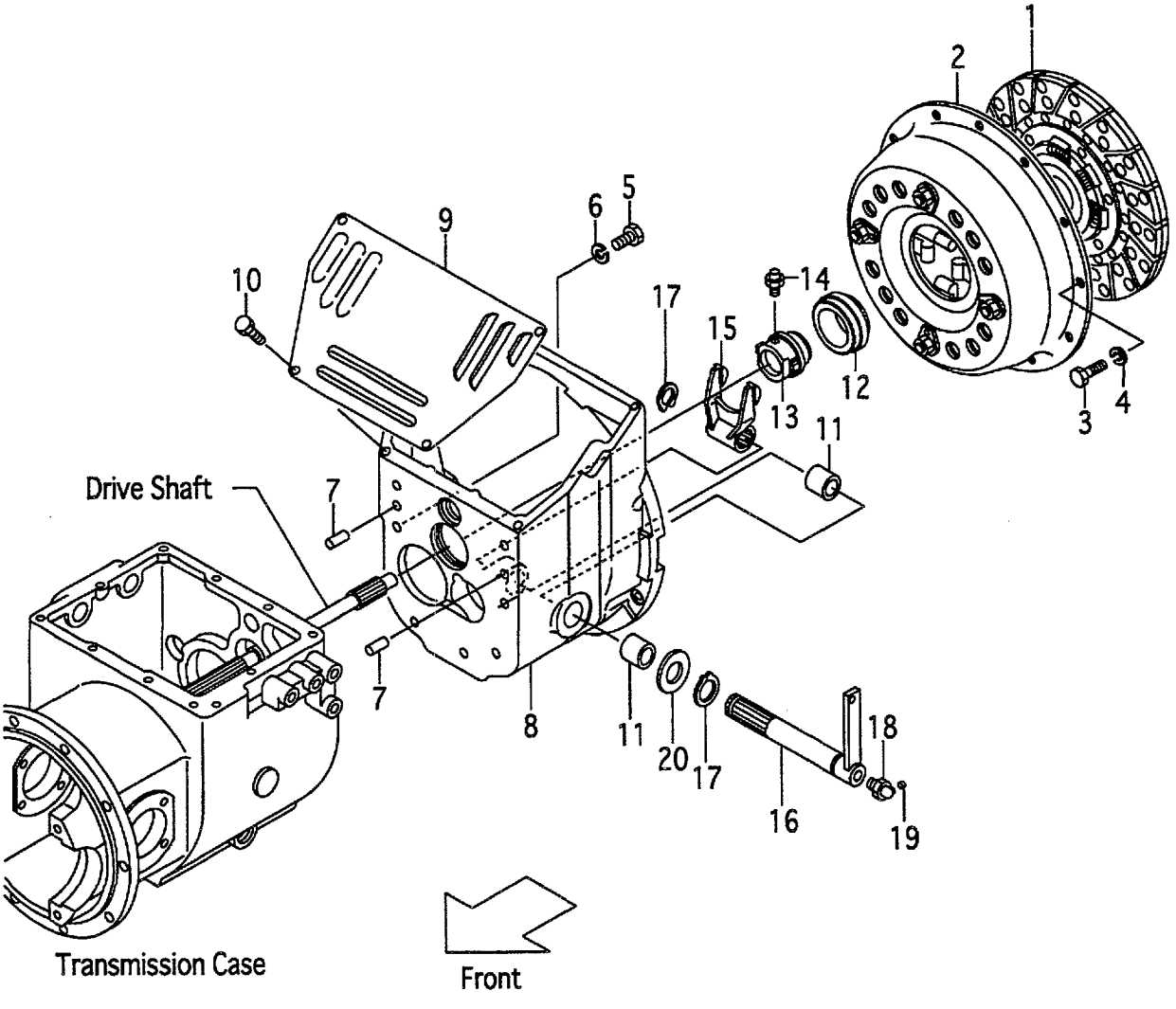

A:FG10C19 FG15C19 FG18C19
B:FD10C19 FD15C19 FD18C19

FIG.48
(F5012530)

Item No	Part No.	Mark	Description		Req'd	Remarks : Serial No.
1	129F3-12041		DISC,CLUTCH	ﾃﾞｨｽｸ	1	
2	120A3-10301		COVER,CLUTCH	ｶﾊﾞｰ	1	
3	01103-08016		BOLT	ﾎﾞﾙﾄ	12	
4	02011-00008		WASHER	ﾜｯｼｬ	12	
5	01103-10030		BOLT	ﾎﾞﾙﾄ	7	
6	02010-00010		WASHER	ﾜｯｼｬ	7	
7	02212-12020		PIN,PARALLEL	ﾋﾟﾝ	2	
8	127A3-12001		HOUSING,CLUTCH	ﾊｳｼﾞﾝｸﾞ	1	
9	124G3-12011		COVER,CLUTCH-HOUSING	ｶﾊﾞｰ	1	
10	01183-08016		BOLT	ﾎﾞﾙﾄ	5	
11	12003-12021		BUSHING	ﾌﾞｯｼﾝｸﾞ	2	
12	15533-10301		BRG,THRUST	ﾍﾞｱﾘﾝｸﾞ	1	
13	113A3-12001		RETAINER,BRG	ﾘﾃｰﾅ	1	
14	04901-00100		FITTING	ﾌｨｯﾃｨﾝｸﾞ	1	
15	114A3-12012		YOKE	ﾖｰｸ	1	
16	114A3-10501		SHAFT	ｼｬﾌﾄ	1	
-	524G2-10502		SHAFT	ｼｬﾌﾄ	1	[PC]
17	02100-00025		RING,SNAP	ｽﾅｯﾌﾟﾘﾝｸﾞ	2	
18	04901-00160		FITTING	ﾌｨｯﾃｨﾝｸﾞ	1	
19	22199-12401		CAP,NIPPLE	ｷｬｯﾌﾟ	2	
20	02000-00024		WASHER	ﾜｯｼｬ	1	

FIG.49 MISSION CASE (C-TYPE)

(F5012540) ミッションケース

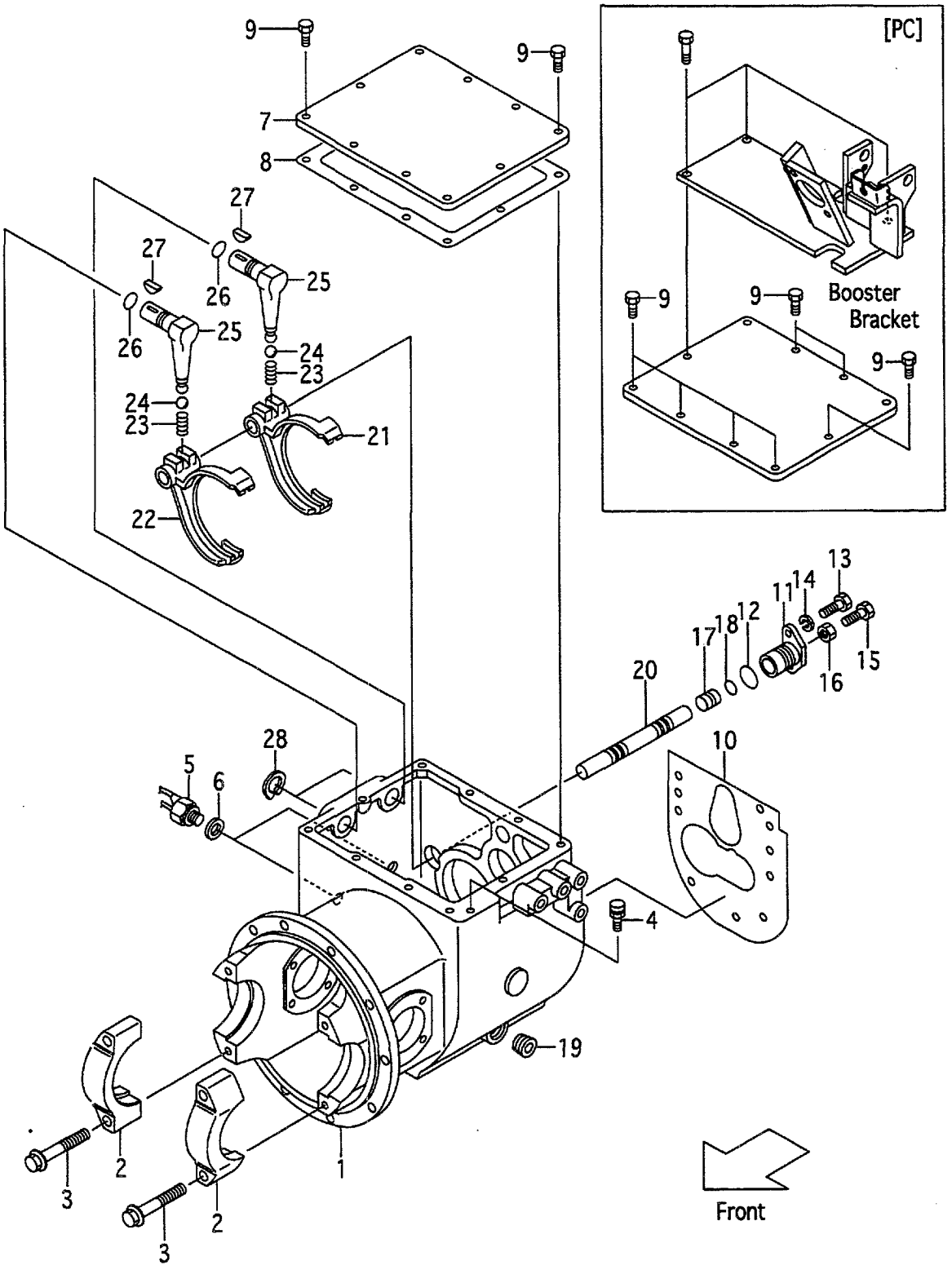

A:FG10C19 FG15C19 FG18C19
B:FD10C19 FD15C19 FD18C19

FIG.49
(F5012540)

Item No	Part No.	Mark	Description		Req'd	Remarks : Serial No.
A1	110F3-40202		CASE-ASSY,T/M		1	INC.1,2
				トランスミッションケースアッセン		
-	116W3-40201		CASE-ASSY,T/M		1	[PC] INC.1,2
				トランスミッションケースアッセン		
1	NO PART NO.	#	CASE,T/M	ケース	1	
-	NO PART NO.	#	CASE,T/M	ケース	1	[PC]
2	15413-22011		CAP,BRG	キャップ	2	
3	116G3-22001		BOLT	ボルト	4	
4	15573-42151		BREATHER,AIR	ブリーザ	1	
5	12003-42451		SWITCH,BACK-LAMP	スイッチ	2	
6	12003-42461		PACKING,BACK-LAMP	パッキング	2	
7	12003-42021		COVER,CASE	カバー	1	
8	12003-42031		GASKET,CASE-COVER	ガスケット	1	
9	01184-10016		BOLT	ボルト	10	
-	01184-10016		BOLT	ボルト	7	[PC]
10	127A3-42011		GASKET,CLUTCH	ガスケット	1	
11	12003-42052		SUPPORT,ARM-SHAFT	サポート	1	
12	03310-00300		O-RING	Oリング	1	
13	01103-08020		BOLT	ボルト	2	
14	02011-00008		WASHER	ワッシャ	2	
15	01123-10045		BOLT	ボルト	1	
16	01400-00010		NUT	ナット	1	
17	12003-42061		SPACER	スペーサ	1	
18	03300-00160		O-RING	Oリング	1	
19	12163-82541		PLUG	プラグ	1	
20	15573-42102		ROD,SHIFT	ロッド	1	
21	15573-42112		FORK,SHIFT	フォーク	1	
22	124G3-42111		FORK,SHIFT	フォーク	1	
23	12003-42421		SPRING	スプリング	2	
24	03190-00013		BALL,STEEL	ボール	2	
25	12003-42521		LEVER,SHIFT	レバー	2	
26	03300-00180		O-RING	Oリング	2	
27	02360-05019		KEY	キー	2	
28	02100-00022		RING,SNAP	スナップリング	2	

FIG.50 MISSION GEAR (C-TYPE)

(F5012550) ミッションギヤー

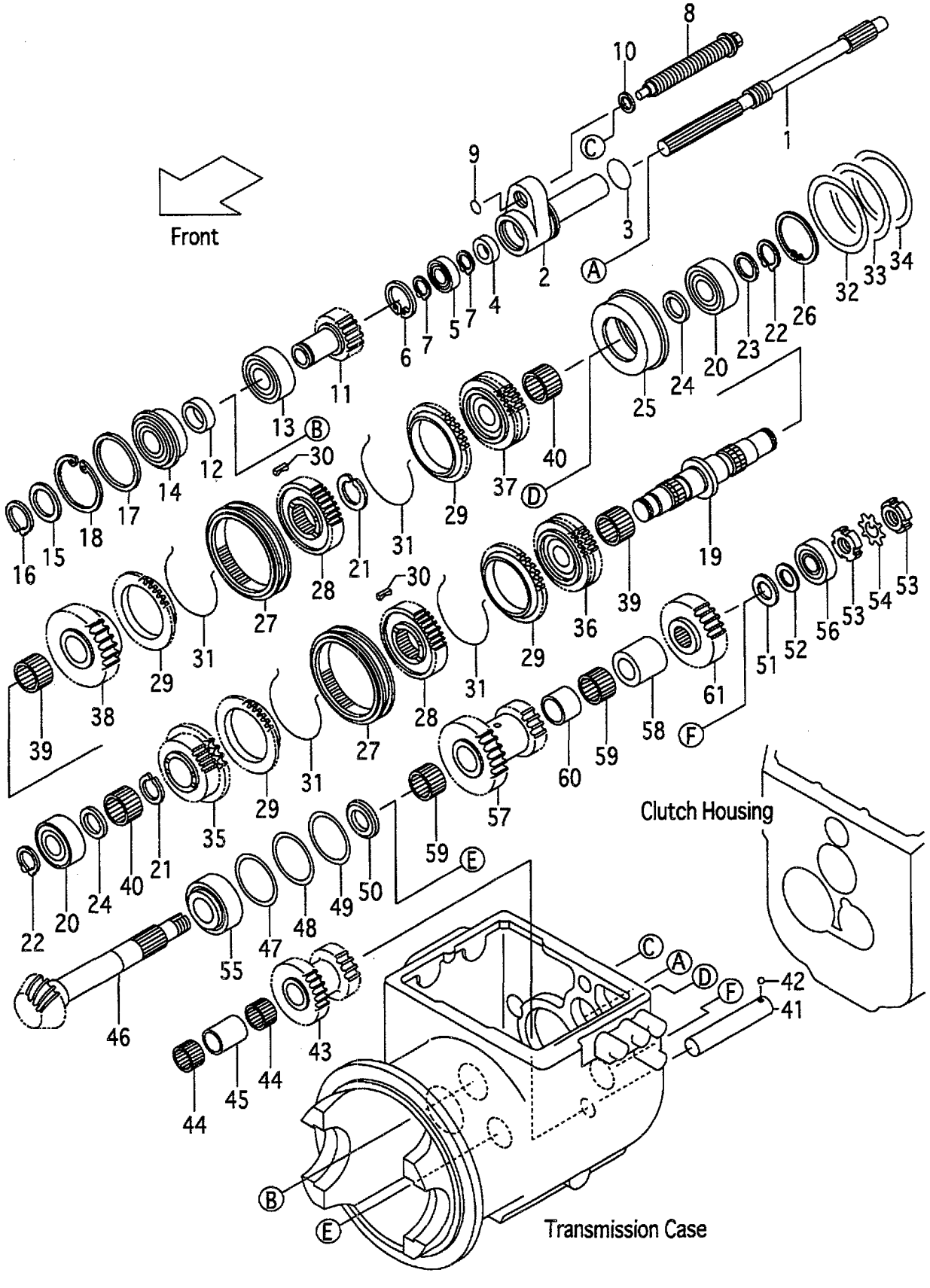

A:FG10C19 FG15C19 FG18C19
B:FD10C19 FD15C19 FD18C19

FIG.50
(F5012550)

Item No	Part No.	Mark	Description		Req'd	Remarks : Serial No.
1	124G3-42031		SHAFT,DRIVE	ｼｬﾌﾄ	1	
2	124G3-42041		RETAINER,BRG	ﾘﾃｰﾅ	1	
3	03300-00360		O-RING	Oﾘﾝｸﾞ	1	
4	03211-02501		SEAL,OIL	ｼｰﾙ	1	
5	03000-06005		BRG,BALL	ﾍﾞｱﾘﾝｸﾞ	1	
6	02110-00047		RING,SNAP	ｽﾅｯﾌﾟﾘﾝｸﾞ	1	
7	02100-00025		RING,SNAP	ｽﾅｯﾌﾟﾘﾝｸﾞ	2	
8	11153-40041		BOLT,SLIDE	ﾎﾞﾙﾄ	1	
9	03300-10220		O-RING	Oﾘﾝｸﾞ	1	
10	10113-40541		WASHER	ﾜｯｼｬ	1	
11	12003-42111		GEAR,INPUT	ｷﾞﾔｰ	1	
12	10113-40161		SPACER	ｽﾍﾟｰｻ	1	
13	03000-06207		BRG,BALL	ﾍﾞｱﾘﾝｸﾞ	1	
14	03006-06207		BRG,BALL	ﾍﾞｱﾘﾝｸﾞ	1	
15	10113-40521		SPACER	ｽﾍﾟｰｻ	1	
16	02100-00035		RING,SNAP	ｽﾅｯﾌﾟﾘﾝｸﾞ	1	
17	10113-40171		WASHER	ﾜｯｼｬ	1	
18	02110-00080		RING,SNAP	ｽﾅｯﾌﾟﾘﾝｸﾞ	1	
19	15573-42091		SHAFT,MAIN	ｼｬﾌﾄ	1	
20	15573-40241		BRG,BALL	ﾍﾞｱﾘﾝｸﾞ	2	
21	02100-00038		RING,SNAP	ｽﾅｯﾌﾟﾘﾝｸﾞ	2	
22	02100-00030		RING,SNAP	ｽﾅｯﾌﾟﾘﾝｸﾞ	2	
23	12003-42481		SPACER	ｽﾍﾟｰｻ	1	
24	12003-42131		PLATE,THRUST	ﾌﾟﾚｰﾄ	2	
25	12003-42142		RETAINER,BRG	ﾘﾃｰﾅ	1	
26	02110-00072		RING,SNAP	ｽﾅｯﾌﾟﾘﾝｸﾞ	1	
A1	15573-40201		SYNCHRONIZER-ASSY	ｼﾝｸﾛﾅｲｻﾞｱｯｾﾝ	2	INC.27-31
27	15573-42041		SLEEVE	ｽﾘｰﾌﾞ	2	
28	15573-42031		HUB,CLUTCH	ﾊﾌﾞ	2	
29	15573-42001		RING,BLOCK	ﾘﾝｸﾞ	4	
30	15573-42011		INSERT	ｲﾝｻｰﾄ	6	
31	15573-42021		SPRING,INSERT	ｽﾌﾟﾘﾝｸﾞ	4	
32	127A3-42101		SHIM,T-0.1	ｼﾑ	2	
33	127A3-42111		SHIM,T-0.2	ｼﾑ	2	
34	127A3-42121		SHIM,T-0.5	ｼﾑ	1	
35	15573-42081		GEAR,HIGE-SPEED	ｷﾞﾔｰ	1	
36	116G3-42211		GEAR,LOW-SPEED	ｷﾞﾔｰ	1	
37	15573-42051		GEAR,FORWARD	ｷﾞﾔｰ	1	
38	15573-42061		GEAR,REVERSE	ｷﾞﾔｰ	1	
39	12003-42241		BRG,NEEDLE	ﾍﾞｱﾘﾝｸﾞ	2	
40	12003-42251		BRG,NEEDLE	ﾍﾞｱﾘﾝｸﾞ	2	
41	12003-42261		SHAFT,IDLER,REVERSE	ｼｬﾌﾄ	1	
42	03190-00008		BALL,STEEL	ﾎﾞｰﾙ	1	
43	12003-42271		GEAR	ｷﾞﾔｰ	1	
44	12003-42281		BRG,NEEDLE	ﾍﾞｱﾘﾝｸﾞ	2	
45	12003-42291		SPACER	ｽﾍﾟｰｻ	1	
46	12083-42301		SHAFT,OUTPUT	ｼｬﾌﾄ	1	
47	12003-42311		SHIM,T-0.5	ｼﾑ	1	
48	12003-42321		SHIM,T-0.2	ｼﾑ	2	
49	12003-42331		SHIM,T-0.1	ｼﾑ	2	

FIG.50 MISSION GEAR (C-TYPE)

(F5012550) ミッションギヤー

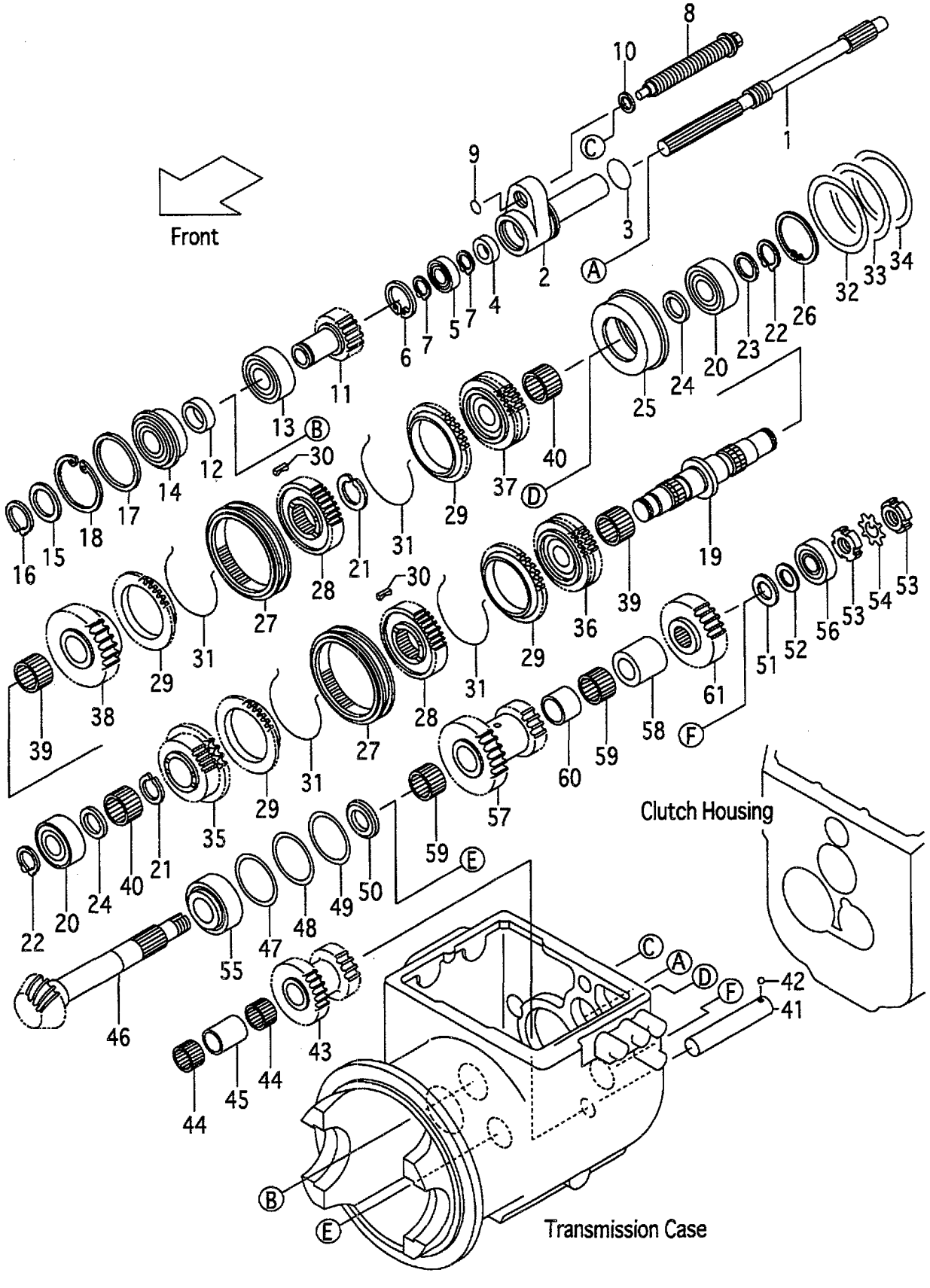

A:FG10C19 FG15C19 FG18C19
B:FD10C19 FD15C19 FD18C19

Item No	Part No.	Mark	Description		Req'd	Remarks : Serial No.
50	12003-42341		PLATE,THRUST	ﾌﾟﾚｰﾄ	1	
51	12003-42361		PLATE,THRUST	ﾌﾟﾚｰﾄ	1	
-	12003-42541		PLATE,THRUST	ﾌﾟﾚｰﾄ	(1)	
-	12003-42551		PLATE,THRUST	ﾌﾟﾚｰﾄ	(1)	
52	20113-40251		WASHER	ﾜｯｼｬ	1	
53	03192-00005		NUT	ﾅｯﾄ	2	
54	03192-10005		WASHER,BRG	ﾜｯｼｬ	1	
55	12003-43031		BRG,TAPER-ROLLER	ﾍﾞｱﾘﾝｸﾞ	1	
56	12003-43001		BRG,TAPER-ROLLER	ﾍﾞｱﾘﾝｸﾞ	1	
57	116G3-42201		GEAR,CLUSTER	ｷﾞﾔｰ	1	
58	12003-42531		SPACER	ｽﾍﾟｰｻ	1	
59	12003-42091		BRG,NEEDLE	ﾍﾞｱﾘﾝｸﾞ	2	
60	12003-42381		SPACER,CLUSTER	ｽﾍﾟｰｻ	1	
61	12003-42391		GEAR,OUTPUT	ｷﾞﾔｰ	1	

FIG.51 TORQUE CONVERTER CASE (T-TYPE)

(F5012560) トルクコンバータケース

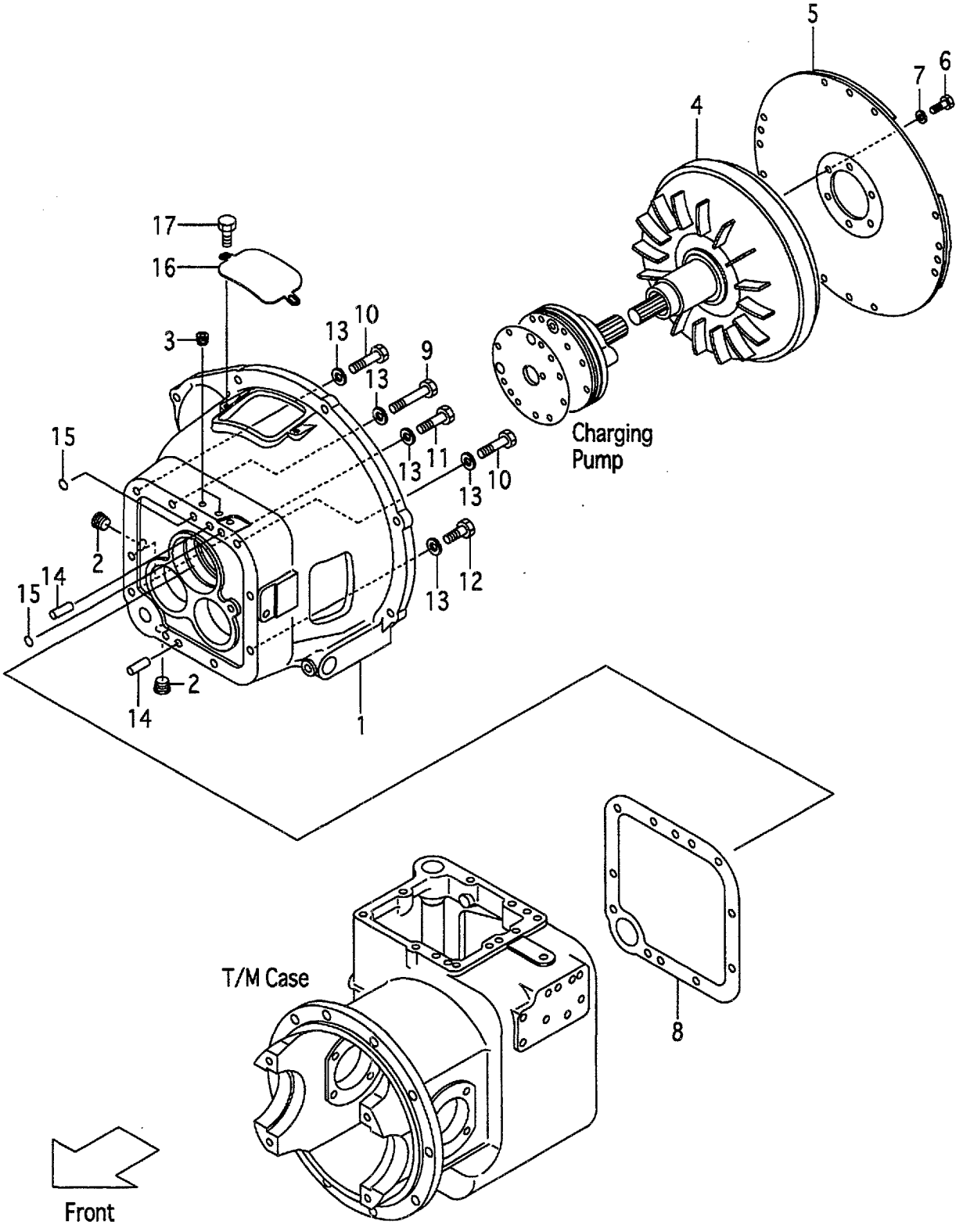

A:FG10T19 FG15T19 FG18T19
B:FD10T19 FD15T19 FD18T19

FIG.51
(F5012560)

Item No	Part No.	Mark	Description		Req'd	Remarks : Serial No.
1	127M3-82102		CASE,TOR-CON	ｹｰｽ	1	
2	12163-82541		PLUG	ﾌﾟﾗｸﾞ	2	
3	116H3-82101		PLUG	ﾌﾟﾗｸﾞ	2	
4	124S3-80301		TORQUE-CONVERTER	ﾄﾙｸｺﾝﾊﾞｰﾀ	1	
5	13683-82022		PLATE,INPUT	ﾌﾟﾚｰﾄ	1	
6	12163-82621		BOLT	ﾎﾞﾙﾄ	6	
7	02003-20010		WASHER	ﾜｯｼｬ	6	
8	11243-82501		GASKET	ｶﾞｽｹｯﾄ	1	
9	01103-10075		BOLT	ﾎﾞﾙﾄ	1	
10	01103-10055		BOLT	ﾎﾞﾙﾄ	2	
11	01103-10050		BOLT	ﾎﾞﾙﾄ	2	
12	01103-10030		BOLT	ﾎﾞﾙﾄ	4	
13	02011-00010		WASHER	ﾜｯｼｬ	9	
14	02212-12020		PIN,PARALLEL	ﾋﾟﾝ	2	
15	15583-82521		O-RING	Oﾘﾝｸﾞ	2	[P11]
16	131M2-52001		COVER	ｶﾊﾞｰ	1	
17	01185-08020		BOLT	ﾎﾞﾙﾄ	2	

FIG.52 CHARGING PUMP (T-TYPE)

(F5012570) ﾁｬｰｼﾞﾝｸﾞﾎﾟﾝﾌﾟ

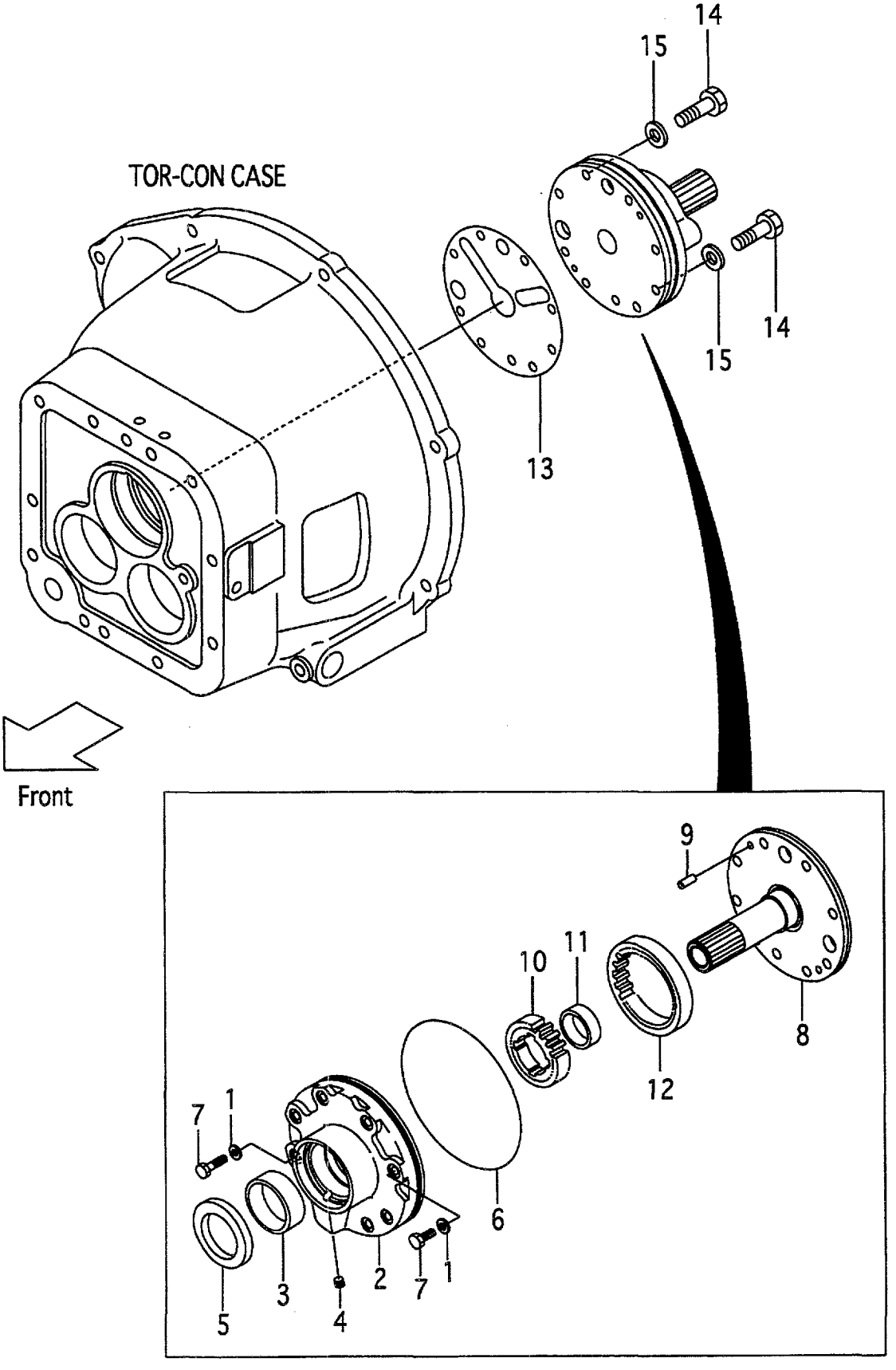

A:FG10T19 FG15T19 FG18T19
B:FD10T19 FD15T19 FD18T19

FIG.52
(F5012570)

Item No	Part No.	Mark	Description		Req'd	Remarks : Serial No.
A1	15583-80221		PUMP-ASSY,CHARGING		1	INC.1-12
				ﾁｬｰｼﾞﾝｸﾞﾎﾟﾝﾌﾟｱｯｾﾝ		
1	12163-82561		PACKING	ﾊﾟｯｷﾝｸﾞ	2	
A2	15583-82141		CASE-ASSY,PUMP	ｹｰｽｱｯｾﾝ	1	INC.2-4
2	15583-82151		CASE,PUMP	ｹｰｽ	1	
3	15583-82161		BUSHING	ﾌﾞｯｼﾝｸﾞ	1	
4	23870-52821		PLUG	ﾌﾟﾗｸﾞ	1	
5	15583-82172		SEAL,OIL	ｼｰﾙ	1	
6	15583-82181		O-RING	Oﾘﾝｸﾞ	1	
7	01103-08035		BOLT	ﾎﾞﾙﾄ	2	
8	15583-82192		SUPPORT,STARTER	ｻﾎﾟｰﾄ	1	
9	02212-06016		PIN,PARALLEL	ﾋﾟﾝ	2	
A3	15583-82211		KIT,GEAR	ｷﾞﾔｰｷｯﾄ	1	INC.10-12
A4	15583-82221		SUB-ASSY,DRIVE-GEAR		1	INC.10,11
				ﾄﾞﾗｲﾌﾞｷﾞﾔｰｻﾌﾞｱｯｾﾝ		
10	15583-82231		GEAR,DRIVE	ｷﾞﾔｰ	1	
11	15583-82241		BUSHING	ﾌﾞｯｼﾝｸﾞ	1	
12	15583-82251		GEAR,DRIVEN	ｷﾞﾔｰ	1	
13	15583-82201		GASKET	ｶﾞｽｹｯﾄ	1	
14	01103-08045		BOLT	ﾎﾞﾙﾄ	6	
15	12163-82561		PACKING	ﾊﾟｯｷﾝｸﾞ	6	

FIG.53 MISSION CASE (T-TYPE)

(F5012580) ミッションケース

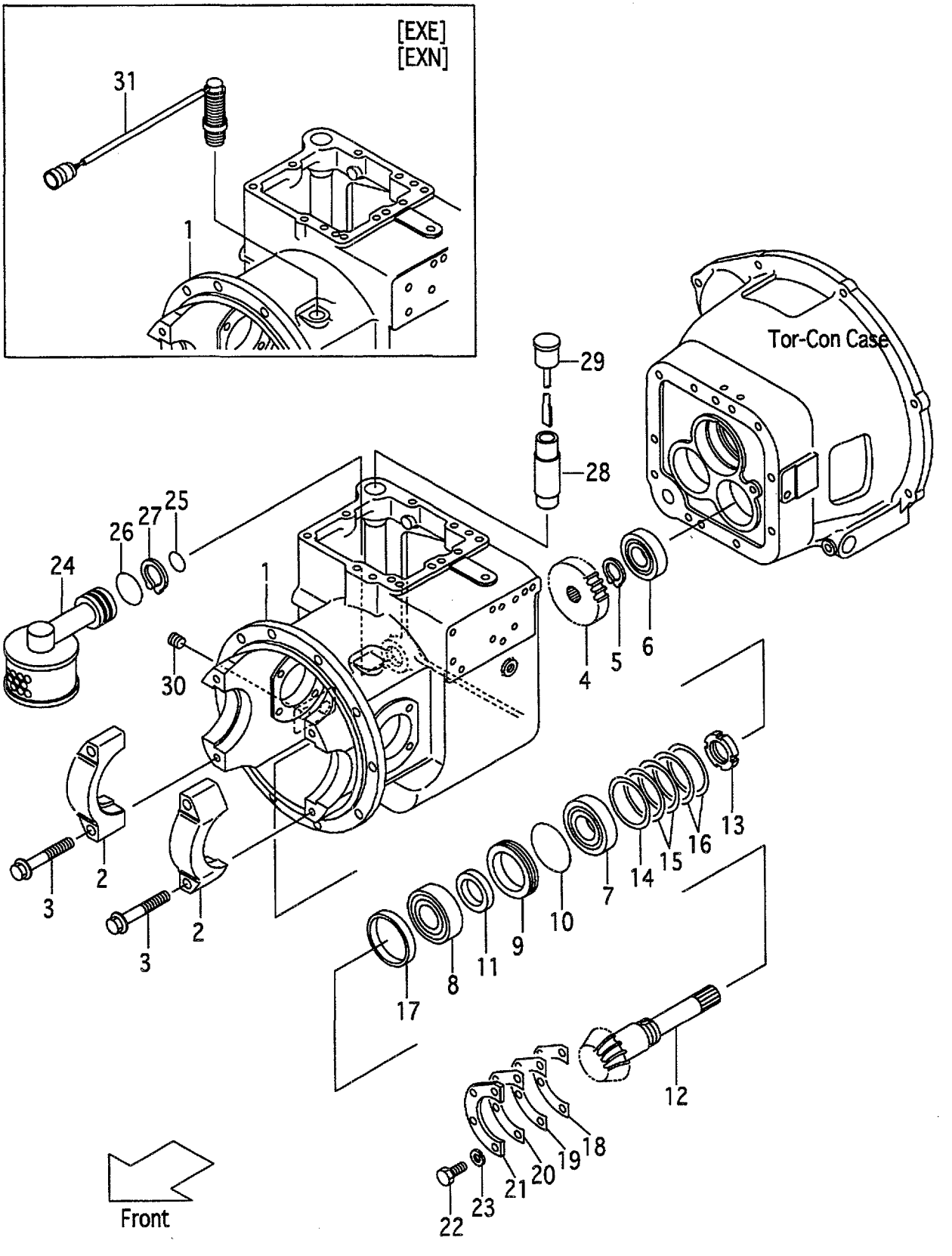

A:FG10T19 FG15T19 FG18T19
B:FD10T19 FD15T19 FD18T19

FIG.53
(F5012580)

Item No	Part No.	Mark	Description		Req'd	Remarks : Serial No.
A1	15583-80231		CASE-ASSY,T/M		1	INC.1,2
				トランスミッションケースアッセン		
-	116H3-80231		CASE-ASSY,T/M		1	[EXE][EXN] INC.1,2
				トランスミッションケースアッセン		
1	NO PART NO.	#	CASE,T/M	ケース	1	
-	NO PART NO.	#	CASE,T/M	ケース	1	[EXE][EXN]
2	15413-22011		CAP,BRG	キャップ	2	
3	116G3-22001		BOLT	ボルト	4	
4	12163-42231		GEAR,OUTPUT	ギヤー	1	
5	02110-00024		RING,SNAP	スナップリング	1	
6	03000-06207		BRG,BALL	ベアリング	1	
7	12003-43021		BRG,TAPER-ROLLER	ベアリング	1	
8	12003-43031		BRG,TAPER-ROLLER	ベアリング	1	
9	12163-82121		RETAINER,OIL-SEAL	リテーナ	1	
10	15583-82531		O-RING	Oリング	1	[G75]
11	12163-82131		SEAL,OIL	シール	1	
12	14243-82011		SHAFT,OUTPUT	シャフト	1	
13	11243-82621		NUT	ナット	1	
14	12163-82501		SHIM,T-0.5	シム	1	
15	12163-82511		SHIM,T-0.2	シム	2	
16	12163-82521		SHIM,T-0.1	シム	2	
17	12163-82191		COLLAR	カラー	1	
18	12163-82571		SHIM,T-0.1	シム	1	
19	12163-82581		SHIM,T-0.2	シム	1	
20	12163-82591		SHIM,T-0.5	シム	1	
21	12163-82151		PLATE,BRG-SUPPORT	プレート	1	
22	01103-08020		BOLT	ボルト	4	
23	02011-00008		WASHER	ワッシャ	4	
24	127M3-82151		STRAINER	ストレーナ	1	
25	15583-82541		O-RING	Oリング	1	[P22A]
26	15583-82551		O-RING	Oリング	1	[G30]
27	02100-00035		RING,SNAP	スナップリング	1	
28	12163-82221		PIPE,OIL-FILL	パイプ	1	
29	12163-82232		CAP,OIL-FILL	キャップ	1	
30	12163-82541		PLUG	プラグ	2	
31	16402-54331		SENSOR	センサ	1	[EXE][EXN]

FIG.54 CLUTCH PACK (T-TYPE)

(F5012590) クラッチパック

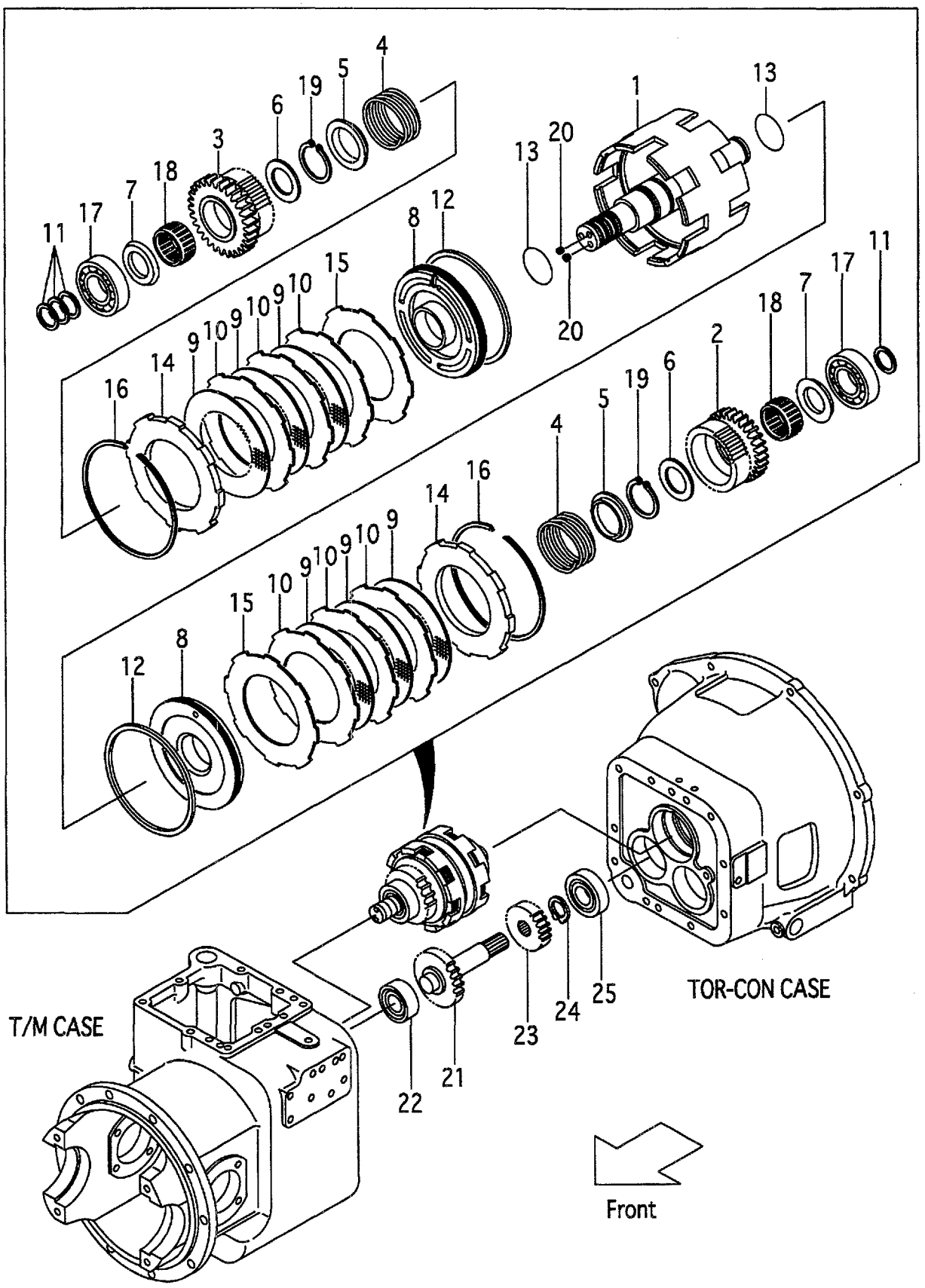

A:FG10T19 FG15T19 FG18T19
B:FD10T19 FD15T19 FD18T19

Item No	Part No.	Mark	Description		Req'd	Remarks : Serial No.
A1	11243-80201		CLUTCH-ASSY,HYD.	ｸﾗｯﾁｱｯｾﾝ	1	INC.1-20
1	11243-80211		SHAFT,INPUT	ｼｬﾌﾄ	1	
2	11243-82051		GEAR,FORWARD	ｷﾞﾔｰ	1	
3	11243-82061		GEAR,REVERSE	ｷﾞﾔｰ	1	
4	11243-82081		SPRING,RETURN	ｽﾌﾟﾘﾝｸﾞ	2	
5	11243-82091		SEAT,SPRING	ｼｰﾄ	2	
6	11243-82101		RING,THRUST,A	ﾘﾝｸﾞ	2	
7	123S3-82091		RING,THRUST,B	ﾘﾝｸﾞ	2	
8	11243-80221		PISTON	ﾋﾟｽﾄﾝ	2	
9	11243-82141		PLATE,FRICTION	ﾌﾟﾚｰﾄ	6	
10	123S3-82111		PLATE,SEPALATOR	ﾌﾟﾚｰﾄ	6	
11	11243-82161		RING,SEAL,A	ﾘﾝｸﾞ	4	
12	11243-82171		RING,SEAL,B	ﾘﾝｸﾞ	2	
13	11243-82211		O-RING	Oﾘﾝｸﾞ	2	[P34]
14	110G3-82001		PLATE,END	ﾌﾟﾚｰﾄ	2	
15	15583-82621		PLATE,CONICAL	ﾌﾟﾚｰﾄ	2	
16	11243-82181		RING,SNAP	ｽﾅｯﾌﾟﾘﾝｸﾞ	2	
17	03000-06206		BRG,BALL	ﾍﾞｱﾘﾝｸﾞ	2	
18	11243-82201		BRG,NEEDLE	ﾍﾞｱﾘﾝｸﾞ	2	
19	02100-00040		RING,SNAP	ｽﾅｯﾌﾟﾘﾝｸﾞ	2	
20	01066-08008		PLUG	ﾌﾟﾗｸﾞ	2	
21	12163-42201		SHAFT,IDLER	ｼｬﾌﾄ	1	
22	03000-06206		BRG,BALL	ﾍﾞｱﾘﾝｸﾞ	1	
23	12163-42211		GEAR,IDLER	ｷﾞﾔｰ	1	
24	02110-00024		RING,SNAP	ｽﾅｯﾌﾟﾘﾝｸﾞ	1	
25	03000-06207		BRG,BALL	ﾍﾞｱﾘﾝｸﾞ	1	

FIG.55 CONTROL VALVE (T-TYPE)

(F50125A0) コントロールバルブ

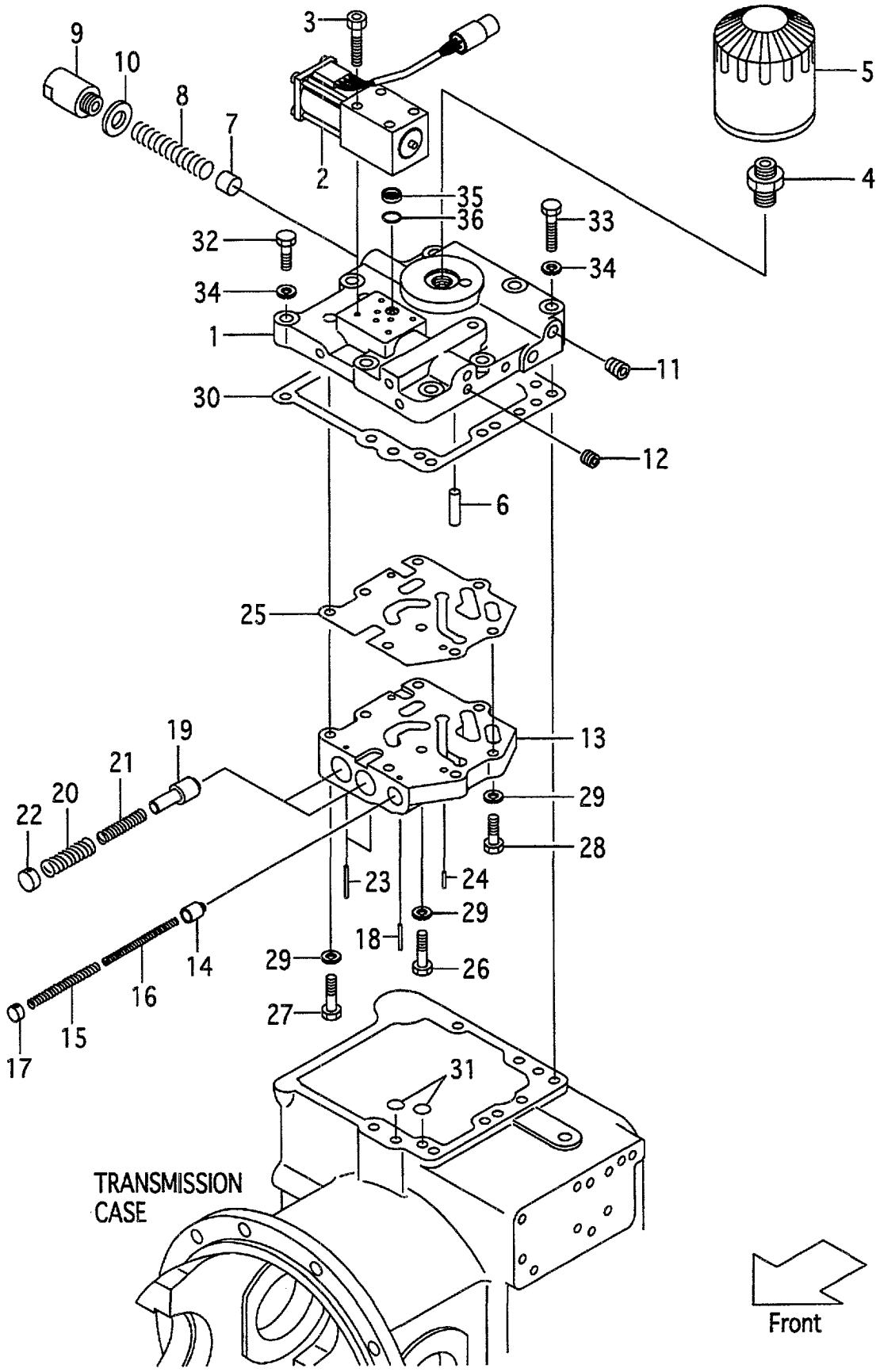

A:FG10T19 FG15T19 FG18T19
B:FD10T19 FD15T19 FD18T19

FIG.55
(F50125A0)

Item No	Part No.	Mark	Description		Req'd	Remarks : Serial No.
1	116H3-82301		COVER,CASE	ｶﾊﾞｰ	1	(OLD PART)
-	116H3-82302		COVER,CASE	ｶﾊﾞｰ	1	(NEW PART)
2	135L3-82001		VALVE,SOLENOID	ﾊﾞﾙﾌﾞ	1	
3	01170-05045		BOLT	ﾎﾞﾙﾄ	4	
4	12163-82311		NIPPLE	ﾆｯﾌﾟﾙ	1	
5	12163-82302		FILTER,OIL	ﾌｨﾙﾀ	1	
6	115G3-82141		PIN	ﾋﾟﾝ	1	
7	12163-82321		PISTON	ﾋﾟｽﾄﾝ	1	
8	12163-82331		SPRING	ｽﾌﾟﾘﾝｸﾞ	1	
9	12163-82341		CUP	ｶｯﾌﾟ	1	
10	12163-82421		PACKING	ﾊﾟｯｷﾝｸﾞ	1	
11	116H3-82101		PLUG	ﾌﾟﾗｸﾞ	4	
12	116H3-82201		PLUG	ﾌﾟﾗｸﾞ	7	
A1	116H3-80351		VALVE-ASSY,CONTROL	ｺﾝﾄﾛｰﾙﾊﾞﾙﾌﾞｱｯｾﾝ	1	INC.13-23
13	NO PART NO.	#	BODY,VALVE	ﾎﾞﾃﾞｨ	1	
14	15583-82402		PISTON	ﾋﾟｽﾄﾝ	1	
15	15583-82411		SPRING	ｽﾌﾟﾘﾝｸﾞ	1	
16	15583-82421		SPRING	ｽﾌﾟﾘﾝｸﾞ	1	
17	15583-82431		PLUG	ﾌﾟﾗｸﾞ	1	
18	02270-04035	*	PIN,SPRING	ﾋﾟﾝ	1	
19	15583-82441		SPOOL	ｽﾌﾟｰﾙ	2	
20	15583-82451		SPRING	ｽﾌﾟﾘﾝｸﾞ	2	
21	15583-82461		SPRING	ｽﾌﾟﾘﾝｸﾞ	2	
22	15583-82471		PLUG	ﾌﾟﾗｸﾞ	2	
23	02270-04040	*	PIN,SPRING	ﾋﾟﾝ	2	
24	02212-06016		PIN,PARALLEL	ﾋﾟﾝ	2	
25	116H3-82361	*	GASKET	ｶﾞｽｹｯﾄ	1	
26	01103-08055		BOLT	ﾎﾞﾙﾄ	3	
27	01103-08050		BOLT	ﾎﾞﾙﾄ	3	
28	01103-08035		BOLT	ﾎﾞﾙﾄ	2	
29	02011-00008		WASHER	ﾜｯｼｬ	8	
30	11243-82531	*	GASKET	ｶﾞｽｹｯﾄ	1	
31	15583-82571		O-RING	Oﾘﾝｸﾞ	2	
32	01103-10055		BOLT	ﾎﾞﾙﾄ	2	
33	01103-10040		BOLT	ﾎﾞﾙﾄ	6	
34	02010-00010		WASHER	ﾜｯｼｬ	8	
35	139B3-82161		FILTER,COIN	ﾌｨﾙﾀ	1	(NEW PART)
36	139B3-82151		O-RING	Oﾘﾝｸﾞ	1	(NEW PART)
K1	118H3-89811		KIT,REPAIR	ﾘﾍﾟｱｷｯﾄ	1	INC.18,23,25,30

FIG.56 INCHING VALVE (T-TYPE)

(F50125B0) インチング バルブ

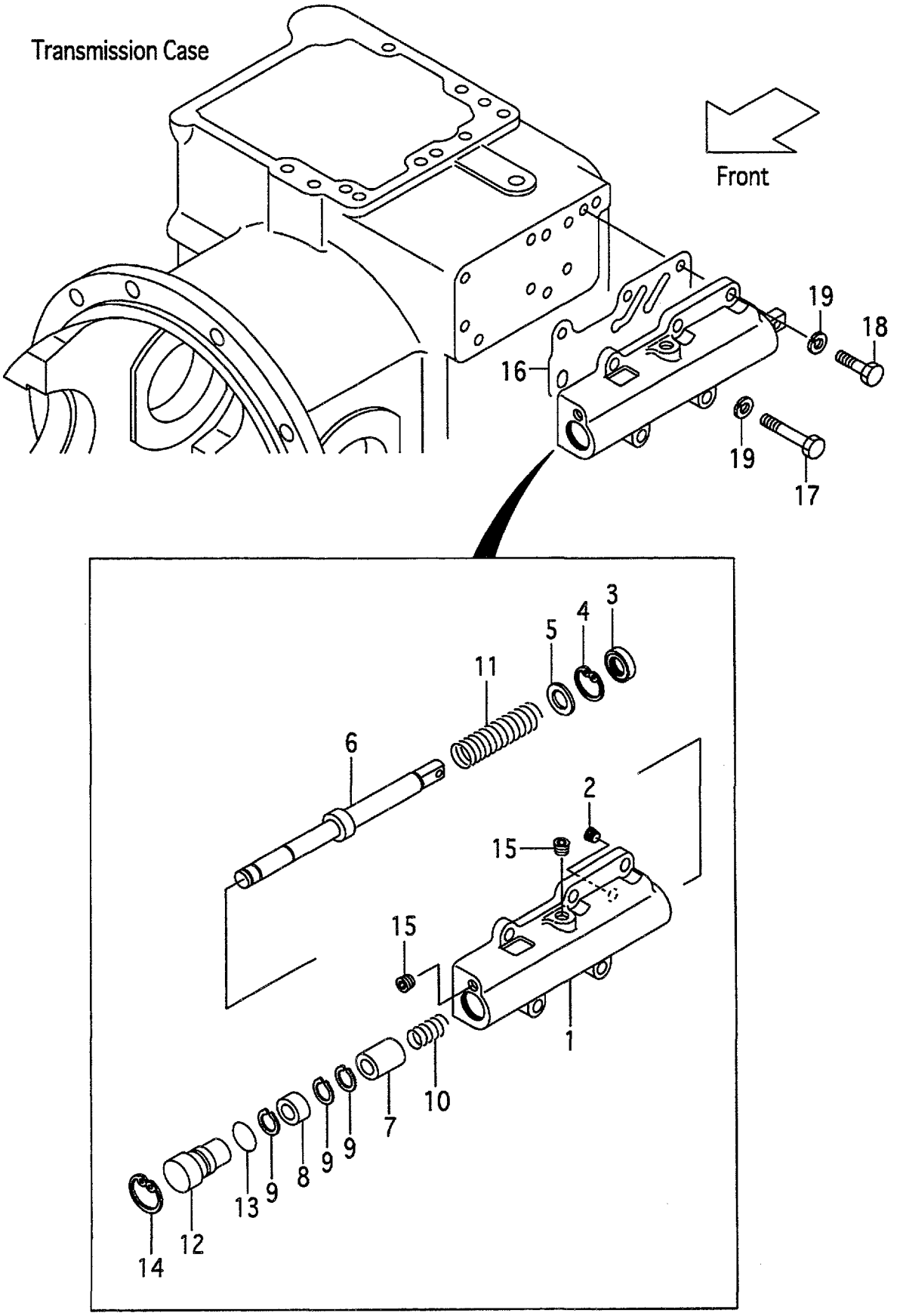

A:FG10T19 FG15T19 FG18T19
B:FD10T19 FD15T19 FD18T19

FIG.56
(F50125B0)

Item No	Part No.	Mark	Description		Req'd	Remarks : Serial No.
A1	118H3-80401		VALVE-ASSY,INCHING	ﾊﾞﾙﾌﾞｱｯｾﾝ	1	INC.1-15
1	118H3-82201		BODY,VALVE	ﾎﾞﾃﾞｨ	1	
2	15793-82861		PLUG,CHOKE	ﾌﾟﾗｸﾞ	1	
3	15943-82661		SEAL,OIL	ｼｰﾙ	1	
4	02110-00030		RING,SNAP	ｽﾅｯﾌﾟﾘﾝｸﾞ	1	
5	15943-82651		SPACER	ｽﾍﾟｰｻ	1	
6	115G3-82512		SPOOL,INCHING	ｽﾌﾟｰﾙ	1	
7	15793-82321		PLUNGER	ﾌﾟﾗﾝｼﾞｬ	1	
8	115G3-82522		PISTON	ﾋﾟｽﾄﾝ	1	
9	02100-00012		RING,SNAP	ｽﾅｯﾌﾟﾘﾝｸﾞ	3	
10	15793-82341		SPRING	ｽﾌﾟﾘﾝｸﾞ	1	
11	115G3-82491		SPRING	ｽﾌﾟﾘﾝｸﾞ	1	
12	118H3-82211		PLUG	ﾌﾟﾗｸﾞ	1	
13	118H3-82231		O-RING	Oﾘﾝｸﾞ	1	
14	02110-00028		RING,SNAP	ｽﾅｯﾌﾟﾘﾝｸﾞ	1	
15	116H3-82201		PLUG	ﾌﾟﾗｸﾞ	2	
16	118H3-82221		GASKET	ｶﾞｽｹｯﾄ	1	
17	01103-08050		BOLT	ﾎﾞﾙﾄ	2	
18	01103-08025		BOLT	ﾎﾞﾙﾄ	3	
19	02011-00008		WASHER	ﾜｯｼｬ	5	

FIG.57 REDUCTION

(F50125C0) ﾘﾀﾞｸｼｮﾝ

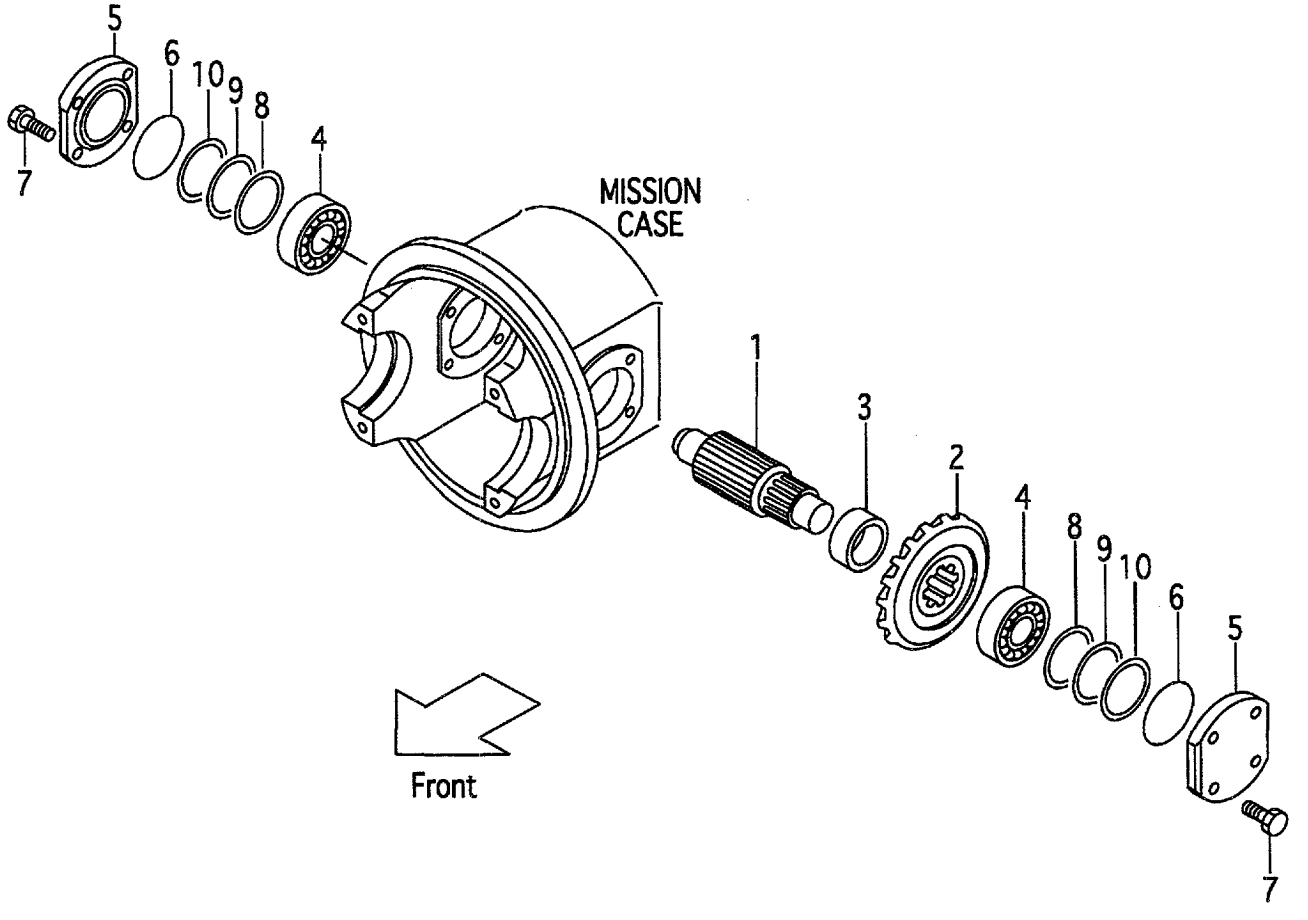

FIG.57
(F50125C0)

A:FG10C19 FG10T19 FG15C19 FG15T19 FG18C19 FG18T19
B:FD10C19 FD10T19 FD15C19 FD15T19 FD18C19 FD18T19

Item No	Part No.	Mark	Description		Req'd	Remarks : Serial No.
1	12003-22011		SHAFT,FINAL-PINION	ｼｬﾌﾄ	1	
2	12083-22031		GEAR,SPIRAL-BEVEL	ｷﾞｬｰ	1	
3	12003-22041		SPACER	ｽﾍﾟｰｻ	1	
4	12003-43011		BRG,TAPER-ROLLER	ﾍﾞｱﾘﾝｸﾞ	2	
5	12003-22051		COVER,BRG	ｶﾊﾞｰ	2	
6	03310-00700		O-RING	Oﾘﾝｸﾞ	2	
7	01184-10025		BOLT	ﾎﾞﾙﾄ	8	
8	15413-22081		SHIM,T-0.5	ｼﾑ	2	
9	15413-22091		SHIM,T-0.2	ｼﾑ	4	
10	15413-22101		SHIM,T-0.1	ｼﾑ	2	

FIG.58 DIFFERENTIAL
(F50125D0) ﾃﾞｨﾌｧﾚﾝｼｬﾙ

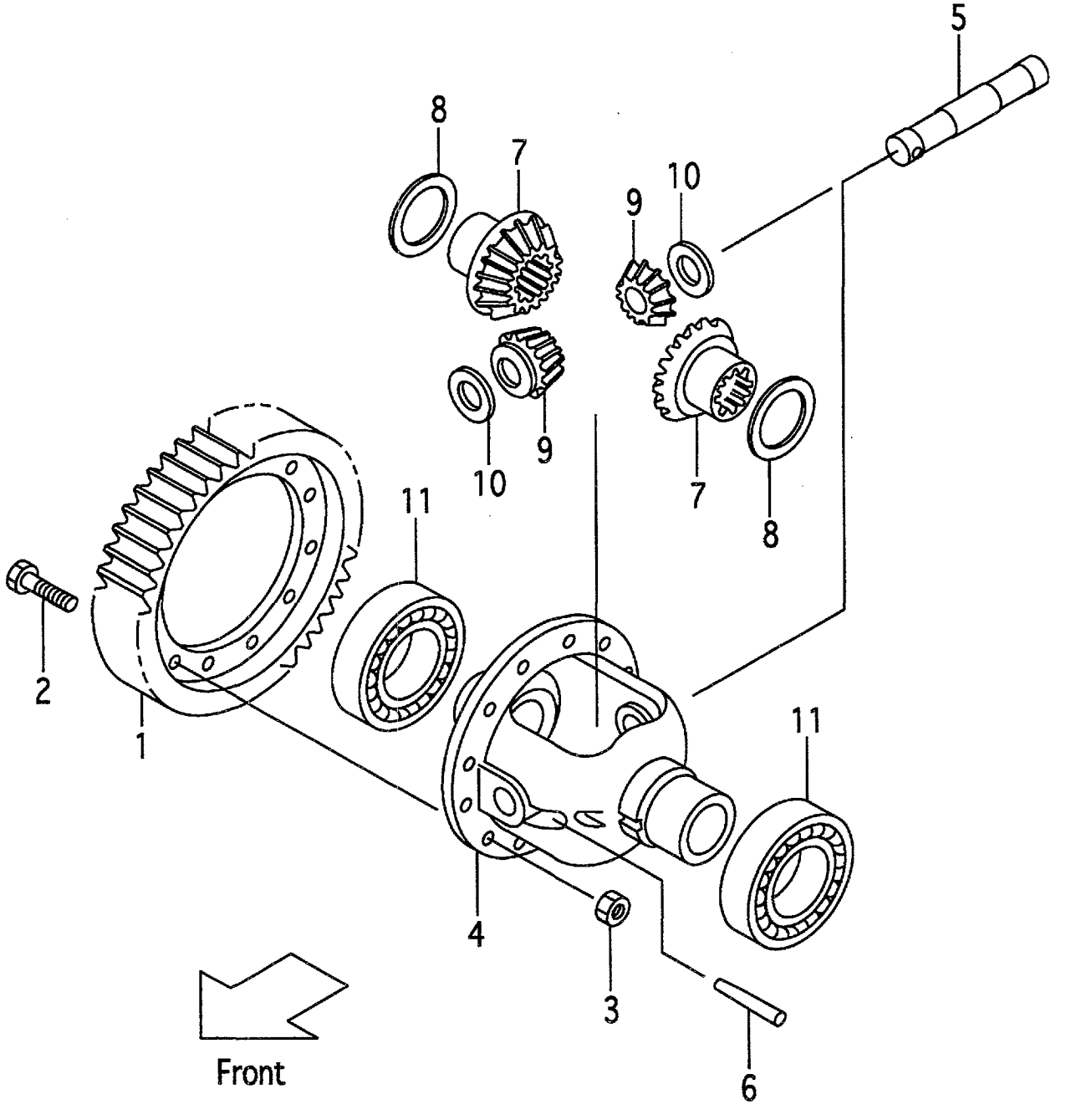

A:FG10C19 FG10T19 FG15C19 FG15T19 FG18C19 FG18T19
B:FD10C19 FD10T19 FD15C19 FD15T19 FD18C19 FD18T19

Item No	Part No.	Mark	Description		Req'd	Remarks : Serial No.
1	17243-53002		GEAR,RING	ｷﾞﾔｰ	1	
2	10113-50112		BOLT	ﾎﾞﾙﾄ	12	
3	15583-82601		NUT	ﾅｯﾄ	12	
4	12193-50011		CASE,CROSS	ｹｰｽ	1	
5	10193-50032		SHAFT,PINION	ｼｬﾌﾄ	1	
6	02242-06055		PIN,TAPER	ﾋﾟﾝ	1	
7	110F3-52001		GEAR,SIDE	ｷﾞﾔｰ	2	
8	20113-50181		WASHER,A,SIDE-GEAR	ﾜｯｼｬ	2	
-	20113-51181		WASHER,B,SIDE-GEAR	ﾜｯｼｬ	(2)	
-	20113-52181		WASHER,C,SIDE-GEAR	ﾜｯｼｬ	(2)	
-	20113-53181		WASHER,D,SIDE-GEAR	ﾜｯｼｬ	(2)	
9	110F3-52011		GEAR,PINION	ｷﾞﾔｰ	2	
10	15413-52081		WASHER,THRUST,T-1.8	ﾜｯｼｬ	2	
-	15413-52091		WASHER,THRUST,T-2.0	ﾜｯｼｬ	(2)	
-	15413-52101		WASHER,THRUST,T-2.2	ﾜｯｼｬ	(2)	
11	03000-06211		BRG,BALL	ﾍﾞｱﾘﾝｸﾞ	2	

FIG.59 DRIVE AXLE

(F5013010) ﾄﾞﾗｲﾌﾞｱｸｽﾙ

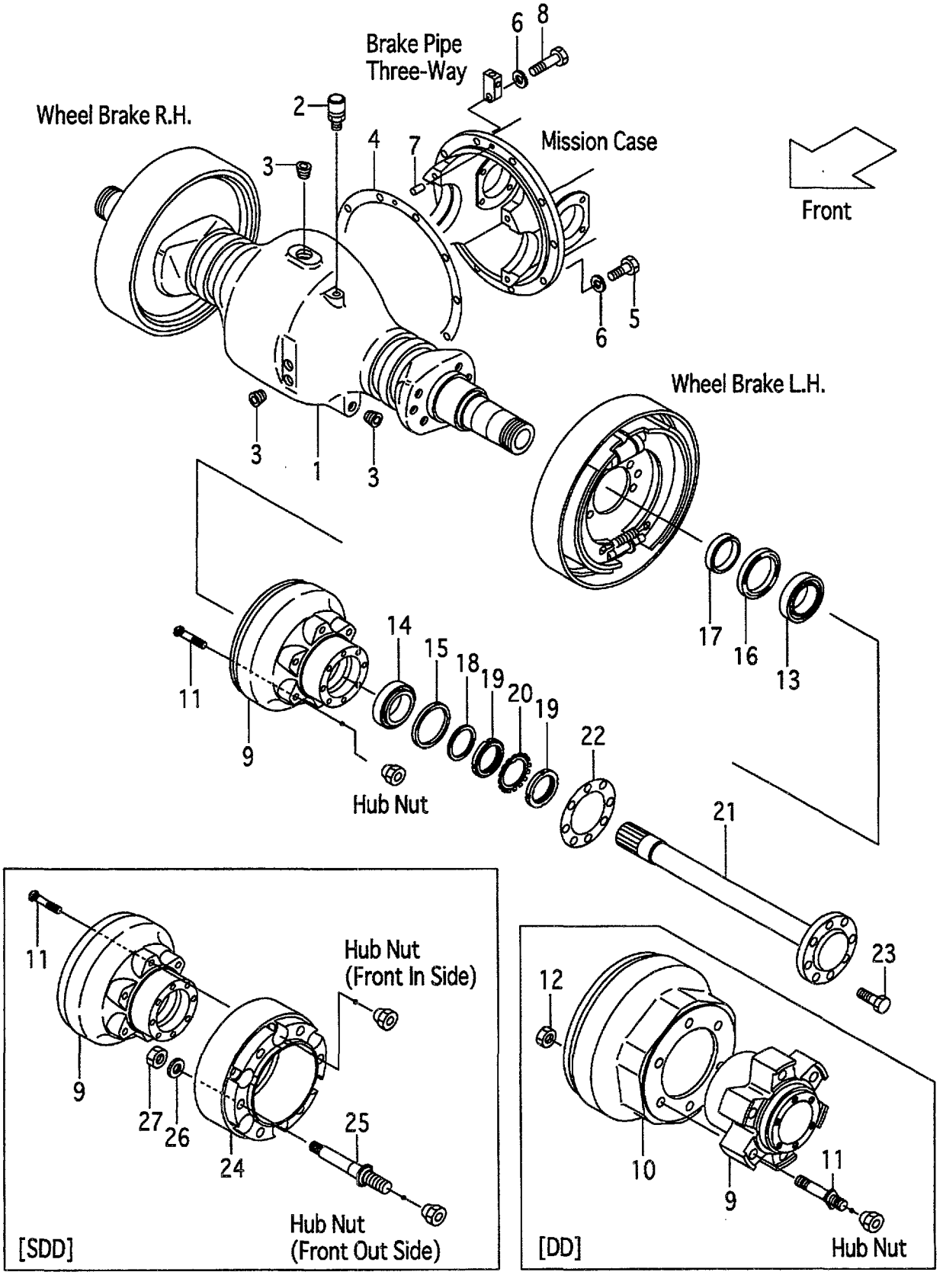

A:FG10C19 FG10T19 FG15C19 FG15T19 FG18C19 FG18T19
B:FD10C19 FD10T19 FD15C19 FD15T19 FD18C19 FD18T19

Item No	Part No.	Mark	Description		Req'd	Remarks : Serial No.
1	216G3-02001		HOUSING,AXLE	ﾊｳｼﾞﾝｸﾞ	1	
-	516G7-52011		HOUSING,AXLE	ﾊｳｼﾞﾝｸﾞ	1	[SM][SAS]
2	15573-42151		BREATHER,AIR	ﾌﾞﾘｰｻﾞ	1	
3	22193-03001		PLUG	ﾌﾟﾗｸﾞ	4	
4	25592-52002		PACKING	ﾊﾟｯｷﾝｸﾞ	1	
5	01100-10035		BOLT	ﾎﾞﾙﾄ	9	
6	02011-00010		WASHER	ﾜｯｼｬ	10	
7	02212-08020		PIN,PARALLEL	ﾋﾟﾝ	1	
8	01100-10050		BOLT	ﾎﾞﾙﾄ	1	
9	216G3-02051		HUB & DRUM	ﾊﾌﾞ&ﾄﾞﾗﾑ	2	
-	54237-42042		HUB,FRONT	ﾊﾌﾞ	2	[DD]
10	54237-42072		DRUM,BRAKE	ﾄﾞﾗﾑ	2	[DD]
11	216G3-02061		BOLT,HUB	ﾎﾞﾙﾄ	12	
-	54237-42061		BOLT,HUB	ﾎﾞﾙﾄ	12	[DD]
12	01400-10012		NUT	ﾅｯﾄ	12	[DD]
13	03071-30213		BRG,TAPER-ROLLER	ﾍﾞｱﾘﾝｸﾞ	2	
14	23453-02071		BRG,TAPER-ROLLER	ﾍﾞｱﾘﾝｸﾞ	2	INC.15
15	23453-02131		SEAL,OIL	ｼｰﾙ	2	
16	23653-02001		SEAL,OIL	ｼｰﾙ	2	
17	22513-02051		RETAINER	ﾘﾃｰﾅ	2	
18	23453-02091		WASHER	ﾜｯｼｬ	2	
19	03192-00012		NUT,BRG	ﾅｯﾄ	4	
20	03192-10012		WASHER,BRG	ﾜｯｼｬ	2	
21	24843-02011		SHAFT,DRIVE	ｼｬﾌﾄ	2	
22	24843-02062		PACKING	ﾊﾟｯｷﾝｸﾞ	2	
23	24453-02061		BOLT,REAMER	ﾎﾞﾙﾄ	16	
24	54237-43001		SPACER	ｽﾍﾟｰｻ	2	[SDD]
25	54237-43011		BOLT,HUB	ﾎﾞﾙﾄ	12	[SDD]
26	02000-00012		WASHER	ﾜｯｼｬ	12	[SDD]
27	01400-10012		NUT	ﾅｯﾄ	12	[SDD]

FIG.60 WHEEL BRAKE

(F5013710) ホイールブレーキ

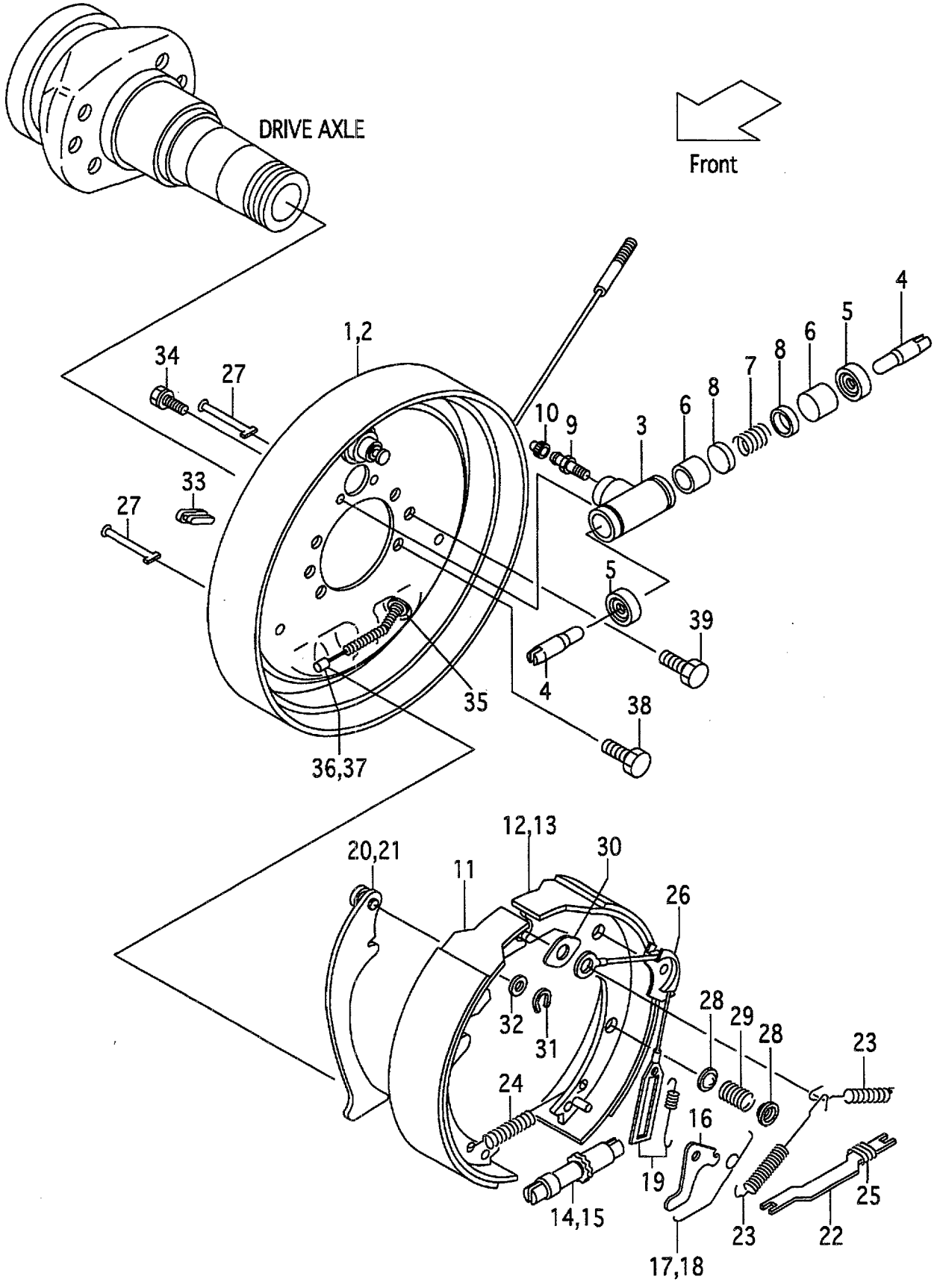

A:FG10C19 FG10T19 FG15C19 FG15T19 FG18C19 FG18T19
B:FD10C19 FD10T19 FD15C19 FD15T19 FD18C19 FD18T19

Item No	Part No.	Mark	Description		Req'd	Remarks : Serial No.
A1	51232-60503		BRAKE-ASSY,WHEEL,RH	ﾌﾞﾚｰｷｱｯｾﾝ	1	INC.1,3-12,14,16,17,19,20, 22-36
A2	51232-60513		BRAKE-ASSY,WHEEL,LH	ﾌﾞﾚｰｷｱｯｾﾝ	1	INC.2-11,13,15,16,18,19, 21-35,37
A3	C-52-12504-20001		BRAKE-ASSY,RH	ﾌﾞﾚｰｷｱｯｾﾝ	1	INC.1,3-12,14,16,17,19,20, 22-34
A4	C-52-12504-10001		BRAKE-ASSY,LH	ﾌﾞﾚｰｷｱｯｾﾝ	1	INC.2-11,13,15,16,18,19,21-34
1	C-52-11031-21001		PLATE,RH	ﾌﾟﾚｰﾄ	1	
2	C-52-11031-11001		PLATE,LH	ﾌﾟﾚｰﾄ	1	
A5	C-52-11029-52000		CYL-ASSY,WHEEL	ﾎｲｰﾙｼﾘﾝﾀﾞｱｯｾﾝ	2	INC.3-10
3	C-52-11003-02380		CYLINDER	ｼﾘﾝﾀﾞ	2	
4	C-52-11003-02380		LINK	ﾘﾝｸ	4	
5	C-52-11001-02310	*	BOOT	ﾌﾞｰﾂ	4	
6	C-52-11003-02210	*	PISTON	ﾋﾟｽﾄﾝ	4	
7	C-52-10901-52264	*	SPRING	ｽﾌﾟﾘﾝｸﾞ	2	
8	C-90-5522-0140	*	CUP	ｶｯﾌﾟ	4	
9	C-51-B2101-02322		SCREW	ｽｸﾘｭ	2	
10	C-52-30780-02340		CAP,BLEEDER	ｷｬｯﾌﾟ	2	
11	C-52-11036-73002	*	SHOE & LINING	ｼｭｰ & ﾗｲﾆﾝｸﾞ	2	
12	C-52-11036-83022	*	SHOE & LINING,RH	ｼｭｰ & ﾗｲﾆﾝｸﾞ	1	
13	C-52-11036-83012	*	SHOE & LINING,LH	ｼｭｰ & ﾗｲﾆﾝｸﾞ	1	
14	C-52-11044-23300		SCREW,ADJUST,RH	ｽｸﾘｭ	1	
15	C-52-11044-13300		SCREW,ADJUST,LH	ｽｸﾘｭ	1	
16	C-52-10910-05150		LEVER	ﾚﾊﾞｰ	2	
17	C-52-11036-25160		SPRING,RH	ｽﾌﾟﾘﾝｸﾞ	1	
18	C-52-11036-15160		SPRING,LH	ｽﾌﾟﾘﾝｸﾞ	1	
19	20803-71081		SPRING & CABLE	ｽﾌﾟﾘﾝｸﾞ & ｹｰﾌﾞﾙ	2	
20	C-52-11005-44500		LEVER,PARKING,RH	ﾚﾊﾞｰ	1	
21	C-52-11005-34500		LEVER,PARKING,LH	ﾚﾊﾞｰ	1	
22	C-52-11003-64530		STRUT	ｽﾄﾗｯﾄ	2	
23	C-52-11003-04010		SPRING	ｽﾌﾟﾘﾝｸﾞ	4	
24	C-52-11036-54070		SPRING	ｽﾌﾟﾘﾝｸﾞ	2	
25	C-52-11036-54540		SPRING	ｽﾌﾟﾘﾝｸﾞ	2	
26	C-52-11003-05140		GUIDE,CABLE	ｶﾞｲﾄﾞ	2	
27	C-52-10906-04160		PIN	ﾋﾟﾝ	4	
28	C-52-10927-04130		CUP	ｶｯﾌﾟ	8	
29	C-52-11101-04111		SPRING	ｽﾌﾟﾘﾝｸﾞ	4	
30	C-52-11201-01270		PLATE,SHOE-GUIDE	ﾌﾟﾚｰﾄ	2	
31	C-52-10901-64560		RETAINER	ﾘﾃｰﾅ	2	
32	C-52-10901-64550		WASHER,WAVE	ﾜｯｼｬ	2	
33	C-52-11204-69010		COVER	ｶﾊﾞｰ	4	
34	C-90-0527-0616		BOLT	ﾎﾞﾙﾄ	4	
35	C-90-9200-0800		E-RING	Eﾘﾝｸﾞ	2	
36	C-52-11036-24606		CABLE,RH	ｹｰﾌﾞﾙ	1	
37	C-52-11031-14607		CABLE,LH	ｹｰﾌﾞﾙ	1	
38	214A3-02001		BOLT	ﾎﾞﾙﾄ	8	
39	210F3-72001		BOLT	ﾎﾞﾙﾄ	4	
K1	23453-79801		KIT,REPAIR	ﾘﾍﾟｱｷｯﾄ	2	INC.5-8
K2	C-K2-11036-83022		KIT,SHOE,RH	ｼｭｰｷｯﾄ	1	INC.11,12
K3	C-K2-11036-83012		KIT,SHOE,LH	ｼｭｰｷｯﾄ	1	INC.11,13

FIG.61 STEERING WHEEL UNIT

(F5014110) ステアリング゛ホイールユニット

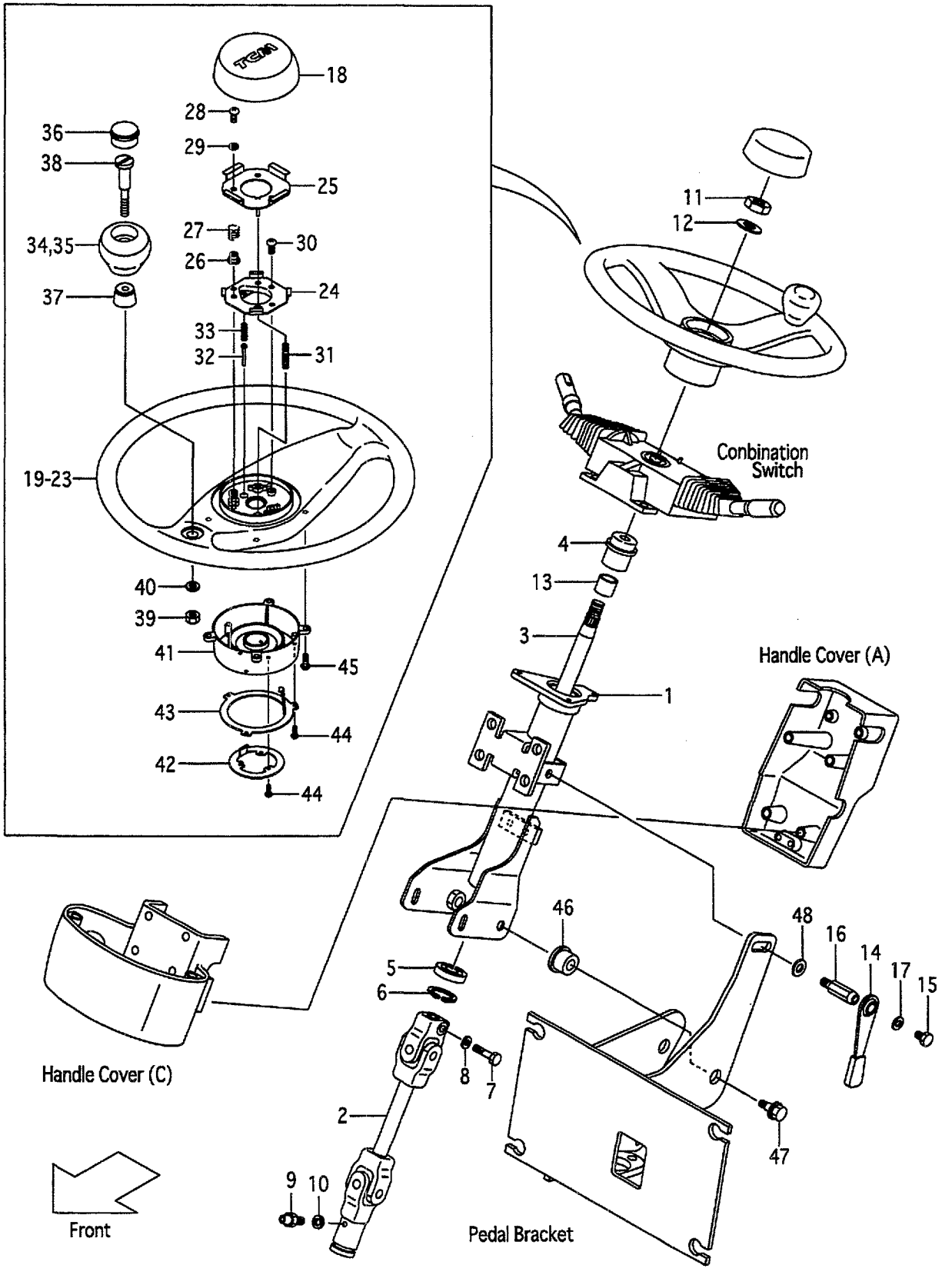

A:FG10C19 FG10T19 FG15C19 FG15T19 FG18C19 FG18T19
B:FD10C19 FD10T19 FD15C19 FD15T19 FD18C19 FD18T19

Item No	Part No.	Mark	Description		Req'd	Remarks : Serial No.
A1	239A4-12102		SHAFT-ASSY,STEERING	ｽﾃｱﾘﾝｸﾞｼｬﾌﾄｱｯｾﾝ	1	INC.1-13
1	239A4-12112		COLUMN	ｺﾗﾑ	1	
2	239A4-12121		JOINT,UNIVERSAL	ｼﾞｮｲﾝﾄ	1	
3	239A4-12131		SHAFT	ｼｬﾌﾄ	1	
4	NO PART NO.		BUSHING,COLUMN	ﾌﾞｯｼﾝｸﾞ	1	
5	NO PART NO.		BRG,BALL	ﾍﾞｱﾘﾝｸﾞ	1	
6	NO PART NO.		RING,SNAP	ｽﾅｯﾌﾟﾘﾝｸﾞ	1	
7	NO PART NO.		BOLT	ﾎﾞﾙﾄ	1	
8	NO PART NO.		WASHER	ﾜｯｼｬ	1	
9	NO PART NO.		FITTING	ﾌｨｯﾃｨﾝｸﾞ	1	
10	NO PART NO.		WASHER	ﾜｯｼｬ	1	
11	01402-00014		NUT	ﾅｯﾄ	1	
12	14354-12271		WASHER	ﾜｯｼｬ	1	
13	NO PART NO.		BUSHING,DU	ﾌﾞｯｼﾝｸﾞ	1	
A2	239A4-12402		LEVER-ASSY,TILT-LOCK	ﾃｨﾙﾄﾛｯｸﾚﾊﾞｰｱｯｾﾝ	1	INC.14-17
14	239A4-12411		LEVER	ﾚﾊﾞｰ	1	
15	239A4-12441		BOLT	ﾎﾞﾙﾄ	1	
16	239A4-12431		BOLT,LOCK	ﾎﾞﾙﾄ	1	
17	214A4-12161		WASHER	ﾜｯｼｬ	1	
A3	209K4-10801		WHEEL-ASSY,STEERING	ｽﾃｱﾘﾝｸﾞﾎｲｰﾙｱｯｾﾝ	1	INC.18-45
18	216G4-12761		PAD,HORN	ﾊﾟｯﾄﾞ	1	
19	209K4-12561		WHEEL,STEERING	ﾎｲｰﾙ	1	
20	216G4-12531		BOSS,HUB	ﾎﾞｽ	1	
21	216G4-12541		ARM	ｱｰﾑ	1	
22	216G4-12551		NUT,WELD	ﾅｯﾄ	1	
23	216G4-12561		RING	ﾘﾝｸﾞ	1	
A4	271F4-12221		SWITCH-ASSY	ｽｲｯﾁｱｯｾﾝ	1	INC.24-29
24	216G4-12581		PLATE,CONTACT,A	ﾌﾟﾚｰﾄ	1	
25	216G4-12591		PLATE,CONTACT,B	ﾌﾟﾚｰﾄ	1	
26	216G4-12601		INSULATOR	ｲﾝｼｭﾚｰﾀ	3	
27	216G4-12611		SPRING,HORN	ｽﾌﾟﾘﾝｸﾞ	3	
28	216G4-12621		SCREW	ｽｸﾘｭ	3	
29	216G4-12631		WASHER,FIVER	ﾜｯｼｬ	3	
30	216G4-12641		SCREW	ｽｸﾘｭ	2	
31	216G4-12661		SPRING,EARTH	ｽﾌﾟﾘﾝｸﾞ	1	
32	271F4-12231		PLUNGER	ﾌﾟﾗﾝｼﾞｬ	1	
33	271F4-12241		SPRING,PLUNGER	ｽﾌﾟﾘﾝｸﾞ	1	
A5	216G4-12681		KNOB-ASSY	ﾉﾌﾞｱｯｾﾝ	1	INC.34-40
34	NO PART NO.	#	KNOB	ﾉﾌﾞ	1	
35	NO PART NO.	#	INSERT,KNOB	ｲﾝｻｰﾄ	1	
36	216G4-12711		CAP	ｷｬｯﾌﾟ	1	
37	NO PART NO.	#	BUSHING	ﾌﾞｯｼﾝｸﾞ	1	
38	NO PART NO.	#	SHAFT	ｼｬﾌﾄ	1	
39	216G4-12741		NUT	ﾅｯﾄ	1	
40	216G4-12751		WASHER	ﾜｯｼｬ	1	
41	209K4-12541		COVER,CANCEL-CAM	ｶﾊﾞｰ	1	
42	209K4-12531		RING,CONTACT,A	ﾘﾝｸﾞ	1	
43	209K4-12521		RING,CONTACT,B	ﾘﾝｸﾞ	1	
44	209K4-12511		SCREW	ｽｸﾘｭ	6	
45	209K4-12501		SCREW	ｽｸﾘｭ	4	

FIG.61 STEERING WHEEL UNIT

(F5014110) ステアリング゛ホイールユニット

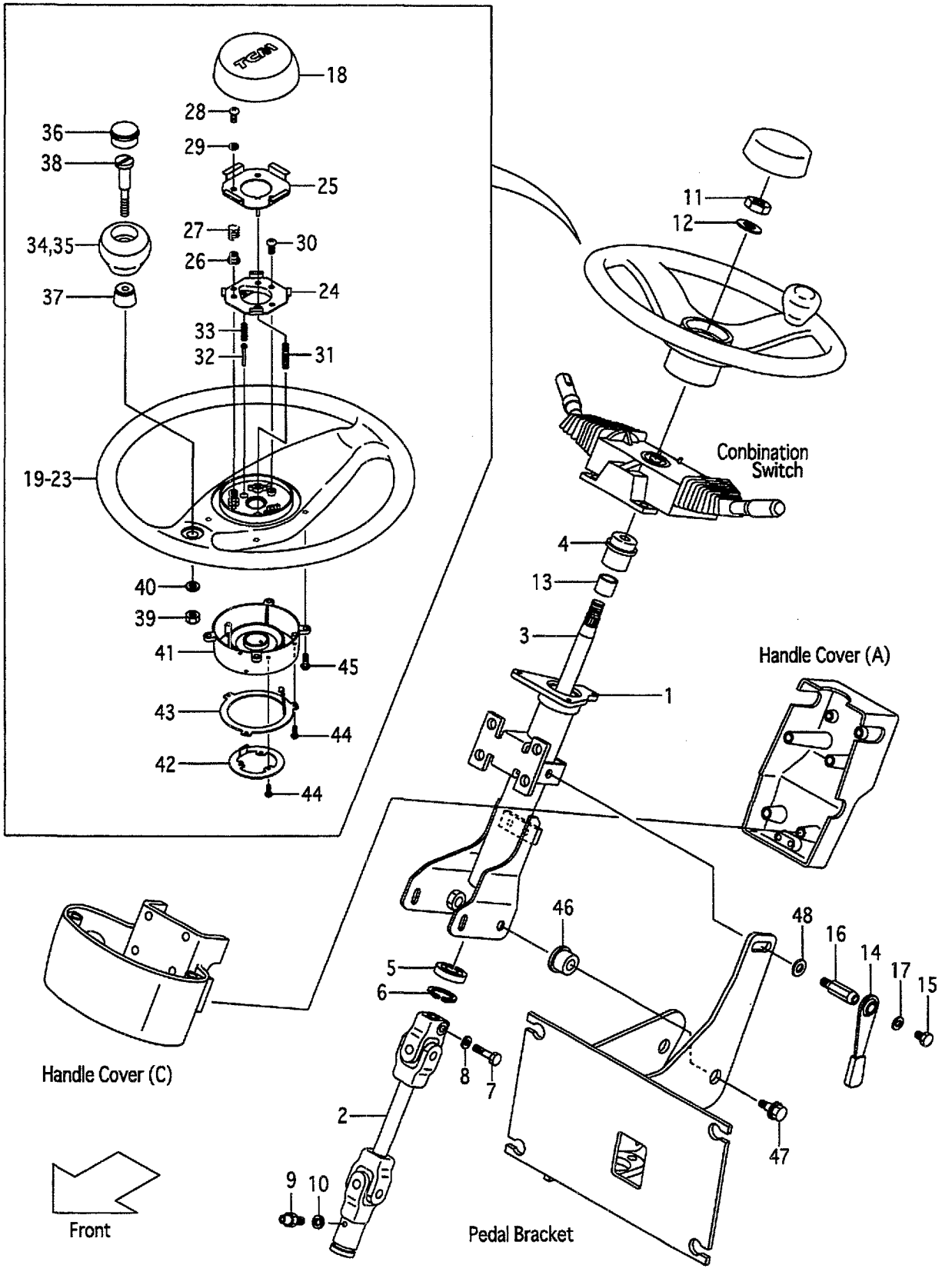

A:FG10C19 FG10T19 FG15C19 FG15T19 FG18C19 FG18T19
B:FD10C19 FD10T19 FD15C19 FD15T19 FD18C19 FD18T19

Item No	Part No.	Mark	Description		Req'd	Remarks : Serial No.
46	216G4-12101		BUSHING	ﾌﾞｯｼﾝｸﾞ	2	
47	216G4-12111		BOLT	ﾎﾞﾙﾄ	2	
48	02000-00012		WASHER	ﾜｯｼｬ	1	

FIG.62 STEERING WHEEL UNIT (T-TYPE):[EXN]

(F5014150) ステアリング ホイールユニット

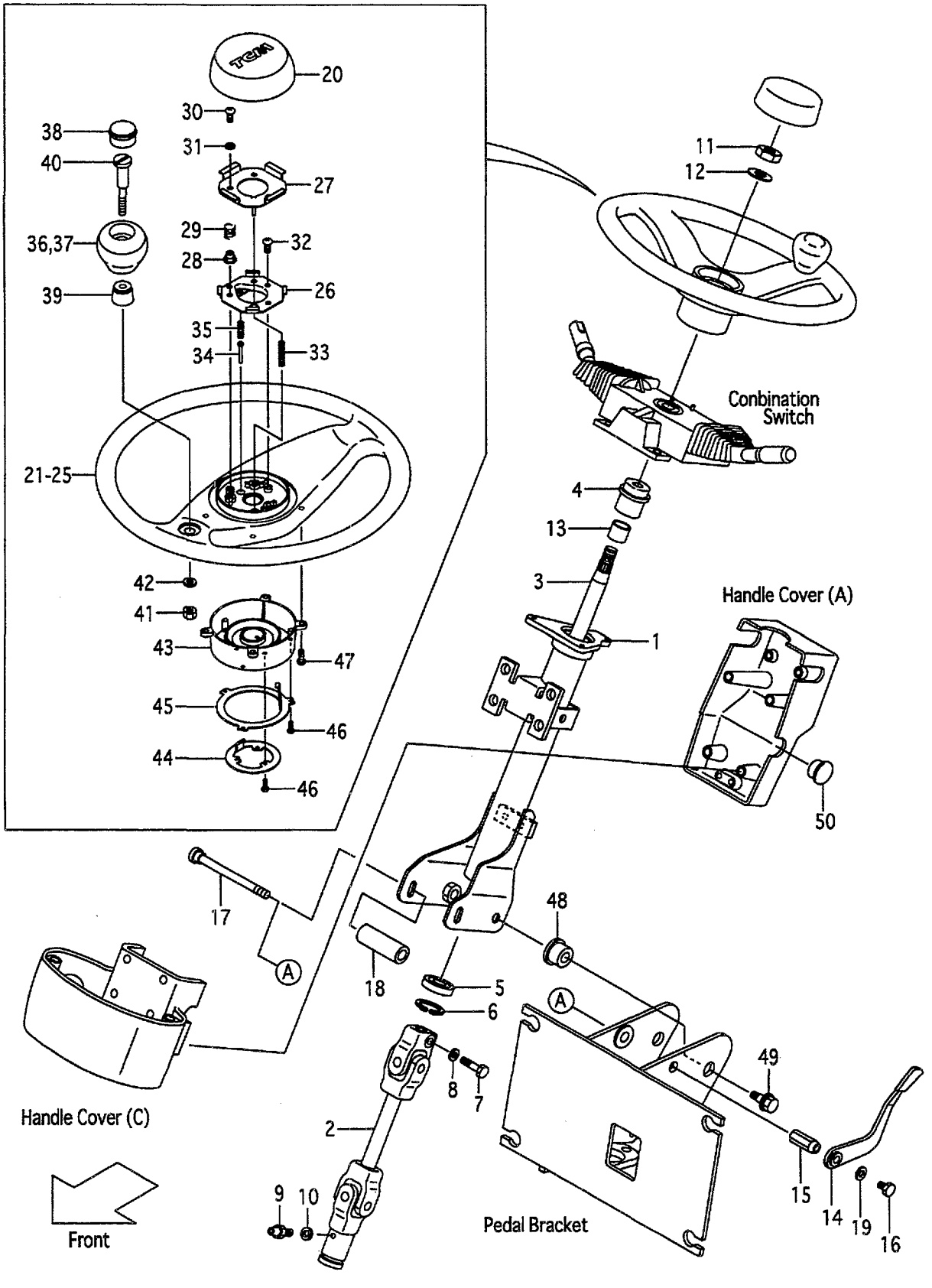

A:FG10T19 FG15T19 FG18T19
B:FD10T19 FD15T19 FD18T19

FIG.62
(F5014150)

Item No	Part No.	Mark	Description		Req'd	Remarks : Serial No.
A1	539A2-60301		SHAFT-ASSY,STEERING	ｽﾃｱﾘﾝｸﾞｼｬﾌﾄｱｯｾﾝ	1	[EXN] INC.1-13
1	539A2-62301		COLUMN	ｺﾗﾑ	1	[EXN]
2	239A4-12121		JOINT,UNIVERSAL	ｼﾞｮｲﾝﾄ	1	[EXN]
3	539A2-62321		SHAFT	ｼｬﾌﾄ	1	[EXN]
4	NO PART NO.		BUSHING,COLUMN	ﾌﾞｯｼﾝｸﾞ	1	[EXN]
5	NO PART NO.		BRG,BALL	ﾍﾞｱﾘﾝｸﾞ	1	[EXN]
6	NO PART NO.		RING,SNAP	ｽﾅｯﾌﾟﾘﾝｸﾞ	1	[EXN]
7	NO PART NO.		BOLT	ﾎﾞﾙﾄ	1	[EXN]
8	NO PART NO.		WASHER	ﾜｯｼｬ	1	[EXN]
9	NO PART NO.		FITTING	ﾌｨｯﾃｨﾝｸﾞ	1	[EXN]
10	NO PART NO.		WASHER	ﾜｯｼｬ	1	[EXN]
11	01402-00014		NUT	ﾅｯﾄ	1	[EXN]
12	14354-12271		WASHER	ﾜｯｼｬ	1	[EXN]
13	NO PART NO.		BUSHING,DU	ﾌﾞｯｼﾝｸﾞ	1	[EXN]
A2	209K4-10601		LEVER-ASSY,TILT-LOCK	ﾃｨﾙﾄﾛｯｸﾚﾊﾞｰｱｯｾﾝ	1	[EXN] INC.14-19
14	216G4-12171		LEVER	ﾚﾊﾞｰ	1	[EXN]
15	209K4-12301		NUT,LOCK	ﾅｯﾄ	1	[EXN]
16	215E4-12231		BOLT	ﾎﾞﾙﾄ	1	[EXN]
17	216G4-12151		BOLT,LOCK	ﾎﾞﾙﾄ	1	[EXN]
18	216G4-12161		COLLAR	ｶﾗｰ	1	[EXN]
19	214A4-12161		WASHER	ﾜｯｼｬ	1	[EXN]
A3	209K4-10801		WHEEL-ASSY,STEERING	ｽﾃｱﾘﾝｸﾞﾎｲｰﾙｱｯｾﾝ	1	[EXN] INC.20-47
20	216G4-12761		PAD,HORN	ﾊﾟｯﾄﾞ	1	[EXN]
21	209K4-12561		WHEEL,STEERING	ﾎｲｰﾙ	1	[EXN]
22	216G4-12531		BOSS,HUB	ﾎﾞｽ	1	[EXN]
23	216G4-12541		ARM	ｱｰﾑ	1	[EXN]
24	216G4-12551		NUT,WELD	ﾅｯﾄ	1	[EXN]
25	216G4-12561		RING	ﾘﾝｸﾞ	1	[EXN]
A4	271F4-12221		SWITCH-ASSY	ｽｲｯﾁｱｯｾﾝ	1	[EXN] INC.26-31
26	216G4-12581		PLATE,CONTACT,A	ﾌﾟﾚｰﾄ	1	[EXN]
27	216G4-12591		PLATE,CONTACT,B	ﾌﾟﾚｰﾄ	1	[EXN]
28	216G4-12601		INSULATOR	ｲﾝｼｭﾚｰﾀ	3	[EXN]
29	216G4-12611		SPRING,HORN	ｽﾌﾟﾘﾝｸﾞ	3	[EXN]
30	216G4-12621		SCREW	ｽｸﾘｭ	3	[EXN]
31	216G4-12631		WASHER,FIVER	ﾜｯｼｬ	3	[EXN]
32	216G4-12641		SCREW	ｽｸﾘｭ	2	[EXN]
33	216G4-12661		SPRING,EARTH	ｽﾌﾟﾘﾝｸﾞ	1	[EXN]
34	271F4-12231		PLUNGER	ﾌﾟﾗﾝｼﾞｬ	1	[EXN]
35	271F4-12241		SPRING,PLUNGER	ｽﾌﾟﾘﾝｸﾞ	1	[EXN]
A5	216G4-12681		KNOB-ASSY	ﾉﾌﾞｱｯｾﾝ	1	[EXN] INC.36-42
36	NO PART NO.	#	KNOB	ﾉﾌﾞ	1	[EXN]
37	NO PART NO.	#	INSERT,KNOB	ｲﾝｻｰﾄ	1	[EXN]
38	216G4-12711		CAP	ｷｬｯﾌﾟ	1	[EXN]
39	NO PART NO.	#	BUSHING	ﾌﾞｯｼﾝｸﾞ	1	[EXN]
40	NO PART NO.	#	SHAFT	ｼｬﾌﾄ	1	[EXN]
41	216G4-12741		NUT	ﾅｯﾄ	1	[EXN]
42	216G4-12751		WASHER	ﾜｯｼｬ	1	[EXN]
43	209K4-12541		COVER,CANCEL-CAM	ｶﾊﾞｰ	1	[EXN]
44	209K4-12531		RING,CONTACT,A	ﾘﾝｸﾞ	1	[EXN]
45	209K4-12521		RING,CONTACT,B	ﾘﾝｸﾞ	1	[EXN]

FIG.62 STEERING WHEEL UNIT (T-TYPE):[EXN]

(F5014150) ステアリング ホイールユニット

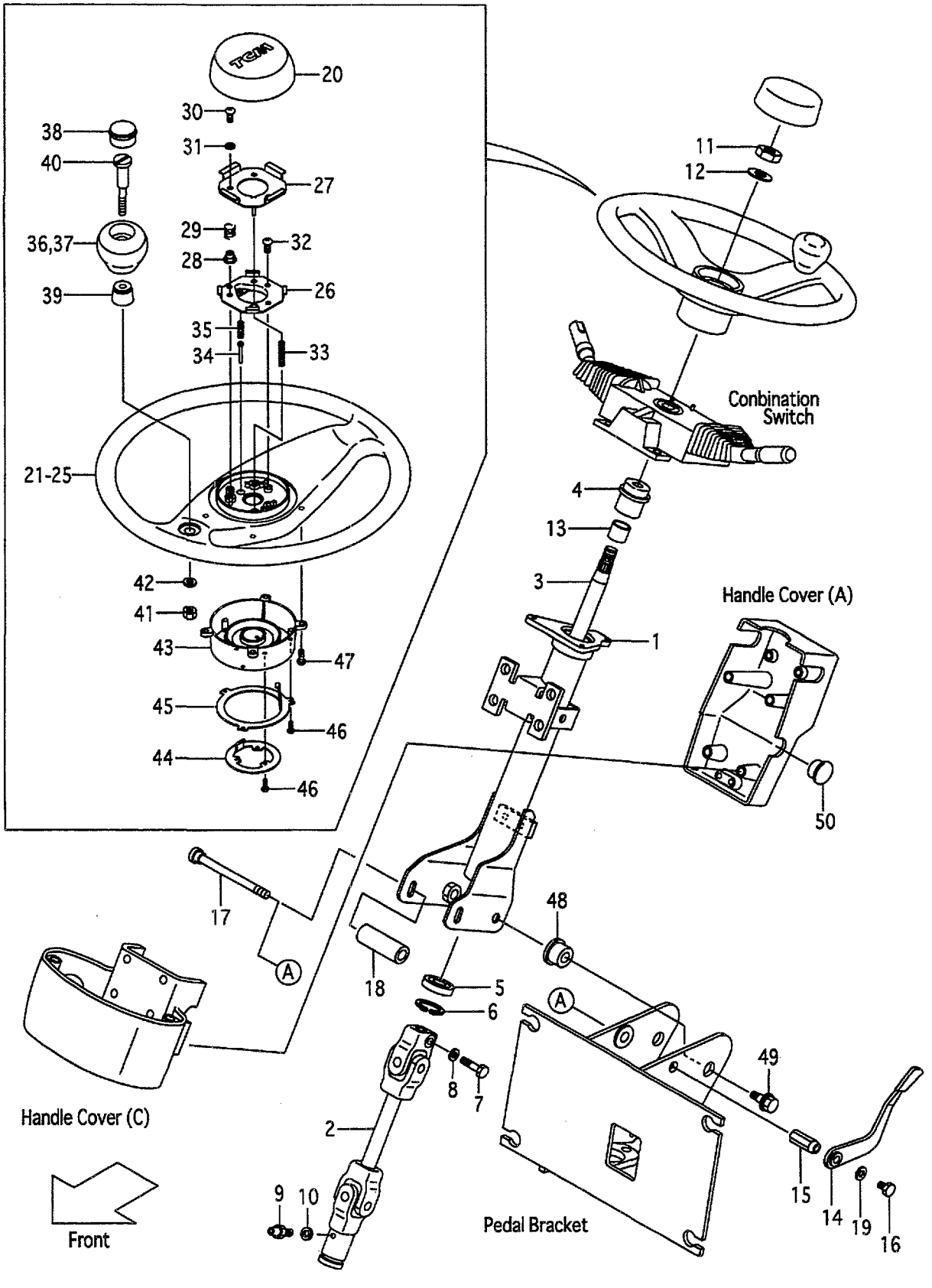

A:FG10T19 FG15T19 FG18T19
B:FD10T19 FD15T19 FD18T19

Item No	Part No.	Mark	Description		Req'd	Remarks : Serial No.
46	209K4-12511		SCREW	ｽｸﾘｭ	6	[EXN]
47	209K4-12501		SCREW	ｽｸﾘｭ	4	[EXN]
48	216G4-12101		BUSHING	ﾌﾞｯｼﾝｸﾞ	2	[EXN]
49	216G4-12111		BOLT	ﾎﾞﾙﾄ	2	[EXN]
50	514A5-12701		PLUG,HOLE	ﾌﾟﾗｸﾞ	1	[EXN]

FIG.63 GEAR BOX

(F5014120) ｷﾞﾔｰﾎﾞｯｸｽ

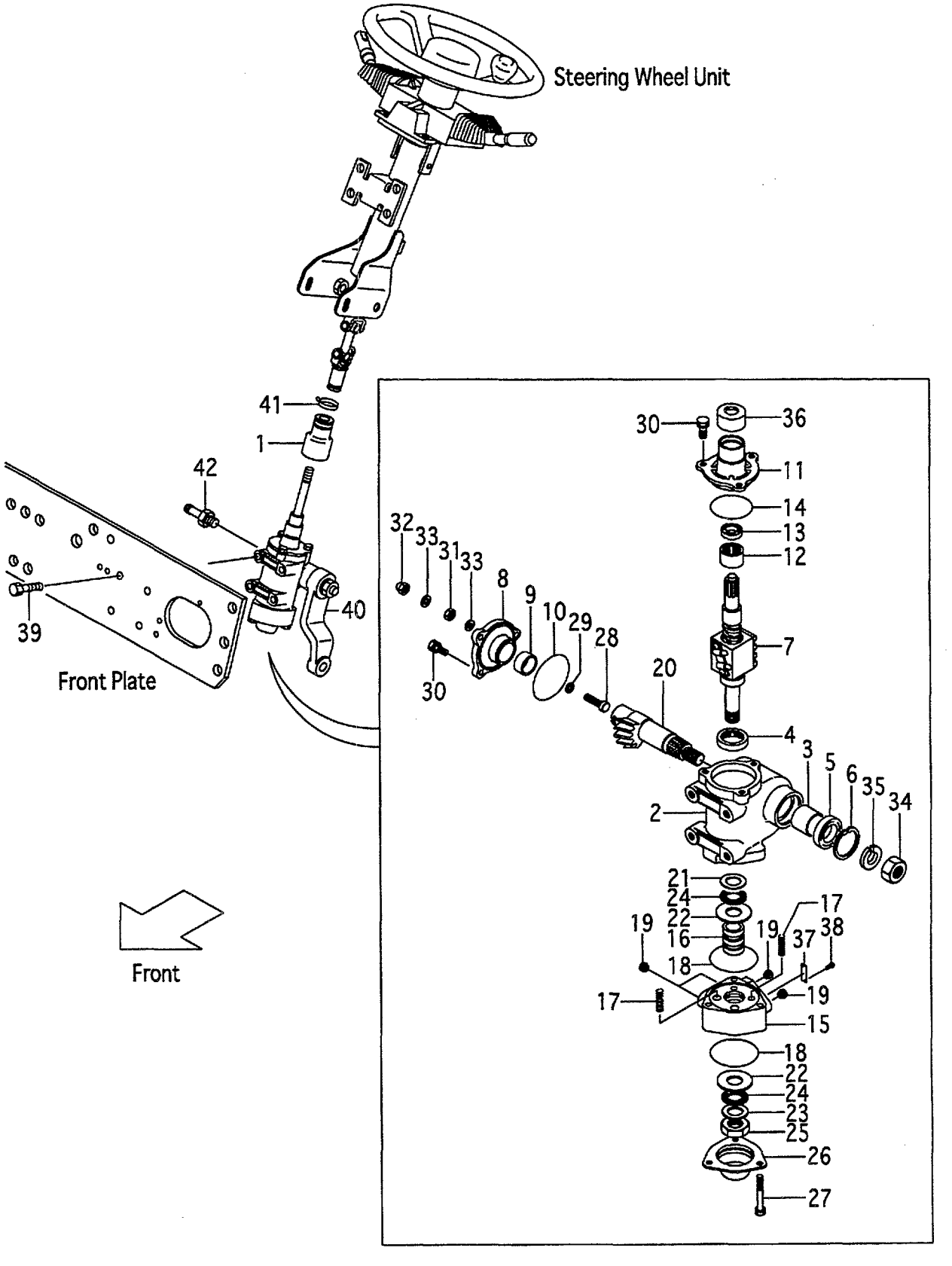

A:FG10C19 FG10T19 FG15C19 FG15T19 FG18C19 FG18T19
B:FD10C19 FD10T19 FD15C19 FD15T19 FD18C19 FD18T19

Item No	Part No.	Mark	Description		Req'd	Remarks : Serial No.
1	239A4-12211		BOOT,GEAR-BOX	ﾌﾞｰﾂ	1	
A1	239A4-12201		BOX-ASSY,GEAR	ｷﾞﾔｰﾎﾞｯｸｽｱｯｾﾝ	1	INC.2-38
A2	B-23643-00526		CASE-ASSY,GEAR	ｷﾞﾔｰｹｰｽｱｯｾﾝ	1	INC.2-6
A3	B-23643-00523		SUB-ASSY,GEAR-CASE	ｷﾞﾔｰｹｰｽｻﾌﾞｱｯｾﾝ	1	INC.2,3
2	NO PART NO.	#	CASE,GEAR	ｹｰｽ	1	
3	B-23641-03716		BUSHING	ﾌﾞｯｼﾝｸﾞ	1	
4	B-23451-02016		BRG,RADIAL	ﾍﾞｱﾘﾝｸﾞ	1	
5	B-23711-01922		SEAL,OIL	ｼｰﾙ	1	
6	B-94721-38151		RING,SNAP	ｽﾅｯﾌﾟﾘﾝｸﾞ	1	
7	B-B3613-13001		SCREW,BALL	ｽｸﾘｭ	1	
A4	B-23642-00911		COVER-ASSY,SIDE	ｶﾊﾞｰｱｯｾﾝ	1	INC.8-10
8	NO PART NO.	#	COVER,SIDE	ｶﾊﾞｰ	1	
9	B-23641-03716		BUSHING	ﾌﾞｯｼﾝｸﾞ	1	
10	B-95121-06000		O-RING	Oﾘﾝｸﾞ	1	
A5	B-23643-00618		COVER-ASSY,TOP	ﾄｯﾌﾟｶﾊﾞｰｱｯｾﾝ	1	INC.11-14
11	NO PART NO.	#	COVER,TOP	ｶﾊﾞｰ	1	
12	NO PART NO.	#	BRG,RADIAL	ﾍﾞｱﾘﾝｸﾞ	1	
13	NO PART NO.	#	SEAL,OIL	ｼｰﾙ	1	
14	B-95121-06000		O-RING	Oﾘﾝｸﾞ	1	
A6	B-23643-00296		HOUSING-ASSY,VALAE	ﾊﾞﾙﾌﾞﾊｳｼﾞﾝｸﾞｱｯｾﾝ	1	INC.15-19
15	NO PART NO.	#	HOUSING,VALVE	ﾊｳｼﾞﾝｸ	1	
16	NO PART NO.	#	SPOOL	ｽﾌﾟｰﾙ	1	
17	14354-12321		SPRING	ｽﾌﾟﾘﾝｸﾞ	4	
18	B-95151-06300		O-RING	Oﾘﾝｸﾞ	2	
19	25594-52141		FERRULE	ﾌｪﾙｰﾙ	4	
20	B-23641-00313		SHAFT,SECTOR	ｼｬﾌﾄ	1	
21	B-23641-01609		RACE,THRUST	ﾚｰｽ	1	
22	B-23641-01610		RACE,THRUST	ﾚｰｽ	2	
23	B-23451-02212		RACE,THRUST	ﾚｰｽ	1	
24	B-23451-02106		BRG,THRUST	ﾍﾞｱﾘﾝｸﾞ	2	
25	B-23641-02227		NUT	ﾅｯﾄ	1	
26	B-23641-02508		COVER,END	ｶﾊﾞｰ	1	
27	B-23641-03314		BOLT	ﾎﾞﾙﾄ	3	
28	14354-12211		SCREW,ADJUST	ｽｸﾘｭ	1	
29	14354-12221		SHIM,ADJUST-SCREW	ｼﾑ	1	
30	B-23711-03701		BOLT	ﾎﾞﾙﾄ	6	
31	01402-10010		NUT	ﾅｯﾄ	1	
32	14354-12261		NUT,CAP	ﾅｯﾄ	1	
33	14354-12251		PACKING	ﾊﾟｯｷﾝｸﾞ	2	
34	B-23641-02218		NUT	ﾅｯﾄ	1	
35	B-94101-20512		WASHER	ﾜｯｼｬ	1	
36	B-23641-04303		COVER,DUST	ｶﾊﾞｰ	1	
37	NO PART NO.	#	PLATE,NAME	ﾌﾟﾚｰﾄ	1	
38	NO PART NO.	#	SCREW,DRIVE	ｽｸﾘｭ	2	
39	01184-12030		BOLT	ﾎﾞﾙﾄ	4	
40	239A4-22001		ARM,PITMAN	ｱｰﾑ	1	
41	04913-11200		BAND	ﾊﾞﾝﾄﾞ	1	
42	25597-62211		NIPPLE	ﾆｯﾌﾟﾙ	1	

FIG.64 GEAR BOX [(EXC,EXE,EXN)/PSS]

(F5014140) ｷﾞﾔｰﾎﾞｯｸｽ

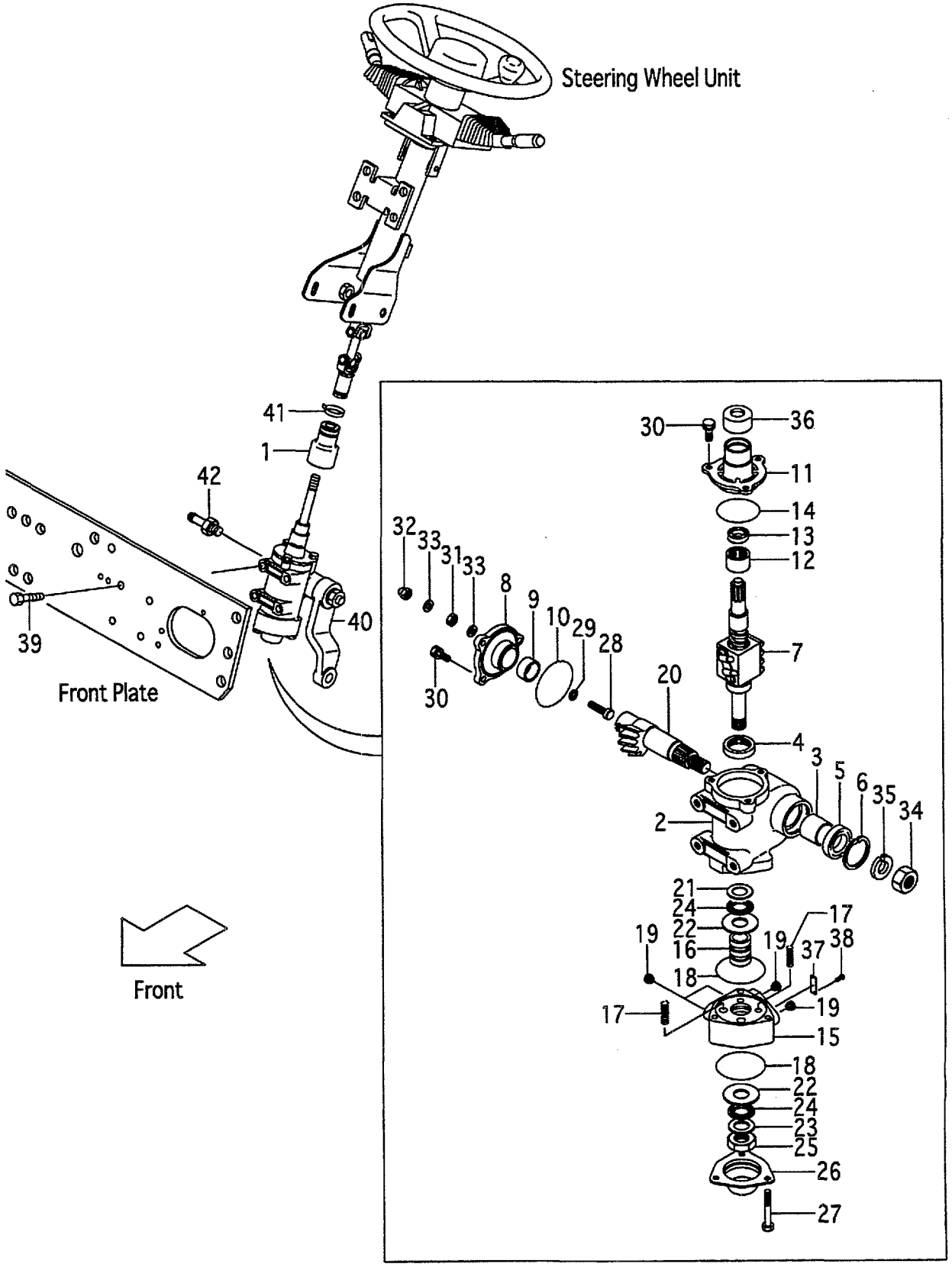

A:FG10C19 FG10T19 FG15C19 FG15T19 FG18C19 FG18T19
B:FD10C19 FD10T19 FD15C19 FD15T19 FD18C19 FD18T19

Item No	Part No.	Mark	Description		Req'd	Remarks : Serial No.
1	239A4-12211		BOOT,GEAR-BOX	ﾌﾞｰﾂ	1	[EXC/PSS][EXE/PSS][EXN/PSS]
A1	239A4-12201		BOX-ASSY,GEAR	ｷﾞﾔｰﾎﾞｯｸｽｱｯｾﾝ	1	[EXC/PSS][EXE/PSS][EXN/PSS]
						INC.2-38
A2	B-23643-00526		CASE-ASSY,GEAR	ｷﾞﾔｰｹｰｽｱｯｾﾝ	1	[EXC/PSS][EXE/PSS][EXN/PSS]
						INC.2-6
A3	B-23643-00523		SUB-ASSY,GEAR-CASE	ｷﾞﾔｰｹｰｽｻﾌﾞｱｯｾﾝ	1	[EXC/PSS][EXE/PSS][EXN/PSS]
						INC.2,3
2	NO PART NO.	#	CASE,GEAR	ｹｰｽ	1	[EXC/PSS][EXE/PSS][EXN/PSS]
3	B-23641-03716		BUSHING	ﾌﾞｯｼﾝｸﾞ	1	[EXC/PSS][EXE/PSS][EXN/PSS]
4	B-23451-02016		BRG,RADIAL	ﾍﾞｱﾘﾝｸﾞ	1	[EXC/PSS][EXE/PSS][EXN/PSS]
5	B-23711-01922		SEAL,OIL	ｼｰﾙ	1	[EXC/PSS][EXE/PSS][EXN/PSS]
6	B-94721-38151		RING,SNAP	ｽﾅｯﾌﾟﾘﾝｸﾞ	1	[EXC/PSS][EXE/PSS][EXN/PSS]
7	B-B3613-13001		SCREW,BALL	ｽｸﾘｭ	1	[EXC/PSS][EXE/PSS][EXN/PSS]
A4	B-23642-00911		COVER-ASSY,SIDE	ｶﾊﾞｰｱｯｾﾝ	1	[EXC/PSS][EXE/PSS][EXN/PSS]
						INC.8-10
8	NO PART NO.	#	COVER,SIDE	ｶﾊﾞｰ	1	[EXC/PSS][EXE/PSS][EXN/PSS]
9	B-23641-03716		BUSHING	ﾌﾞｯｼﾝｸﾞ	1	[EXC/PSS][EXE/PSS][EXN/PSS]
10	B-95121-06000		O-RING	Oﾘﾝｸﾞ	1	[EXC/PSS][EXE/PSS][EXN/PSS]
A5	B-23643-00618		COVER-ASSY,TOP	ﾄｯﾌﾟｶﾊﾞｰｱｯｾﾝ	1	[EXC/PSS][EXE/PSS][EXN/PSS]
						INC.11-14
11	NO PART NO.	#	COVER,TOP	ｶﾊﾞｰ	1	[EXC/PSS][EXE/PSS][EXN/PSS]
12	NO PART NO.	#	BRG,RADIAL	ﾍﾞｱﾘﾝｸﾞ	1	[EXC/PSS][EXE/PSS][EXN/PSS]
13	NO PART NO.	#	SEAL,OIL	ｼｰﾙ	1	[EXC/PSS][EXE/PSS][EXN/PSS]
14	B-95121-06000		O-RING	Oﾘﾝｸﾞ	1	[EXC/PSS][EXE/PSS][EXN/PSS]
A6	B-23643-00296		HOUSING-ASSY,VALAE	ﾊﾞﾙﾌﾞﾊｳｼﾞﾝｸﾞｱｯｾﾝ	1	[EXC/PSS][EXE/PSS][EXN/PSS]
						INC.15-19
15	NO PART NO.	#	HOUSING,VALVE	ﾊｳｼﾞﾝｸ	1	[EXC/PSS][EXE/PSS][EXN/PSS]
16	NO PART NO.	#	SPOOL	ｽﾌﾟｰﾙ	1	[EXC/PSS][EXE/PSS][EXN/PSS]
17	14354-12321		SPRING	ｽﾌﾟﾘﾝｸﾞ	4	[EXC/PSS][EXE/PSS][EXN/PSS]
18	B-95151-06300		O-RING	Oﾘﾝｸﾞ	2	[EXC/PSS][EXE/PSS][EXN/PSS]
19	25594-52141		FERRULE	ﾌｪﾙｰﾙ	4	[EXC/PSS][EXE/PSS][EXN/PSS]
20	B-23641-00313		SHAFT,SECTOR	ｼｬﾌﾄ	1	[EXC/PSS][EXE/PSS][EXN/PSS]
21	B-23641-01609		RACE,THRUST	ﾚｰｽ	1	[EXC/PSS][EXE/PSS][EXN/PSS]
22	B-23641-01610		RACE,THRUST	ﾚｰｽ	2	[EXC/PSS][EXE/PSS][EXN/PSS]
23	B-23451-02212		RACE,THRUST	ﾚｰｽ	1	[EXC/PSS][EXE/PSS][EXN/PSS]
24	B-23451-02106		BRG,THRUST	ﾍﾞｱﾘﾝｸﾞ	2	[EXC/PSS][EXE/PSS][EXN/PSS]
25	B-23641-02227		NUT	ﾅｯﾄ	1	[EXC/PSS][EXE/PSS][EXN/PSS]
26	B-23641-02508		COVER,END	ｶﾊﾞｰ	1	[EXC/PSS][EXE/PSS][EXN/PSS]
27	B-23641-03314		BOLT	ﾎﾞﾙﾄ	3	[EXC/PSS][EXE/PSS][EXN/PSS]
28	14354-12211		SCREW,ADJUST	ｽｸﾘｭ	1	[EXC/PSS][EXE/PSS][EXN/PSS]
29	14354-12221		SHIM,ADJUST-SCREW	ｼﾑ	1	[EXC/PSS][EXE/PSS][EXN/PSS]
30	B-23711-03701		BOLT	ﾎﾞﾙﾄ	6	[EXC/PSS][EXE/PSS][EXN/PSS]
31	01402-10010		NUT	ﾅｯﾄ	1	[EXC/PSS][EXE/PSS][EXN/PSS]
32	14354-12261		NUT,CAP	ﾅｯﾄ	1	[EXC/PSS][EXE/PSS][EXN/PSS]
33	14354-12251		PACKING	ﾊﾟｯｷﾝｸﾞ	2	[EXC/PSS][EXE/PSS][EXN/PSS]
34	B-23641-02218		NUT	ﾅｯﾄ	1	[EXC/PSS][EXE/PSS][EXN/PSS]
35	B-94101-20512		WASHER	ﾜｯｼｬ	1	[EXC/PSS][EXE/PSS][EXN/PSS]
36	B-23641-04303		COVER,DUST	ｶﾊﾞｰ	1	[EXC/PSS][EXE/PSS][EXN/PSS]
37	NO PART NO.	#	PLATE,NAME	ﾌﾟﾚｰﾄ	1	[EXC/PSS][EXE/PSS][EXN/PSS]
38	NO PART NO.	#	SCREW,DRIVE	ｽｸﾘｭ	2	[EXC/PSS][EXE/PSS][EXN/PSS]

FIG.64 GEAR BOX [(EXC,EXE,EXN)/PSS]

(F5014140) ｷﾞﾔｰﾎﾞｯｸｽ

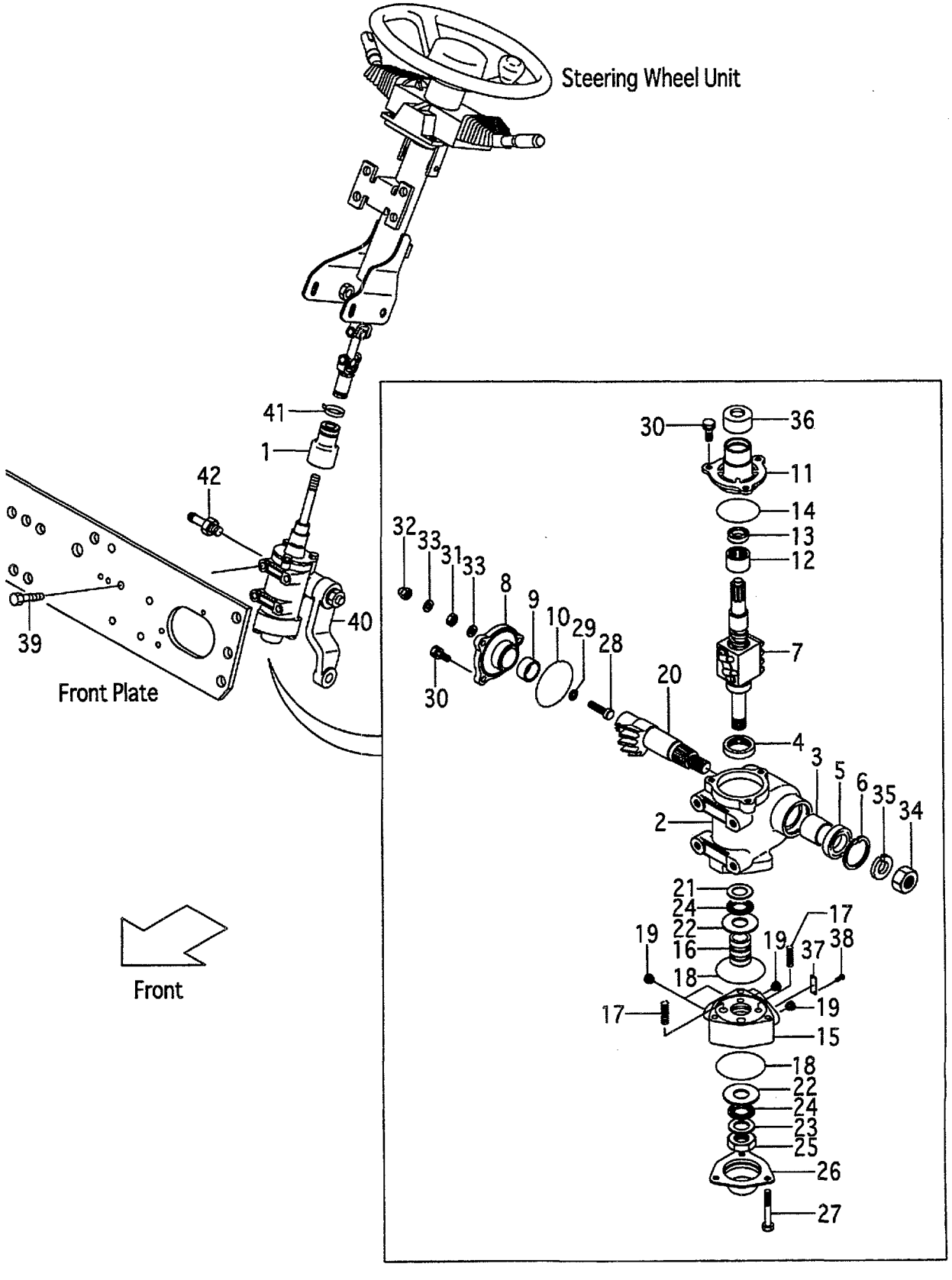

A:FG10C19 FG10T19 FG15C19 FG15T19 FG18C19 FG18T19
B:FD10C19 FD10T19 FD15C19 FD15T19 FD18C19 FD18T19

Item No	Part No.	Mark	Description		Req'd	Remarks : Serial No.
39	01184-12030		BOLT	ﾎﾞﾙﾄ	4	[EXC/PSS][EXE/PSS][EXN/PSS]
40	239A4-22001		ARM,PITMAN	ｱｰﾑ	1	[EXC/PSS][EXE/PSS][EXN/PSS]
41	04913-11200		BAND	ﾊﾞﾝﾄﾞ	1	[EXC/PSS][EXE/PSS][EXN/PSS]
42	25597-62211		NIPPLE	ﾆｯﾌﾟﾙ	1	[EXC/PSS][EXE/PSS][EXN/PSS]

FIG.65 ORBITROL [EXC][EXE][EXN][OBT][PSO]

(F5014130) オービットロール

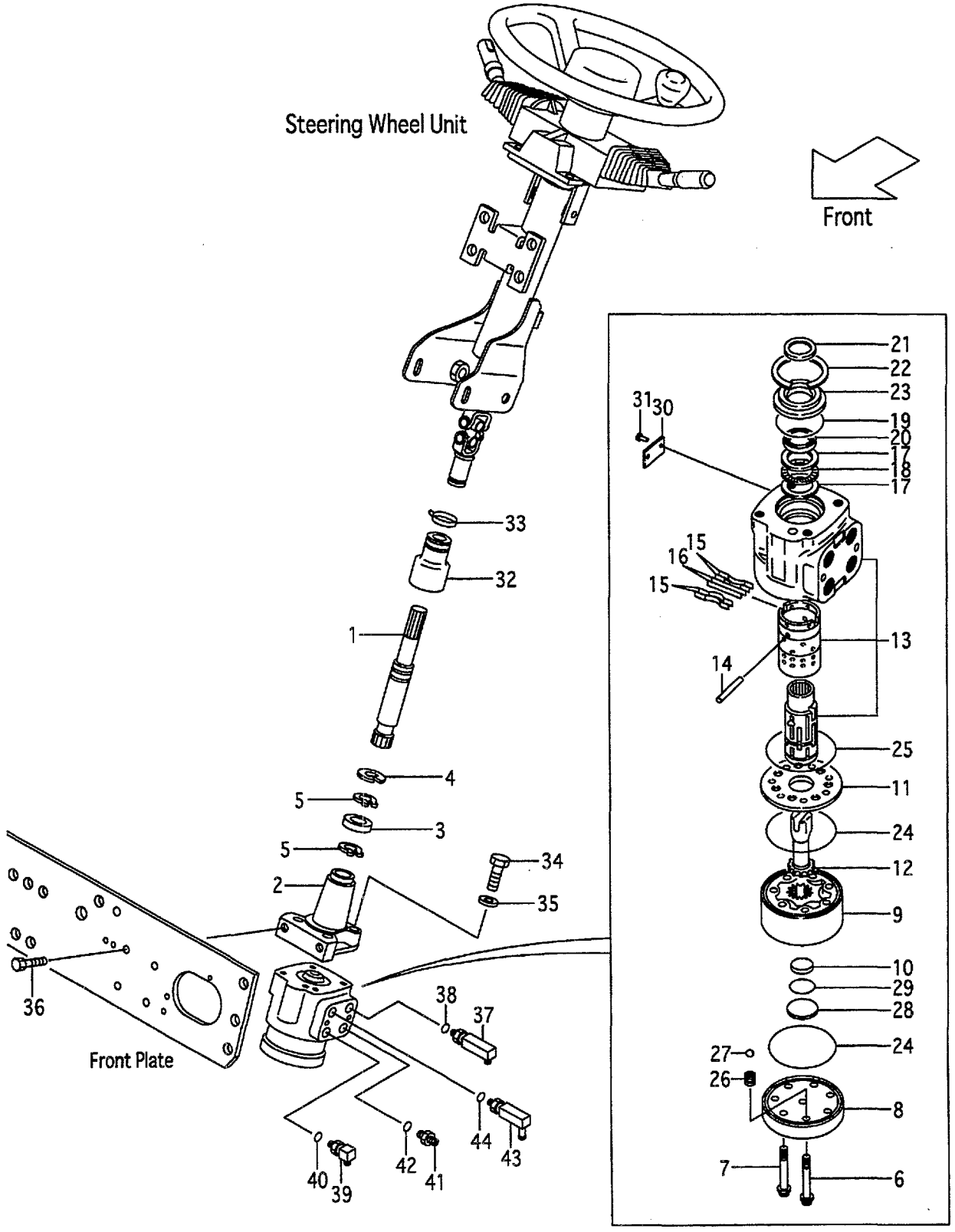

A:FG10C19 FG10T19 FG15C19 FG15T19 FG18C19 FG18T19
B:FD10C19 FD10T19 FD15C19 FD15T19 FD18C19 FD18T19

Item No	Part No.	Mark	Description		Req'd	Remarks : Serial No.
1	539A2-42001		SHAFT,HANDLE	ｼｬﾌﾄ	1	[EXC][EXE][EXN][OBT][PSO] [EXB/OBT][EXB/PSO]
2	539A2-42011		FLANGE	ﾌﾗﾝｼﾞ	1	[EXC][EXE][EXN][OBT][PSO] [EXB/OBT][EXB/PSO]
3	03010-06904		BRG,BALL	ﾍﾞｱﾘﾝｸﾞ	1	[EXC][EXE][EXN][OBT][PSO] [EXB/OBT][EXB/PSO]
4	02110-00037		RING,SNAP	ｽﾅｯﾌﾟﾘﾝｸﾞ	1	[EXC][EXE][EXN][OBT][PSO] [EXB/OBT][EXB/PSO]
5	02100-00020		RING,SNAP	ｽﾅｯﾌﾟﾘﾝｸﾞ	2	[EXC][EXE][EXN][OBT][PSO] [EXB/OBT][EXB/PSO]
A1	15604-10202		UNIT,ORBITROL	ｵｰﾋﾞｯﾄﾛｰﾙﾕﾆｯﾄ	1	[EXC][EXE][EXN][OBT][PSO] [EXB/OBT][EXB/PSO] INC.6-31
6	26094-17151		SCREW	ｽｸﾘｭ	6	[EXC][EXE][EXN][OBT][PSO] [EXB/OBT][EXB/PSO]
7	NO PART NO.		SCREW,RETAINER	ｽｸﾘｭ	1	[EXC][EXE][EXN][OBT][PSO] [EXB/OBT][EXB/PSO]
8	26094-17141		CAP,END	ｷｬｯﾌﾟ	1	[EXC][EXE][EXN][OBT][PSO] [EXB/OBT][EXB/PSO]
9	26094-17121		GEROTOR	ｼﾞﾛｰﾀ	1	[EXC][EXE][EXN][OBT][PSO] [EXB/OBT][EXB/PSO]
10	514A2-42601		SPACER	ｽﾍﾟｰｻ	1	[EXC][EXE][EXN][OBT][PSO] [EXB/OBT][EXB/PSO]
11	26094-17101		PLATE,SPACER	ﾌﾟﾚｰﾄ	1	[EXC][EXE][EXN][OBT][PSO] [EXB/OBT][EXB/PSO]
12	26094-17111		DRIVE	ﾄﾞﾗｲﾌﾞ	1	[EXC][EXE][EXN][OBT][PSO] [EXB/OBT][EXB/PSO]
13	516G2-42401		PARTS,CONTROL	ﾊﾟｰﾂ	1	[EXC][EXE][EXN][OBT][PSO] [EXB/OBT][EXB/PSO]
14	26094-17091		PIN	ﾋﾟﾝ	1	[EXC][EXE][EXN][OBT][PSO] [EXB/OBT][EXB/PSO]
15	26094-17081		SPRING,CENTERING	ｽﾌﾟﾘﾝｸﾞ	4	[EXC][EXE][EXN][OBT][PSO] [EXB/OBT][EXB/PSO]
16	26314-17021		SPRING,FLAT	ｽﾌﾟﾘﾝｸﾞ	2	[EXC][EXE][EXN][OBT][PSO] [EXB/OBT][EXB/PSO]
17	NO PART NO.	*	RACE,BRG	ﾚｰｽ	2	[EXC][EXE][EXN][OBT][PSO] [EXB/OBT][EXB/PSO]
18	NO PART NO.	*	BRG,THRUST,NEEDLE	ﾍﾞｱﾘﾝｸﾞ	1	[EXC][EXE][EXN][OBT][PSO] [EXB/OBT][EXB/PSO]
19	NO PART NO.	#*	O-RING	Oﾘﾝｸﾞ	1	[EXC][EXE][EXN][OBT][PSO] [EXB/OBT][EXB/PSO]
20	529F2-42611	#*	SEAL,OIL	ｼｰﾙ	1	[EXC][EXE][EXN][OBT][PSO] [EXB/OBT][EXB/PSO]
21	NO PART NO.	#*	SEAL,DUST	ｼｰﾙ	1	[EXC][EXE][EXN][OBT][PSO] [EXB/OBT][EXB/PSO]
22	26094-17001		RING,RETAINING	ﾘﾝｸﾞ	1	[EXC][EXE][EXN][OBT][PSO] [EXB/OBT][EXB/PSO]
23	26314-17001		BUSHING,SEAL-GROUND	ﾌﾞｯｼﾝｸﾞ	1	[EXC][EXE][EXN][OBT][PSO] [EXB/OBT][EXB/PSO]
24	NO PART NO.	#*	O-RING	Oﾘﾝｸﾞ	2	[EXC][EXE][EXN][OBT][PSO] [EXB/OBT][EXB/PSO]

FIG.65 ORBITROL [EXC][EXE][EXN][OBT][PSO]

(F5014130) オービットロール

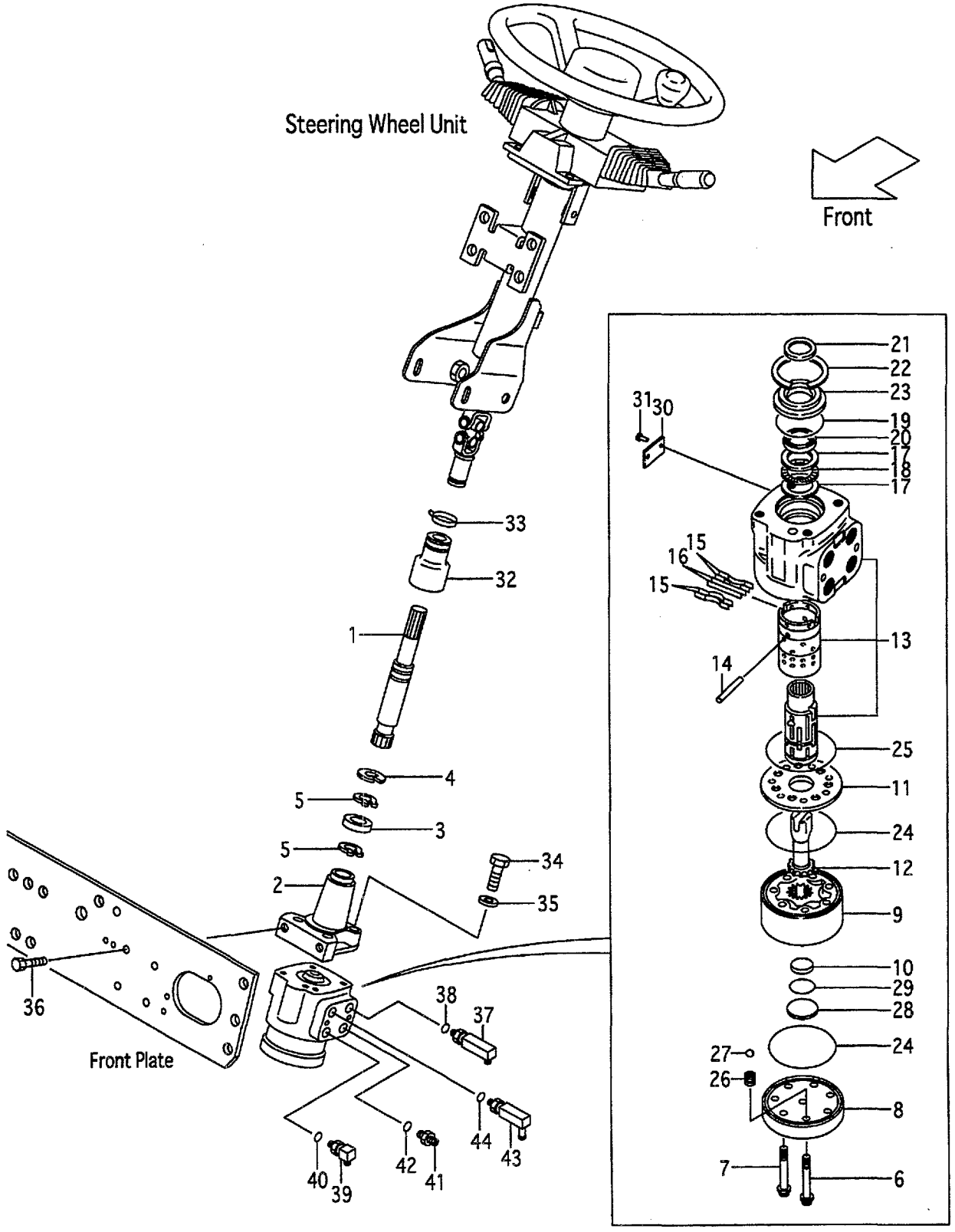

A:FG10C19 FG10T19 FG15C19 FG15T19 FG18C19 FG18T19
B:FD10C19 FD10T19 FD15C19 FD15T19 FD18C19 FD18T19

Item No	Part No.	Mark	Description		Req'd	Remarks : Serial No.
25	NO PART NO.	#*	O-RING	Oﾘﾝｸﾞ	1	[EXC][EXE][EXN][OBT][PSO] [EXB/OBT][EXB/PSO]
26	NO PART NO.		SCREW,ADAPTER	ｽｸﾘｭ	1	[EXC][EXE][EXN][OBT][PSO] [EXB/OBT][EXB/PSO]
27	524W2-42651		BALL	ﾎﾞｰﾙ	1	[EXC][EXE][EXN][OBT][PSO] [EXB/OBT][EXB/PSO]
28	514A2-42611		PLUG	ﾌﾟﾗｸﾞ	1	[EXC][EXE][EXN][OBT][PSO] [EXB/OBT][EXB/PSO]
29	514A2-42621	#*	O-RING	Oﾘﾝｸﾞ	1	[EXC][EXE][EXN][OBT][PSO] [EXB/OBT][EXB/PSO]
30	NO PART NO.	#	PLATE,NAME	ﾌﾟﾚｰﾄ	1	[EXC][EXE][EXN][OBT][PSO] [EXB/OBT][EXB/PSO]
31	NO PART NO.	#	RIVET	ﾘﾍﾞｯﾄ	2	[EXC][EXE][EXN][OBT][PSO] [EXB/OBT][EXB/PSO]
32	239A4-12211		BOOT,GEAR-BOX	ﾌﾞｰﾂ	1	[EXC][EXE][EXN][OBT][PSO] [EXB/OBT][EXB/PSO]
33	04913-11200		BAND	ﾊﾞﾝﾄﾞ	1	[EXC][EXE][EXN][OBT][PSO] [EXB/OBT][EXB/PSO]
34	80110-00628		BOLT	ﾎﾞﾙﾄ	4	[EXC][EXE][EXN][OBT][PSO] [EXB/OBT][EXB/PSO]
35	80430-00006		WASHER	ﾜｯｼｬ	4	[EXC][EXE][EXN][OBT][PSO] [EXB/OBT][EXB/PSO]
36	216G4-12251		BOLT	ﾎﾞﾙﾄ	2	[EXC][EXE][EXN][OBT][PSO] [EXB/OBT][EXB/PSO]
A2	23457-60301		ELBOW-ASSY	ｴﾙﾎﾞｱｯｾﾝ	1	[EXC][EXE][EXN][OBT][PSO] [EXB/OBT][EXB/PSO] INC.37,38
37	NO PART NO.	#	ELBOW	ｴﾙﾎﾞ	1	[EXC][EXE][EXN][OBT][PSO] [EXB/OBT][EXB/PSO]
38	89140-00006		O-RING	Oﾘﾝｸﾞ	1	[EXC][EXE][EXN][OBT][PSO] [EXB/OBT][EXB/PSO]
A3	23457-60311		ELBOW-ASSY	ｴﾙﾎﾞｱｯｾﾝ	1	[EXC][EXE][EXN][OBT][PSO] [EXB/OBT][EXB/PSO] INC.39,40
39	NO PART NO.	#	ELBOW	ｴﾙﾎﾞ	1	[EXC][EXE][EXN][OBT][PSO] [EXB/OBT][EXB/PSO]
40	89140-00006		O-RING	Oﾘﾝｸﾞ	1	[EXC][EXE][EXN][OBT][PSO] [EXB/OBT][EXB/PSO]
A4	22197-60231		NIPPLE-ASSY	ﾆｯﾌﾟﾙｱｯｾﾝ	1	[EXC][EXE][EXN][OBT][PSO] [EXB/OBT][EXB/PSO] INC.41,42
41	NO PART NO.	#	NIPPLE	ﾆｯﾌﾟﾙ	1	[EXC][EXE][EXN][OBT][PSO] [EXB/OBT][EXB/PSO]
42	89140-00006		O-RING	Oﾘﾝｸﾞ	1	[EXC][EXE][EXN][OBT][PSO] [EXB/OBT][EXB/PSO]
A5	516G2-40451		ELBOW-ASSY	ｴﾙﾎﾞｱｯｾﾝ	1	[EXC][EXE][EXN][OBT][PSO] [EXB/OBT][EXB/PSO] INC.43,44
43	NO PART NO.	#	ELBOW	ｴﾙﾎﾞ	1	[EXC][EXE][EXN][OBT][PSO] [EXB/OBT][EXB/PSO]
44	89140-00006		O-RING	Oﾘﾝｸﾞ	1	[EXC][EXE][EXN][OBT][PSO] [EXB/OBT][EXB/PSO]
K1	26094-17021		KIT,BRG,NEEDLE	ﾆｰﾄﾞﾙﾍﾞｱﾘﾝｸﾞｷｯﾄ	1	[EXC][EXE][EXN][OBT][PSO] INC.17,18

FIG.65 ORBITROL [EXC][EXE][EXN][OBT][PSO]

(F5014130) オービットロール

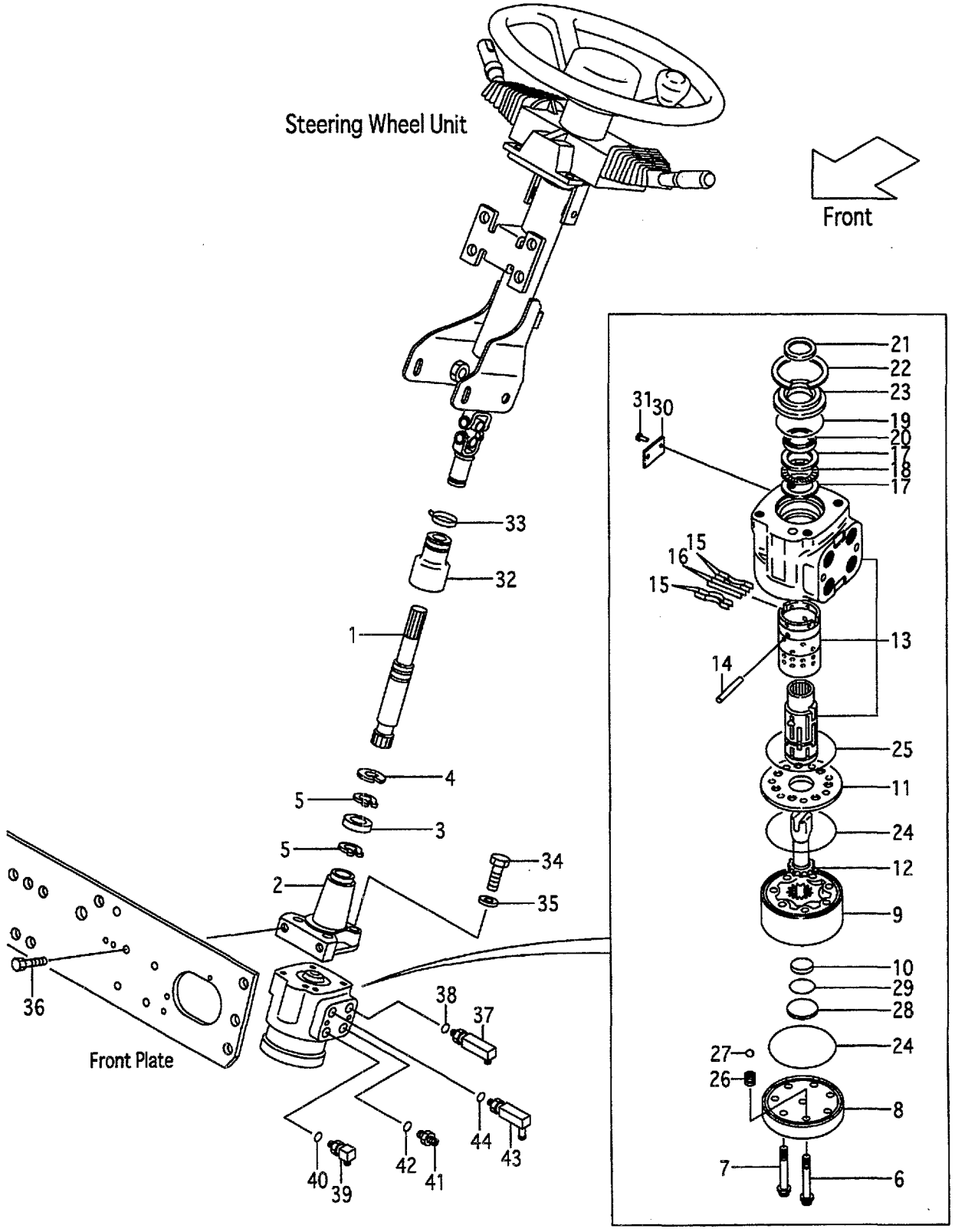

A:FG10C19 FG10T19 FG15C19 FG15T19 FG18C19 FG18T19
B:FD10C19 FD10T19 FD15C19 FD15T19 FD18C19 FD18T19

Item No	Part No.	Mark	Description		Req'd	Remarks : Serial No.
-	26094-17021		KIT,BRG,NEEDLE	ﾆｰﾄﾞﾙﾍﾞｱﾘﾝｸﾞｷｯﾄ	1	[EXB/OBT][EXB/PSO] INC.17,18
K2	516G2-42411		KIT,SEAL	ｼｰﾙｷｯﾄ	1	[EXC][EXE][EXN][OBT][PSO] INC.19-21,24,25,29
-	516G2-42411		KIT,SEAL	ｼｰﾙｷｯﾄ	1	[EXB/OBT][EXB/PSO] INC.19-21,24,25,29

FIG.66 DRAG LINK
(F5014210) ﾄﾞﾗｯｸﾞﾘﾝｸ

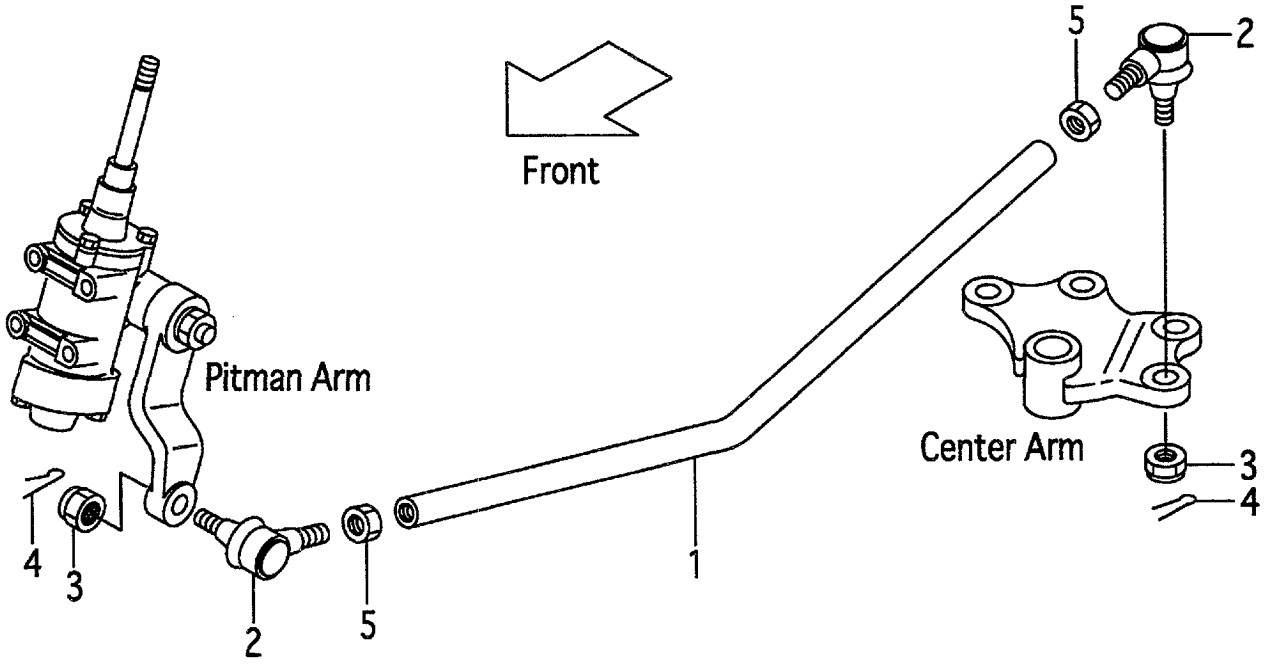

A:FG10C19 FG10T19 FG15C19 FG15T19 FG18C19 FG18T19
B:FD10C19 FD10T19 FD15C19 FD15T19 FD18C19 FD18T19

Item No	Part No.	Mark	Description		Req'd	Remarks : Serial No.
1	218G4-22001		LINK,DRAG	ﾘﾝｸ	1	(WITHOUT EXC,EXE,EXN,OBT, PSO,EXB/OBT,EXB/PSO)
-	218G4-22001		LINK,DRAG	ﾘﾝｸ	1	[EXC/PSS][EXE/PSS][EXN/PSS]
A1	24234-30551		END-ASSY,ROD,RH	ｴﾝﾄﾞｱｯｾﾝ	2	(WITHOUT EXC&E&N,OBT,PSO, EXB/OBT&PSO) INC.2-4
-	24234-30551		END-ASSY,ROD,RH	ｴﾝﾄﾞｱｯｾﾝ	2	[EXC/PSS][EXE/PSS][EXN/PSS] INC.2-4
2	NO PART NO.	#	END,ROD,RH	ｴﾝﾄﾞ	2	(WITHOUT EXC,EXE,EXN,OBT, PSO,EXB/OBT,EXB/PSO)
-	NO PART NO.	#	END,ROD,RH	ｴﾝﾄﾞ	2	[EXC/PSS][EXE/PSS][EXN/PSS]
3	01412-10016		NUT	ﾅｯﾄ	2	(WITHOUT EXC,EXE,EXN,OBT, PSO,EXB/OBT,EXB/PSO)
-	01412-10016		NUT	ﾅｯﾄ	2	[EXC/PSS][EXE/PSS][EXN/PSS]
4	02200-32032		PIN,COTTER	ﾋﾟﾝ	2	(WITHOUT EXC,EXE,EXN,OBT, PSO,EXB/OBT,EXB/PSO)
-	02200-32032		PIN,COTTER	ﾋﾟﾝ	2	[EXC/PSS][EXE/PSS][EXN/PSS]
5	01402-00022		NUT	ﾅｯﾄ	2	(WITHOUT EXC,EXE,EXN,OBT, PSO,EXB/OBT,EXB/PSO)
-	01402-00022		NUT	ﾅｯﾄ	2	[EXC/PSS][EXE/PSS][EXN/PSS]

FIG.67 STEERING AXLE

(F5014310) ステアリング゛アクスル

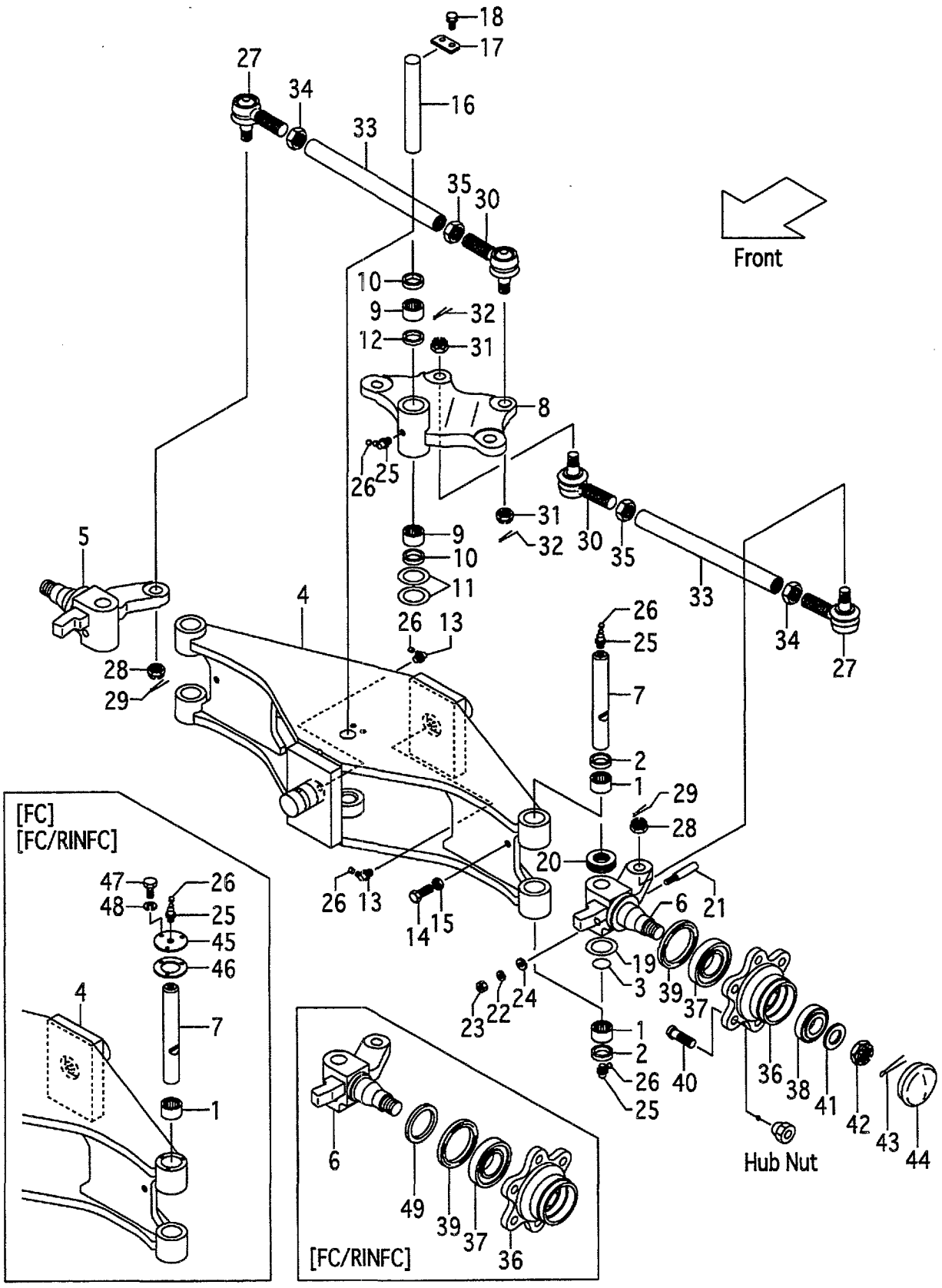

FIG.67
(F5014310)

A:FG10C19 FG10T19 FG15C19 FG15T19 FG18C19 FG18T19
B:FD10C19 FD10T19 FD15C19 FD15T19 FD18C19 FD18T19

Item No	Part No.	Mark	Description		Req'd	Remarks : Serial No.
A1	216G4-30201		AXLE-ASSY,STEERING	ｽﾃｱﾘﾝｸﾞｱｸｽﾙｱｯｾﾝ	1	INC.1-44
-	516G3-70011		AXLE-ASSY,STEERING	ｽﾃｱﾘﾝｸﾞｱｸｽﾙｱｯｾﾝ	1	[FC] INC.1-48
-	516G3-70021		AXLE-ASSY,STEERING	ｽﾃｱﾘﾝｸﾞｱｸｽﾙｱｯｾﾝ	1	[FC/RINFC] INC.1-49
1	22574-32062	*	BRG,NEEDLE	ﾍﾞｱﾘﾝｸﾞ	4	
2	24234-32231	*	SEAL,OIL	ｼｰﾙ	4	
-	24234-32231	*	SEAL,OIL	ｼｰﾙ	2	[FC][FC/RINFC]
3	24234-32241	*	O-RING	Oﾘﾝｸﾞ	2	
4	277H4-30211		AXLE,STEERING	ｱｸｽﾙ	1	
-	577H3-70101		AXLE,STEERING	ｱｸｽﾙ	1	[FC][FC/RINFC]
5	277H4-30301		KNUCKLE,RH	ﾅｯｸﾙ	1	
-	577H3-72001		KNUCKLE,RH	ﾅｯｸﾙ	1	[FC/RINFC]
6	277H4-30401		KNUCKLE,LH	ﾅｯｸﾙ	1	
-	577H3-72021		KNUCKLE,LH	ﾅｯｸﾙ	1	[FC/RINFC]
7	24234-32182		KINGPIN	ｷﾝｸﾞﾋﾟﾝ	2	
-	57023-72011		KINGPIN	ｷﾝｸﾞﾋﾟﾝ	2	[FC][FC/RINFC]
8	271A4-30311		ARM,CENTER	ｱｰﾑ	1	
9	22574-32062	*	BRG,NEEDLE	ﾍﾞｱﾘﾝｸﾞ	2	
-	22574-32121		BRG,NEEDLE	ﾍﾞｱﾘﾝｸﾞ	(2)	
10	24234-32231	*	SEAL,OIL	ｼｰﾙ	2	
11	20114-30091	*	SHIM,T-0.2	ｼﾑ	2	
12	24234-32123	*	SPACER	ｽﾍﾟｰｻ	1	
13	04901-00191	*	FITTING	ﾌｨｯﾃｨﾝｸﾞ	2	
14	01120-10030		BOLT	ﾎﾞﾙﾄ	2	
15	01402-00010		NUT	ﾅｯﾄ	2	
16	24234-32131		PIN,CENTER-ARM	ﾋﾟﾝ	1	
17	20224-30061	*	PLATE,SET	ﾌﾟﾚｰﾄ	1	
18	01183-08016		BOLT	ﾎﾞﾙﾄ	2	
19	20114-30091		SHIM,T-0.2	ｼﾑ	6	
20	22194-32222	*	BRG,THRUST	ﾍﾞｱﾘﾝｸﾞ	2	
21	20114-30081	*	PIN,LOCK	ﾋﾟﾝ	2	
22	02010-00008	*	WASHER	ﾜｯｼｬ	2	
23	01400-00008	*	NUT	ﾅｯﾄ	2	
24	02000-00008	*	WASHER	ﾜｯｼｬ	2	
25	04901-00160	*	FITTING	ﾌｨｯﾃｨﾝｸﾞ	5	
26	22199-12401	*	CAP,NIPPLE	ｷｬｯﾌﾟ	7	
A2	24234-30551		END-ASSY,ROD,RH	ｴﾝﾄﾞｱｯｾﾝ	2	INC.27-29
27	NO PART NO.	#	END,ROD,RH	ｴﾝﾄﾞ	2	
28	01412-10016		NUT,CASTLE	ﾅｯﾄ	2	
29	02200-32032		PIN,COTTER	ﾋﾟﾝ	2	
A3	24234-30561		END-ASSY,ROD,LH	ｴﾝﾄﾞｱｯｾﾝ	2	INC.30-32
30	NO PART NO.	#	END,ROD,LH	ｴﾝﾄﾞ	2	
31	01412-10016		NUT,CASTLE	ﾅｯﾄ	2	
32	02200-32032		PIN,COTTER	ﾋﾟﾝ	2	
33	24234-32271		ROD,TIE	ﾛｯﾄﾞ	2	
34	24234-32411		NUT,RH	ﾅｯﾄ	2	
35	24234-32421		NUT,LH	ﾅｯﾄ	2	
36	24234-32221		HUB	ﾊﾌﾞ	2	
37	12003-43021		BRG,TAPER-ROLLER	ﾍﾞｱﾘﾝｸﾞ	2	
38	03071-30206		BRG,TAPER-ROLLER	ﾍﾞｱﾘﾝｸﾞ	2	
39	22574-32102		SEAL,OIL	ｼｰﾙ	2	

FIG.67 STEERING AXLE

(F5014310) ステアリング゛アクスル

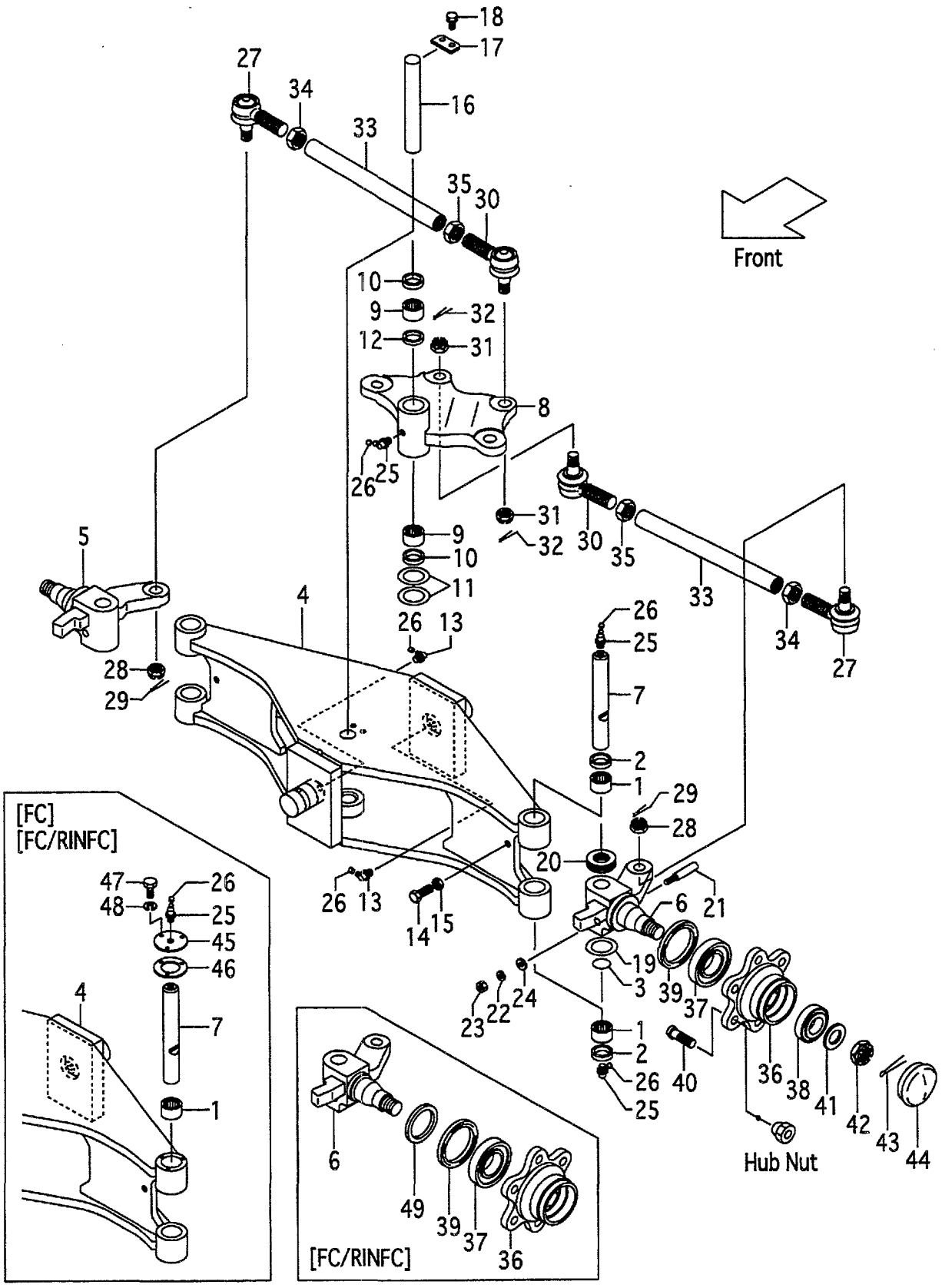

A:FG10C19 FG10T19 FG15C19 FG15T19 FG18C19 FG18T19
B:FD10C19 FD10T19 FD15C19 FD15T19 FD18C19 FD18T19

Item No	Part No.	Mark	Description		Req'd	Remarks : Serial No.
40	23654-32041		BOLT,HUB	ﾎﾞﾙﾄ	12	
41	02000-00024		WASHER	ﾜｯｼｬ	2	
42	01412-00024		NUT,CASTLE	ﾅｯﾄ	2	
43	02200-05045		PIN,COTTER	ﾋﾟﾝ	2	
44	22194-32361		CAP	ｷｬｯﾌﾟ	2	
45	57393-72251		PLATE,CAP	ﾌﾟﾚｰﾄ	2	[FC][FC/RINFC]
46	57393-72262		PACKING	ﾊﾟｯｷﾝｸﾞ	2	[FC][FC/RINFC]
47	01141-04012		BOLT	ﾎﾞﾙﾄ	6	[FC][FC/RINFC]
48	02010-10004		WASHER	ﾜｯｼｬ	6	[FC][FC/RINFC]
49	57393-72041		SEAT,OIL-SEAL	ｼｰﾄ	2	[FC/RINFC]
K1	24234-39803		KIT,REPAIR	ﾘﾍﾟｱｷｯﾄ	1	(4PCS)26(4PCS)(4PCS)
K2	24234-39813		KIT,REPAIR	ﾘﾍﾟｱｷｯﾄ	1	INC.9-13,17,25(1PCS)26(3PCS)

FIG.68 STEERING AXLE [EXC][EXE][EXN][OBT][PSO]

(F5014320) ステアリング゛アクスル

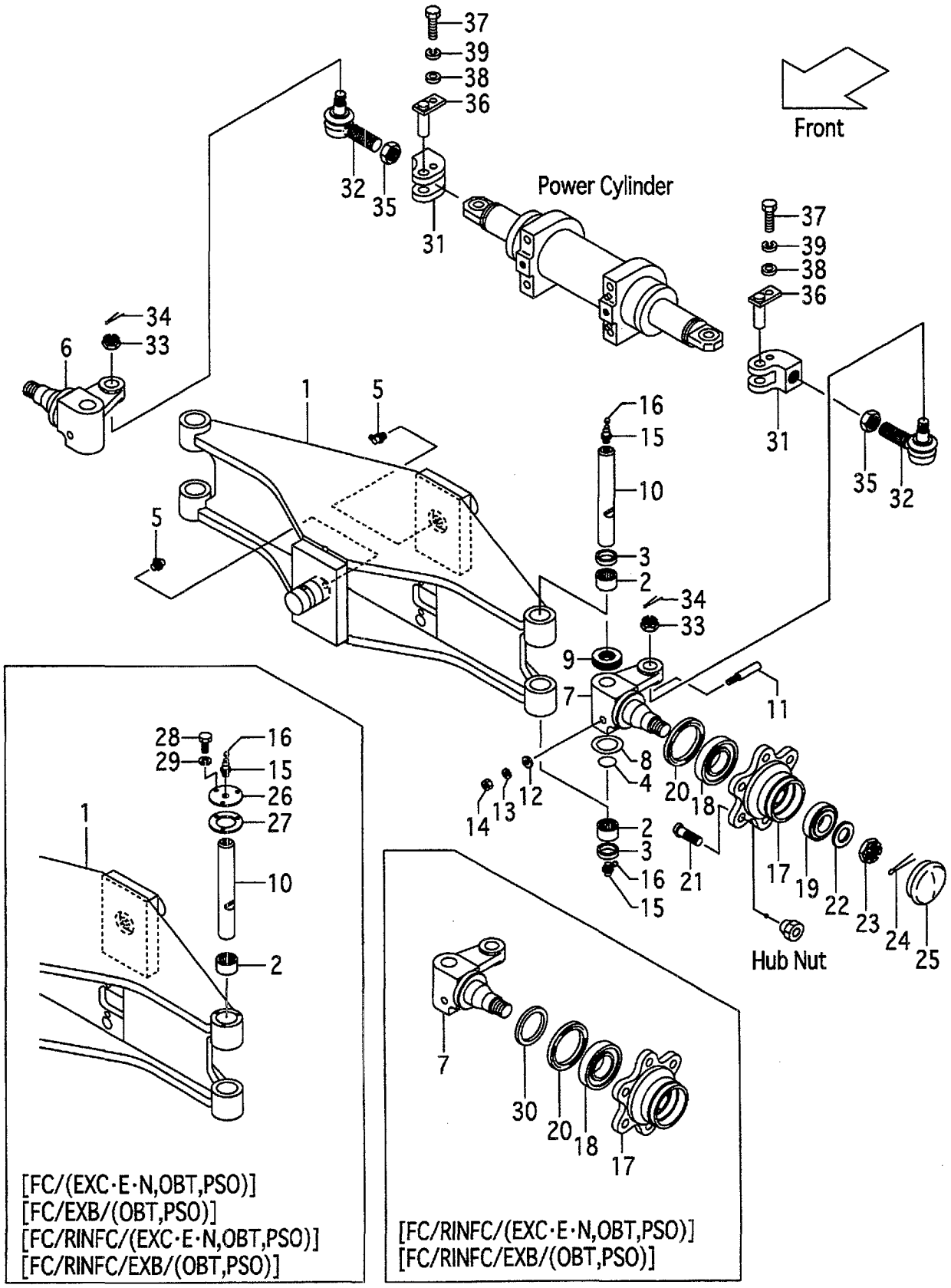

A:FG10C19 FG10T19 FG15C19 FG15T19 FG18C19 FG18T19
B:FD10C19 FD10T19 FD15C19 FD15T19 FD18C19 FD18T19

FIG.68
(F5014320)

Item No	Part No.	Mark	Description		Req'd	Remarks : Serial No.
A1	510F2-40101		AXLE-ASSY,STEERING	ｽﾃｱﾘﾝｸﾞｱｸｽﾙｱｯｾﾝ	1	[EXC][EXE][EXN][OBT][PSO] [EXB/OBT][EXB/PSO] INC.1-25
-	510F2-43001		AXLE-ASSY,STEERING	ｽﾃｱﾘﾝｸﾞｱｸｽﾙｱｯｾﾝ	1	[FC/EXC&E&N][FC/OBT][FC/PSO] INC.1-29
-	510F2-43001		AXLE-ASSY,STEERING	ｽﾃｱﾘﾝｸﾞｱｸｽﾙｱｯｾﾝ	1	[FC/EXB/OBT][FC/EXB/PSO] INC.1-29
-	510F2-44001		AXLE-ASSY,STEERING	ｽﾃｱﾘﾝｸﾞｱｸｽﾙｱｯｾﾝ	1	[FC/RINFC/EXC&E&N] INC.1-30
-	510F2-44001		AXLE-ASSY,STEERING	ｽﾃｱﾘﾝｸﾞｱｸｽﾙｱｯｾﾝ	1	[FC/RINFC/OBT][FC/RINFC/PSO] INC.1-30
-	510F2-44001		AXLE-ASSY,STEERING	ｽﾃｱﾘﾝｸﾞｱｸｽﾙｱｯｾﾝ	1	[FC/RINFC/EXB/OBT] [FC/RINFC/EXB/PSO] INC.1-30
1	510F2-40211		AXLE,STEERING	ｱｸｽﾙ	1	[EXC][EXE][EXN][OBT][PSO] [EXB/OBT][EXB/PSO]
-	510F2-43021		AXLE,STEERING	ｱｸｽﾙ	1	[FC/EXC&E&N][FC/OBT][FC/PSO]
-	510F2-43021		AXLE,STEERING	ｱｸｽﾙ	1	[FC/EXB/OBT][FC/EXB/PSO]
-	510F2-43021		AXLE,STEERING	ｱｸｽﾙ	1	[FC/RINFC/EXC&E&N] [FC/RINFC/OBT][FC/RINFC/PSO]
-	510F2-43021		AXLE,STEERING	ｱｸｽﾙ	1	[FC/RINFC/EXB/OBT] [FC/RINFC/EXB/PSO]
2	22574-32062	*	BRG,NEEDLE	ﾍﾞｱﾘﾝｸﾞ	4	[EXC][EXE][EXN][OBT][PSO] [EXB/OBT][EXB/PSO]
3	24234-32231	*	SEAL,OIL	ｼｰﾙ	4	[EXC][EXE][EXN][OBT][PSO] [EXB/OBT][EXB/PSO]
-	24234-32231	*	SEAL,OIL	ｼｰﾙ	2	[FC/EXC&E&N][FC/OBT][FC/PSO]
-	24234-32231	*	SEAL,OIL	ｼｰﾙ	2	[FC/EXB/OBT][FC/EXB/PSO]
-	24234-32231	*	SEAL,OIL	ｼｰﾙ	2	[FC/RINFC/EXC&E&N] [FC/RINFC/OBT][FC/RINFC/PSO]
-	24234-32231	*	SEAL,OIL	ｼｰﾙ	2	[FC/RINFC/EXB/OBT] [FC/RINFC/EXB/PSO]
4	24234-32241	*	O-RING	Oﾘﾝｸﾞ	2	[EXC][EXE][EXN][OBT][PSO] [EXB/OBT][EXB/PSO]
5	04901-00191		FITTING	ﾌｨｯﾃｨﾝｸﾞ	2	[EXC][EXE][EXN][OBT][PSO] [EXB/OBT][EXB/PSO]
6	510F2-40301		KNUCKLE,RH	ﾅｯｸﾙ	1	[EXC][EXE][EXN][OBT][PSO] [EXB/OBT][EXB/PSO]
-	510F2-43041		KNUCKLE,RH	ﾅｯｸﾙ	1	[FC/RINFC/EXC&E&N] [FC/RINFC/OBT][FC/RINFC/PSO]
-	510F2-43041		KNUCKLE,RH	ﾅｯｸﾙ	1	[FC/RINFC/EXB/OBT] [FC/RINFC/EXB/PSO]
7	510F2-40311		KNUCKLE,LH	ﾅｯｸﾙ	1	[EXC][EXE][EXN][OBT][PSO] [EXB/OBT][EXB/PSO]
-	510F2-43051		KNUCKLE,LH	ﾅｯｸﾙ	1	[FC/RINFC/EXC&E&N] [FC/RINFC/OBT][FC/RINFC/PSO]
-	510F2-43051		KNUCKLE,LH	ﾅｯｸﾙ	1	[FC/RINFC/EXB/OBT] [FC/RINFC/EXB/PSO]
8	20114-30091		SHIM,T-0.2	ｼﾑ	6	[EXC][EXE][EXN][OBT][PSO] [EXB/OBT][EXB/PSO]
9	22194-32222	*	BRG,THRUST	ﾍﾞｱﾘﾝｸﾞ	2	[EXC][EXE][EXN][OBT][PSO] [EXB/OBT][EXB/PSO]

FIG.68 STEERING AXLE [EXC][EXE][EXN][OBT][PSO]

(F5014320) ステアリング゛アクスル

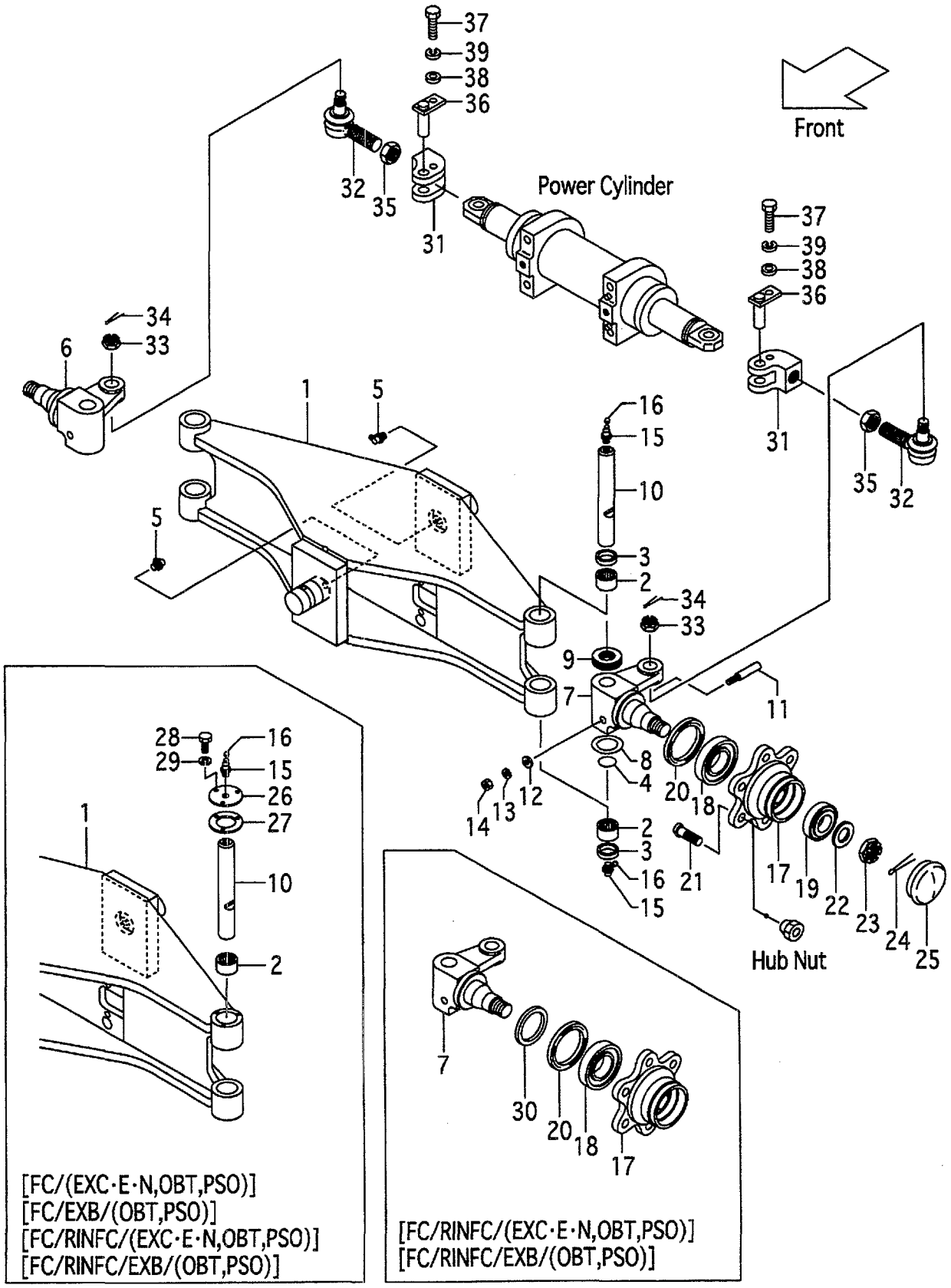

A:FG10C19 FG10T19 FG15C19 FG15T19 FG18C19 FG18T19
B:FD10C19 FD10T19 FD15C19 FD15T19 FD18C19 FD18T19

Item No	Part No.	Mark	Description		Req'd	Remarks : Serial No.
10	24234-32182		KINGPIN	ｷﾝｸﾞﾋﾟﾝ	2	[EXC][EXE][EXN][OBT][PSO] [EXB/OBT][EXB/PSO]
-	57023-72011		KINGPIN	ｷﾝｸﾞﾋﾟﾝ	2	[FC/EXC&E&N][FC/OBT][FC/PSO]
-	57023-72011		KINGPIN	ｷﾝｸﾞﾋﾟﾝ	2	[FC/EXB/OBT][FC/EXB/PSO]
-	57023-72011		KINGPIN	ｷﾝｸﾞﾋﾟﾝ	2	[FC/RINFC/EXC&E&N] [FC/RINFC/OBT][FC/RINFC/PSO]
-	57023-72011		KINGPIN	ｷﾝｸﾞﾋﾟﾝ	2	[FC/RINFC/EXB/OBT] [FC/RINFC/EXB/PSO]
11	20114-30081	*	PIN,LOCK	ﾋﾟﾝ	2	[EXC][EXE][EXN][OBT][PSO] [EXB/OBT][EXB/PSO]
12	02000-00008	*	WASHER	ﾜｯｼｬ	2	[EXC][EXE][EXN][OBT][PSO] [EXB/OBT][EXB/PSO]
13	02010-00008	*	WASHER	ﾜｯｼｬ	2	[EXC][EXE][EXN][OBT][PSO] [EXB/OBT][EXB/PSO]
14	01400-00008	*	NUT	ﾅｯﾄ	2	[EXC][EXE][EXN][OBT][PSO] [EXB/OBT][EXB/PSO]
15	04901-00160	*	FITTING	ﾌｨｯﾃｨﾝｸﾞ	4	[EXC][EXE][EXN][OBT][PSO] [EXB/OBT][EXB/PSO]
16	22199-12401	*	CAP,NIPPLE	ｷｬｯﾌﾟ	4	[EXC][EXE][EXN][OBT][PSO] [EXB/OBT][EXB/PSO]
17	24234-32221		HUB	ﾊﾌﾞ	2	[EXC][EXE][EXN][OBT][PSO] [EXB/OBT][EXB/PSO]
18	12003-43021		BRG,TAPER-ROLLER	ﾍﾞｱﾘﾝｸﾞ	2	[EXC][EXE][EXN][OBT][PSO] [EXB/OBT][EXB/PSO]
19	03071-30206		BRG,TAPER-ROLLER	ﾍﾞｱﾘﾝｸﾞ	2	[EXC][EXE][EXN][OBT][PSO] [EXB/OBT][EXB/PSO]
20	22574-32102		SEAL,OIL	ｼｰﾙ	2	[EXC][EXE][EXN][OBT][PSO] [EXB/OBT][EXB/PSO]
21	23654-32041		BOLT,HUB	ﾎﾞﾙﾄ	12	[EXC][EXE][EXN][OBT][PSO] [EXB/OBT][EXB/PSO]
22	02000-00024		WASHER	ﾜｯｼｬ	2	[EXC][EXE][EXN][OBT][PSO] [EXB/OBT][EXB/PSO]
23	01412-00024		NUT,CASTLE	ﾅｯﾄ	2	[EXC][EXE][EXN][OBT][PSO] [EXB/OBT][EXB/PSO]
24	02200-05045		PIN,COTTER	ﾋﾟﾝ	2	[EXC][EXE][EXN][OBT][PSO] [EXB/OBT][EXB/PSO]
25	22194-32361		CAP	ｷｬｯﾌﾟ	2	[EXC][EXE][EXN][OBT][PSO] [EXB/OBT][EXB/PSO]
26	57393-72251		PLATE,CAP	ﾌﾟﾚｰﾄ	2	[FC/EXC&E&N][FC/OBT][FC/PSO]
-	57393-72251		PLATE,CAP	ﾌﾟﾚｰﾄ	2	[FC/EXB/OBT][FC/EXB/PSO]
-	57393-72251		PLATE,CAP	ﾌﾟﾚｰﾄ	2	[FC/RINFC/EXC&E&N] [FC/RINFC/OBT][FC/RINFC/PSO]
-	57393-72251		PLATE,CAP	ﾌﾟﾚｰﾄ	2	[FC/RINFC/EXB/OBT] [FC/RINFC/EXB/PSO]
27	57393-72262		PACKING	ﾊﾟｯｷﾝｸﾞ	2	[FC/EXC&E&N][FC/OBT][FC/PSO]
-	57393-72262		PACKING	ﾊﾟｯｷﾝｸﾞ	2	[FC/EXB/OBT][FC/EXB/PSO]
-	57393-72262		PACKING	ﾊﾟｯｷﾝｸﾞ	2	[FC/RINFC/EXC&E&N] [FC/RINFC/OBT][FC/RINFC/PSO]
-	57393-72262		PACKING	ﾊﾟｯｷﾝｸﾞ	2	[FC/RINFC/EXB/OBT] [FC/RINFC/EXB/PSO]

FIG.68 STEERING AXLE [EXC][EXE][EXN][OBT][PSO]

(F5014320) ステアリング゛アクスル

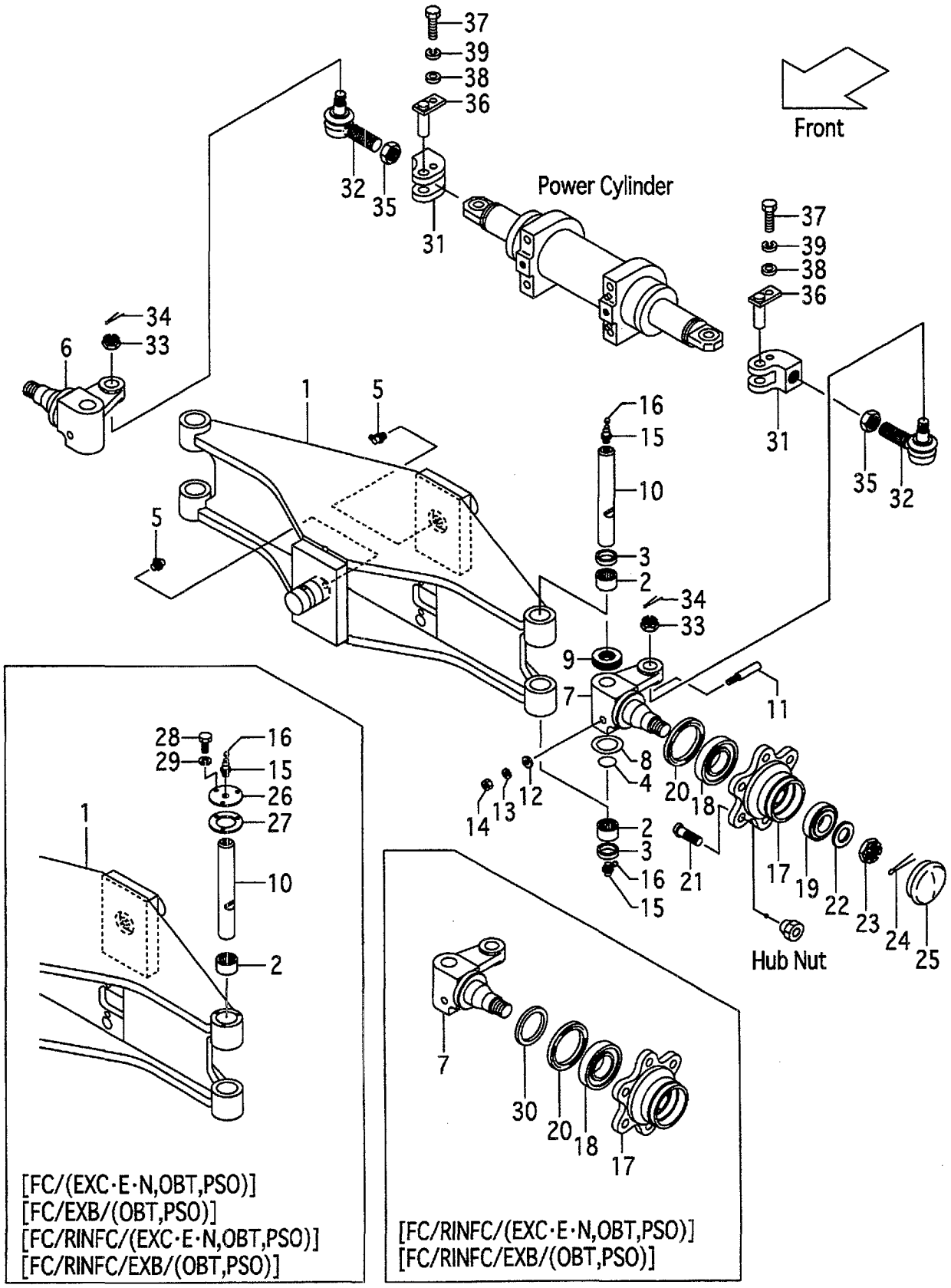

A:FG10C19 FG10T19 FG15C19 FG15T19 FG18C19 FG18T19
B:FD10C19 FD10T19 FD15C19 FD15T19 FD18C19 FD18T19

Item No	Part No.	Mark	Description		Req'd	Remarks : Serial No.
28	01141-04012		BOLT	ﾎﾞﾙﾄ	6	[FC/EXC&E&N][FC/OBT][FC/PSO]
-	01141-04012		BOLT	ﾎﾞﾙﾄ	6	[FC/EXB/OBT][FC/EXB/PSO]
-	01141-04012		BOLT	ﾎﾞﾙﾄ	6	[FC/RINFC/EXC&E&N] [FC/RINFC/OBT][FC/RINFC/PSO]
-	01141-04012		BOLT	ﾎﾞﾙﾄ	6	[FC/RINFC/EXB/OBT] [FC/RINFC/EXB/PSO]
29	02010-10004		WASHER	ﾜｯｼｬ	6	[FC/EXC&E&N][FC/OBT][FC/PSO]
-	02010-10004		WASHER	ﾜｯｼｬ	6	[FC/EXB/OBT][FC/EXB/PSO]
-	02010-10004		WASHER	ﾜｯｼｬ	6	[FC/RINFC/EXC&E&N] [FC/RINFC/OBT][FC/RINFC/PSO]
-	02010-10004		WASHER	ﾜｯｼｬ	6	[FC/RINFC/EXB/OBT] [FC/RINFC/EXB/PSO]
30	57393-72041		SEAT,OIL-SEAL	ｼｰﾄ	2	[FC/RINFC/EXC&E&N] [FC/RINFC/OBT][FC/RINFC/PSO]
-	57393-72041		SEAT,OIL-SEAL	ｼｰﾄ	2	[FC/RINFC/EXB/OBT] [FC/RINFC/EXB/PSO]
31	510F2-42262		END,ROD	ｴﾝﾄﾞ	2	[EXC][EXE][EXN][OBT][PSO] [EXB/OBT][EXB/PSO]
A2	24234-30551		END-ASSY,ROD,RH	ｴﾝﾄﾞｱｯｾﾝ	2	[EXC][EXE][EXN][OBT][PSO] [EXB/OBT][EXB/PSO] INC.32-34
32	NO PART NO.	#	END,ROD,RH	ｴﾝﾄﾞ	2	[EXC][EXE][EXN][OBT][PSO] [EXB/OBT][EXB/PSO]
33	01412-10016		NUT,CASTLE	ﾅｯﾄ	2	[EXC][EXE][EXN][OBT][PSO] [EXB/OBT][EXB/PSO]
34	02200-32032		PIN,COTTER	ﾋﾟﾝ	2	[EXC][EXE][EXN][OBT][PSO] [EXB/OBT][EXB/PSO]
35	24234-32411		NUT,RH	ﾅｯﾄ	2	[EXC][EXE][EXN][OBT][PSO] [EXB/OBT][EXB/PSO]
36	510F2-42301		PIN	ﾋﾟﾝ	2	[EXC][EXE][EXN][OBT][PSO] [EXB/OBT][EXB/PSO]
37	01103-08016		BOLT	ﾎﾞﾙﾄ	2	[EXC][EXE][EXN][OBT][PSO] [EXB/OBT][EXB/PSO]
38	02000-00008		WASHER	ﾜｯｼｬ	2	[EXC][EXE][EXN][OBT][PSO] [EXB/OBT][EXB/PSO]
39	02011-00008		WASHER	ﾜｯｼｬ	2	[EXC][EXE][EXN][OBT][PSO] [EXB/OBT][EXB/PSO]
K1	24234-39803		KIT,REPAIR	ﾘﾍﾟｱｷｯﾄ	1	[EXC&E&N][OBT][PSO] [EXB/OBT&PSO] INC.2-4,9,11-16

FIG.69 STEERING AXLE [(EXC,EXE,EXN)/PSS]

(F5014330) ステアリングアクスル

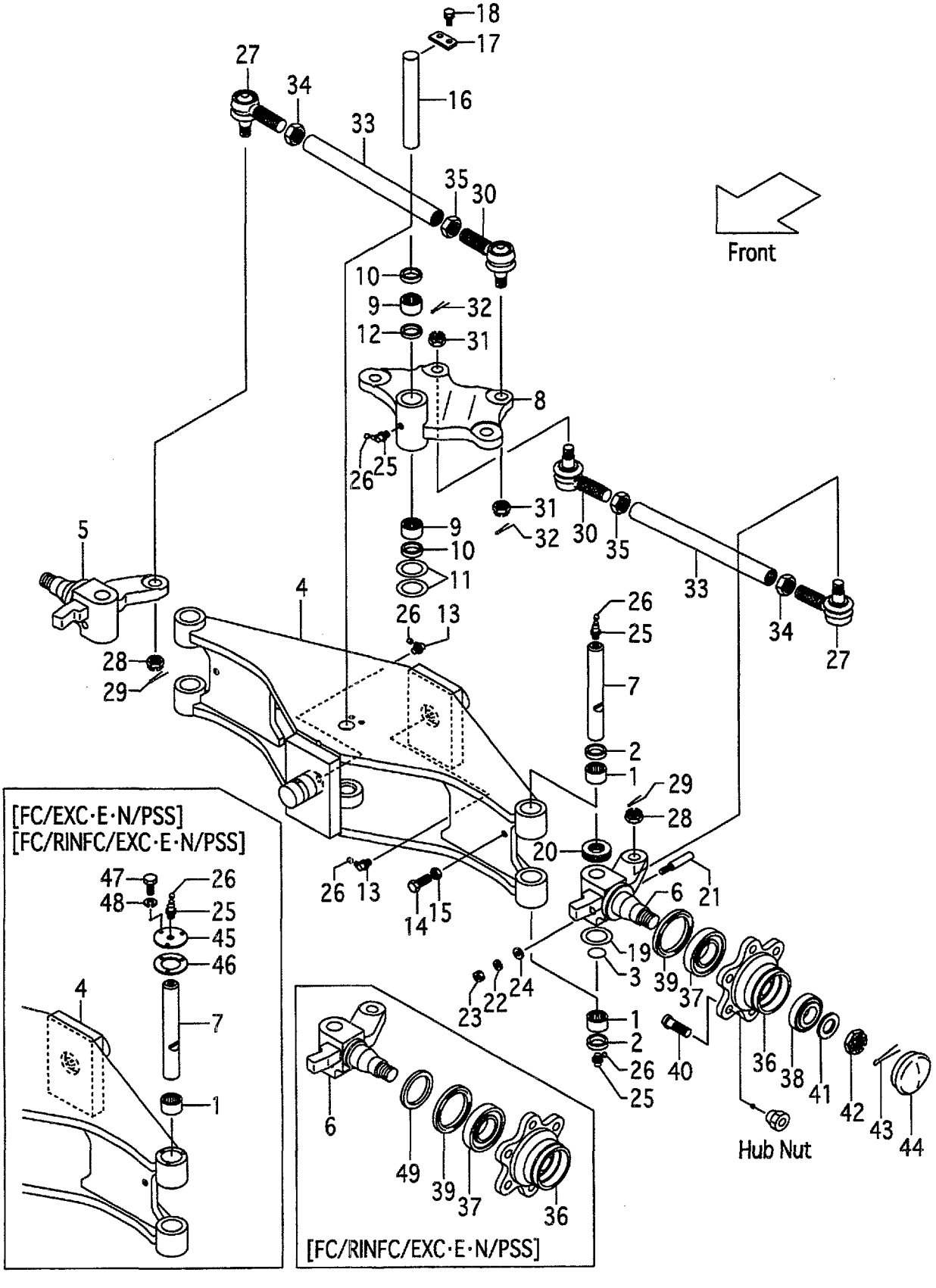

A:FG10C19 FG10T19 FG15C19 FG15T19 FG18C19 FG18T19
B:FD10C19 FD10T19 FD15C19 FD15T19 FD18C19 FD18T19

Item No	Part No.	Mark	Description		Req'd	Remarks : Serial No.
A1	216G4-30201		AXLE-ASSY,STEERING	ｽﾃｱﾘﾝｸﾞｱｸｽﾙｱｯｾﾝ	1	[EXC/PSS][EXE/PSS][EXN/PSS] INC.1-44
-	516G3-70011		AXLE-ASSY,STEERING	ｽﾃｱﾘﾝｸﾞｱｸｽﾙｱｯｾﾝ	1	[FC/EXC&E&N/PSS] INC.1-48
-	516G3-70021		AXLE-ASSY,STEERING	ｽﾃｱﾘﾝｸﾞｱｸｽﾙｱｯｾﾝ	1	[FC/RINFC/EXC&E&N/PSS] INC.1-49
1	22574-32062	*	BRG,NEEDLE	ﾍﾞｱﾘﾝｸﾞ	4	[EXC/PSS][EXE/PSS][EXN/PSS]
2	24234-32231	*	SEAL,OIL	ｼｰﾙ	4	[EXC/PSS][EXE/PSS][EXN/PSS]
-	24234-32231	*	SEAL,OIL	ｼｰﾙ	2	[FC/EXC&E&N/PSS] [FC/RINFC/EXC&E&N/PSS]
3	24234-32241	*	O-RING	Oﾘﾝｸﾞ	2	[EXC/PSS][EXE/PSS][EXN/PSS]
4	277H4-30211		AXLE,STEERING	ｱｸｽﾙ	1	[EXC/PSS][EXE/PSS][EXN/PSS]
-	577H3-70101		AXLE,STEERING	ｱｸｽﾙ	1	[FC/EXC&E&N/PSS] [FC/RINFC/EXC&E&N/PSS]
5	277H4-30301		KNUCKLE,RH	ﾅｯｸﾙ	1	[EXC/PSS][EXE/PSS][EXN/PSS]
-	577H3-72001		KNUCKLE,RH	ﾅｯｸﾙ	1	[FC/RINFC/EXC&E&N/PSS]
6	277H4-30401		KNUCKLE,LH	ﾅｯｸﾙ	1	[EXC/PSS][EXE/PSS][EXN/PSS]
-	577H3-72021		KNUCKLE,LH	ﾅｯｸﾙ	1	[FC/RINFC/EXC&E&N/PSS]
7	24234-32182		KINGPIN	ｷﾝｸﾞﾋﾟﾝ	2	[EXC/PSS][EXE/PSS][EXN/PSS]
-	57023-72011		KINGPIN	ｷﾝｸﾞﾋﾟﾝ	2	[FC/EXC&E&N/PSS] [FC/RINFC/EXC&E&N/PSS]
8	271A4-30311		ARM,CENTER	ｱｰﾑ	1	[EXC/PSS][EXE/PSS][EXN/PSS]
9	22574-32062	*	BRG,NEEDLE	ﾍﾞｱﾘﾝｸﾞ	2	[EXC/PSS][EXE/PSS][EXN/PSS]
-	22574-32121		BRG,NEEDLE	ﾍﾞｱﾘﾝｸﾞ	(2)	[EXC/PSS][EXE/PSS][EXN/PSS]
10	24234-32231	*	SEAL,OIL	ｼｰﾙ	2	[EXC/PSS][EXE/PSS][EXN/PSS]
11	20114-30091	*	SHIM,T-0.2	ｼﾑ	2	[EXC/PSS][EXE/PSS][EXN/PSS]
12	24234-32123	*	SPACER	ｽﾍﾟｰｻ	1	[EXC/PSS][EXE/PSS][EXN/PSS]
13	04901-00191	*	FITTING	ﾌｨｯﾃｨﾝｸﾞ	2	[EXC/PSS][EXE/PSS][EXN/PSS]
14	01120-10030		BOLT	ﾎﾞﾙﾄ	2	[EXC/PSS][EXE/PSS][EXN/PSS]
15	01402-00010		NUT	ﾅｯﾄ	2	[EXC/PSS][EXE/PSS][EXN/PSS]
16	24234-32131		PIN,CENTER-ARM	ﾋﾟﾝ	1	[EXC/PSS][EXE/PSS][EXN/PSS]
17	20224-30061	*	PLATE,SET	ﾌﾟﾚｰﾄ	1	[EXC/PSS][EXE/PSS][EXN/PSS]
18	01183-08016		BOLT	ﾎﾞﾙﾄ	2	[EXC/PSS][EXE/PSS][EXN/PSS]
19	20114-30091		SHIM,T-0.2	ｼﾑ	6	[EXC/PSS][EXE/PSS][EXN/PSS]
20	22194-32222	*	BRG,THRUST	ﾍﾞｱﾘﾝｸﾞ	2	[EXC/PSS][EXE/PSS][EXN/PSS]
21	20114-30081	*	PIN,LOCK	ﾋﾟﾝ	2	[EXC/PSS][EXE/PSS][EXN/PSS]
22	02010-00008	*	WASHER	ﾜｯｼｬ	2	[EXC/PSS][EXE/PSS][EXN/PSS]
23	01400-00008	*	NUT	ﾅｯﾄ	2	[EXC/PSS][EXE/PSS][EXN/PSS]
24	02000-00008	*	WASHER	ﾜｯｼｬ	2	[EXC/PSS][EXE/PSS][EXN/PSS]
25	04901-00160	*	FITTING	ﾌｨｯﾃｨﾝｸﾞ	5	[EXC/PSS][EXE/PSS][EXN/PSS]
26	22199-12401	*	CAP,NIPPLE	ｷｬｯﾌﾟ	7	[EXC/PSS][EXE/PSS][EXN/PSS]
A2	24234-30551		END-ASSY,ROD,RH	ｴﾝﾄﾞｱｯｾﾝ	2	[EXC/PSS][EXE/PSS][EXN/PSS] INC.27-29
27	NO PART NO.	*	END,ROD,RH	ｴﾝﾄﾞ	2	[EXC/PSS][EXE/PSS][EXN/PSS]
28	01412-10016		NUT,CASTLE	ﾅｯﾄ	2	[EXC/PSS][EXE/PSS][EXN/PSS]
29	02200-32032		PIN,COTTER	ﾋﾟﾝ	2	[EXC/PSS][EXE/PSS][EXN/PSS]
A3	24234-30561		END-ASSY,ROD,LH	ｴﾝﾄﾞｱｯｾﾝ	2	[EXC/PSS][EXE/PSS][EXN/PSS] INC.30-32
30	NO PART NO.	*	END,ROD,LH	ｴﾝﾄﾞ	2	[EXC/PSS][EXE/PSS][EXN/PSS]
31	01412-10016		NUT,CASTLE	ﾅｯﾄ	2	[EXC/PSS][EXE/PSS][EXN/PSS]
32	02200-32032		PIN,COTTER	ﾋﾟﾝ	2	[EXC/PSS][EXE/PSS][EXN/PSS]

FIG.69 STEERING AXLE [(EXC,EXE,EXN)/PSS]

(F5014330) ステアリングアクスル

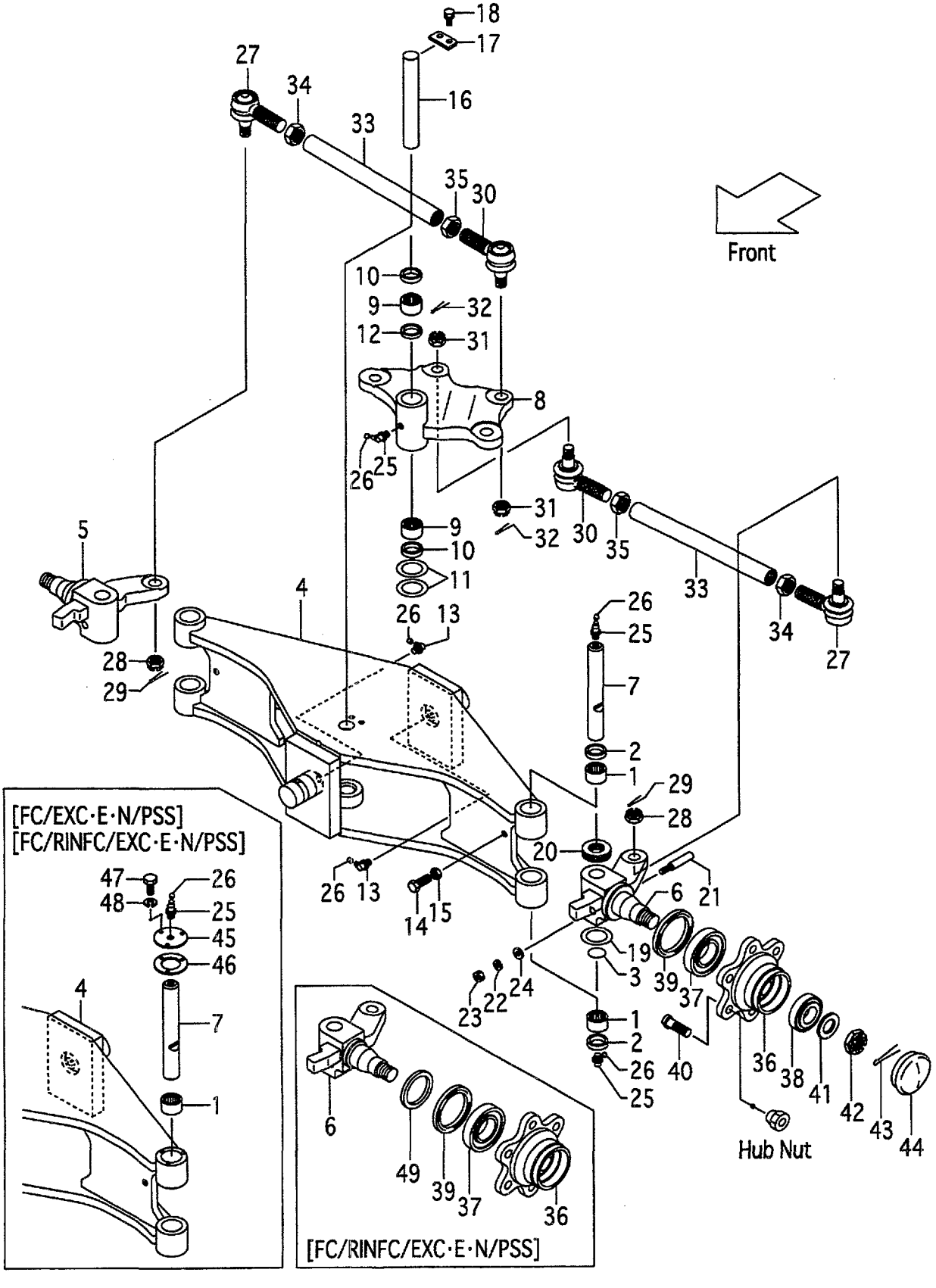

A:FG10C19 FG10T19 FG15C19 FG15T19 FG18C19 FG18T19
B:FD10C19 FD10T19 FD15C19 FD15T19 FD18C19 FD18T19

Item No	Part No.	Mark	Description		Req'd	Remarks : Serial No.
33	24234-32271		ROD,TIE	ﾛｯﾄﾞ	2	[EXC/PSS][EXE/PSS][EXN/PSS]
34	24234-32411		NUT,RH	ﾅｯﾄ	2	[EXC/PSS][EXE/PSS][EXN/PSS]
35	24234-32421		NUT,LH	ﾅｯﾄ	2	[EXC/PSS][EXE/PSS][EXN/PSS]
36	24234-32221		HUB	ﾊﾌﾞ	2	[EXC/PSS][EXE/PSS][EXN/PSS]
37	12003-43021		BRG,TAPER-ROLLER	ﾍﾞｱﾘﾝｸﾞ	2	[EXC/PSS][EXE/PSS][EXN/PSS]
38	03071-30206		BRG,TAPER-ROLLER	ﾍﾞｱﾘﾝｸﾞ	2	[EXC/PSS][EXE/PSS][EXN/PSS]
39	22574-32102		SEAL,OIL	ｼｰﾙ	2	[EXC/PSS][EXE/PSS][EXN/PSS]
40	23654-32041		BOLT,HUB	ﾎﾞﾙﾄ	12	[EXC/PSS][EXE/PSS][EXN/PSS]
41	02000-00024		WASHER	ﾜｯｼｬ	2	[EXC/PSS][EXE/PSS][EXN/PSS]
42	01412-00024		NUT,CASTLE	ﾅｯﾄ	2	[EXC/PSS][EXE/PSS][EXN/PSS]
43	02200-05045		PIN,COTTER	ﾋﾟﾝ	2	[EXC/PSS][EXE/PSS][EXN/PSS]
44	22194-32361		CAP	ｷｬｯﾌﾟ	2	[EXC/PSS][EXE/PSS][EXN/PSS]
45	57393-72251		PLATE,CAP	ﾌﾟﾚｰﾄ	2	[FC/EXC&E&N/PSS] [FC/RINFC/EXC&E&N/PSS]
46	57393-72262		PACKING	ﾊﾟｯｷﾝｸﾞ	2	[FC/EXC&E&N/PSS] [FC/RINFC/EXC&E&N/PSS]
47	01141-04012		BOLT	ﾎﾞﾙﾄ	6	[FC/EXC&E&N/PSS] [FC/RINFC/EXC&E&N/PSS]
48	02010-10004		WASHER	ﾜｯｼｬ	6	[FC/EXC&E&N/PSS] [FC/RINFC/EXC&E&N/PSS]
49	57393-72041		SEAT,OIL-SEAL	ｼｰﾄ	2	[FC/RINFC/EXC&E&N/PSS]
K1	24234-39803		KIT,REPAIR	ﾘﾍﾟｱｷｯﾄ	1	[EXC&E&N/PSS] INC.1-3,20-24,25(4PCS), 26(5PCS)
K2	24234-39813		KIT,REPAIR	ﾘﾍﾟｱｷｯﾄ	1	[EXC&E&N/PSS] INC.9-13,17(1PCS),25(4PCS)

FIG.70 AXLE SUPPORT

(F5014340) アクスルサポート

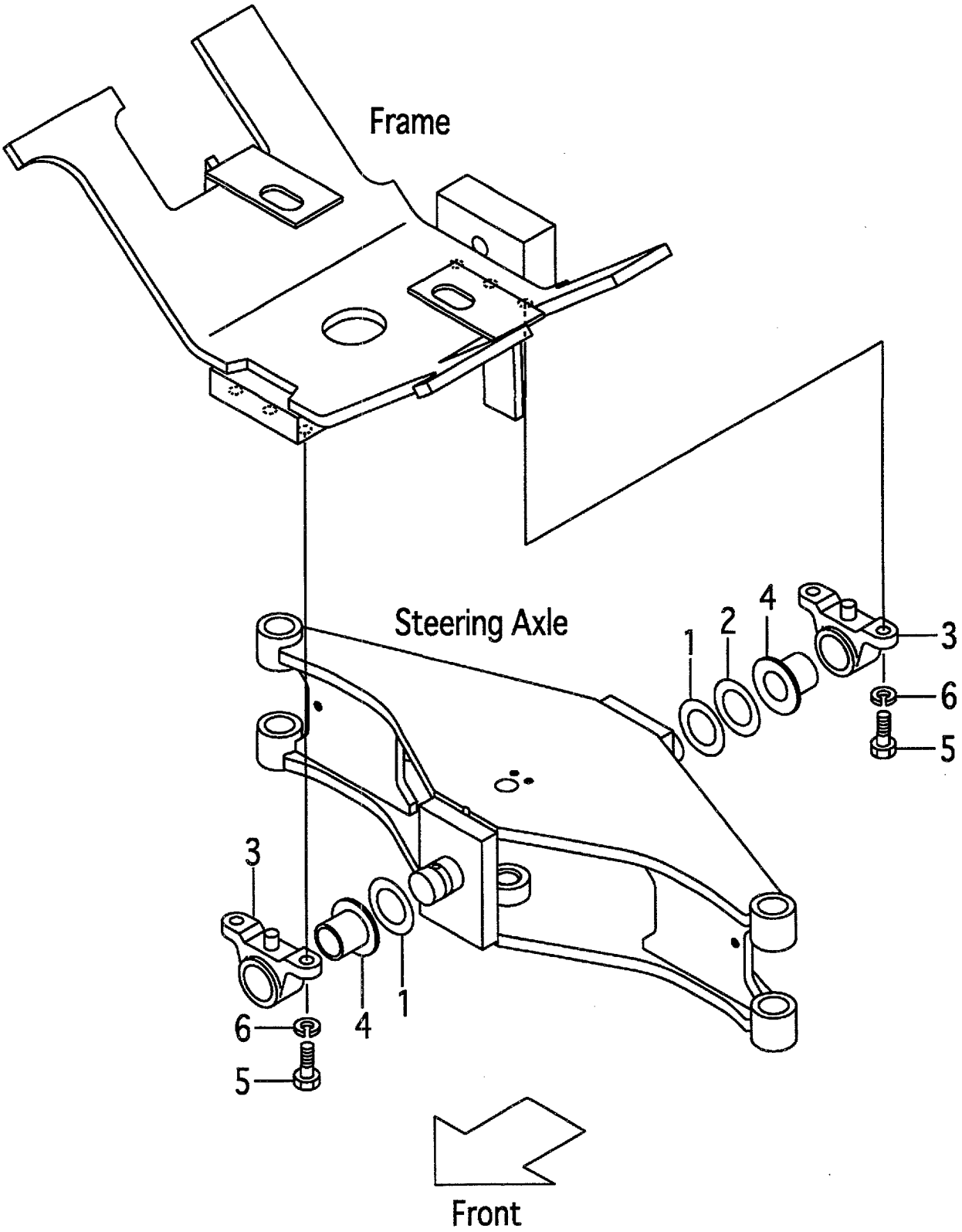

FIG.70
(F5014340)

A:FG10C19 FG10T19 FG15C19 FG15T19 FG18C19 FG18T19
B:FD10C19 FD10T19 FD15C19 FD15T19 FD18C19 FD18T19

Item No	Part No.	Mark	Description		Req'd	Remarks : Serial No.
1	23458-52031		SHIM,T-1.0	ｼﾑ	2	
2	24234-32501		SHIM,T-0.5	ｼﾑ	1	
3	24236-12572		SUPPORT,REAR-AXLE	ｻﾎﾟｰﾄ	2	
4	24236-12581		BUSHING	ﾌﾞｯｼﾝｸﾞ	2	
5	01100-14040		BOLT	ﾎﾞﾙﾄ	4	
6	02010-00014		WASHER	ﾜｯｼｬ	4	

FIG.71 HUB NUT
(F5014410) ﾊﾌﾞﾅｯﾄ

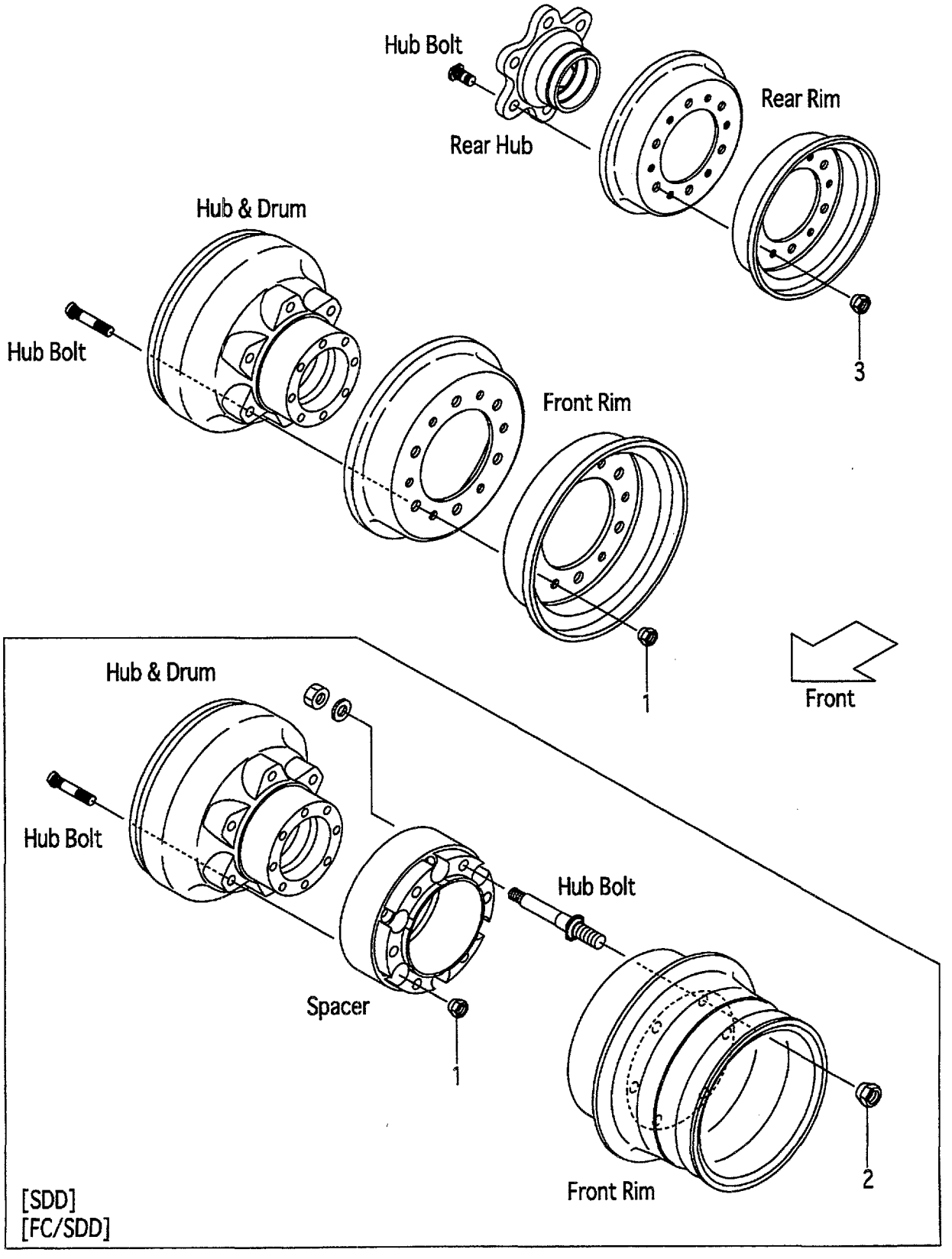

FIG.71
(F5014410)

A:FG10C19 FG10T19 FG15C19 FG15T19 FG18C19 FG18T19
B:FD10C19 FD10T19 FD15C19 FD15T19 FD18C19 FD18T19

Item No	Part No.	Mark	Description	Req'd	Remarks : Serial No.
1	23654-34051		NUT,HUB ナット	12	(FRONT)
-	57045-52151		NUT,HUB ナット	12	[FC][FC/SDD](FRONT)
2	54237-43021		NUT,HUB ナット	12	[SDD](FRONT-OUTSIDE)
-	54023-72081		NUT,HUB ナット	12	[FC/SDD](FRONT-OUTSIDE)
3	23654-34051		NUT,HUB ナット	12	(REAR)
-	57045-52151		NUT,HUB ナット	12	[FC](REAR)

FIG.72 FRONT WHEEL (1.0T,1.5T)

(F5014420) フロントホイール

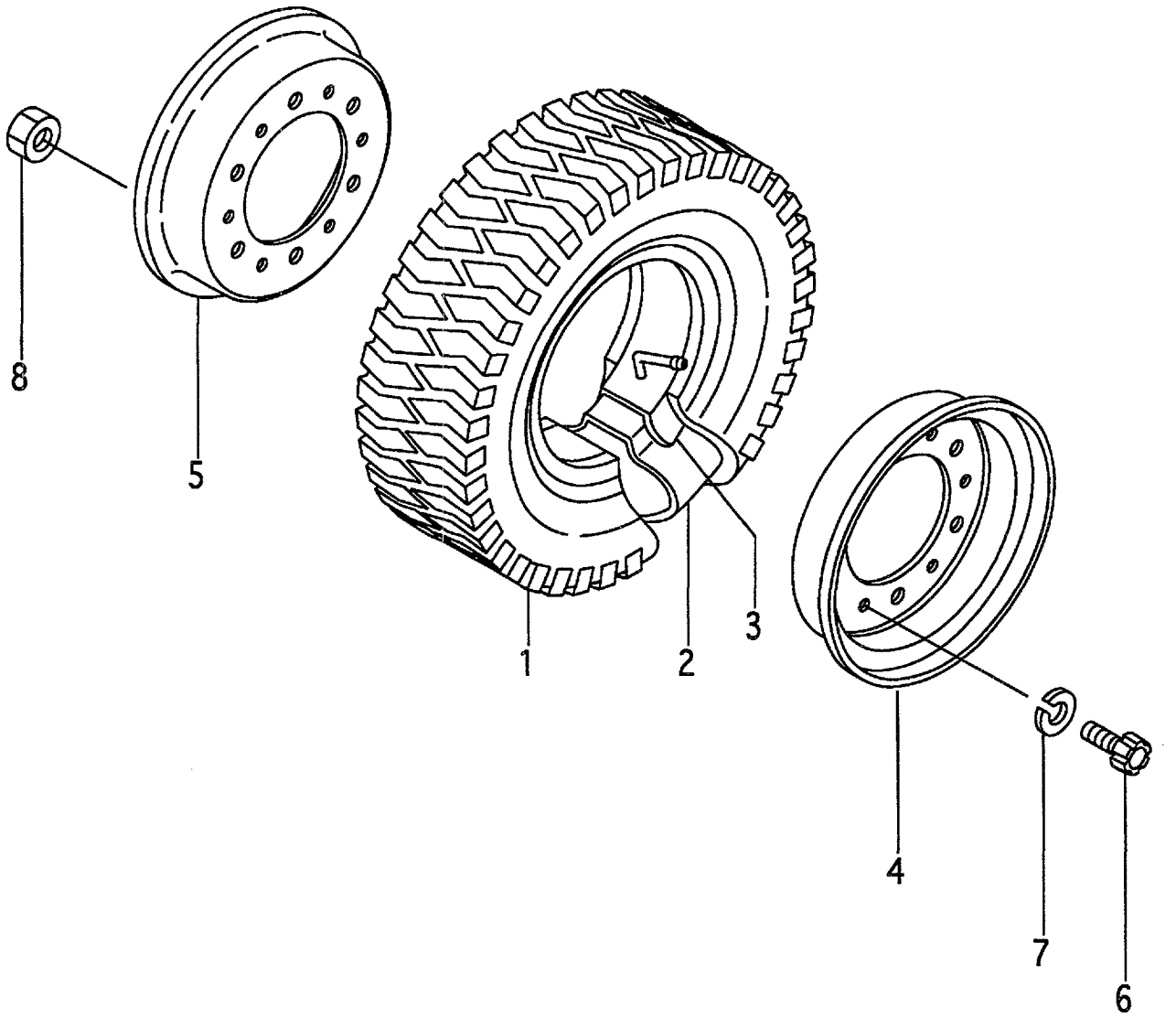

A:FG10C19 FG10T19 C:FD10C19 FD10T19
B:FG15C19 FG15T19 D:FD15C19 FD15T19

Item No	Part No.	Mark	Description		Req'd	Remarks : Serial No.
A1	24154-40101		WHEEL-ASSY,FRONT	ﾌﾛﾝﾄﾎｲｰﾙｱｯｾﾝ	2	A,C INC.1-8
-	52576-80902		WHEEL-ASSY,FRONT	ﾌﾛﾝﾄﾎｲｰﾙｱｯｾﾝ	2	B,D INC.1-8
-	52576-80902		WHEEL-ASSY,FRONT	ﾌﾛﾝﾄﾎｲｰﾙｱｯｾﾝ	2	A,C [EX] INC.1-8
1	06009-65010		TIRE,650-10-8	ﾀｲﾔ	2	A,C
-	06006-65010		TIRE,650-10-10	ﾀｲﾔ	2	B,D
-	06006-65010		TIRE,650-10-10	ﾀｲﾔ	2	A,C [EX]
2	06712-65010		TUBE,650-10-10T	ﾁｭｰﾌﾞ	2	A,C
-	06711-65010		TUBE,650-10-10T	ﾁｭｰﾌﾞ	2	B,D
-	06711-65010		TUBE,650-10-10T	ﾁｭｰﾌﾞ	2	A,C [EX]
3	06702-65010		FLAP,650-10-10F	ﾌﾗｯﾌﾟ	2	A,C
-	06701-65010		FLAP,650-10-10F	ﾌﾗｯﾌﾟ	2	B,D
-	06701-65010		FLAP,650-10-10F	ﾌﾗｯﾌﾟ	2	A,C [EX]
A2	22574-40303		RIM-ASSY,500F-10	ﾘﾑｱｯｾﾝ	2	INC.4,5
4	NO PART NO.	#	RIM,OUTSIDE	ﾘﾑ	2	
5	NO PART NO.	#	RIM,INSIDE	ﾘﾑ	2	
6	510F3-82611		BOLT	ﾎﾞﾙﾄ	12	
7	02011-00012		WASHER	ﾜｯｼｬ	12	
8	01402-10012		NUT	ﾅｯﾄ	12	

FIG.73 FRONT WHEEL (1.8T)

(F5014430) フロントホイール

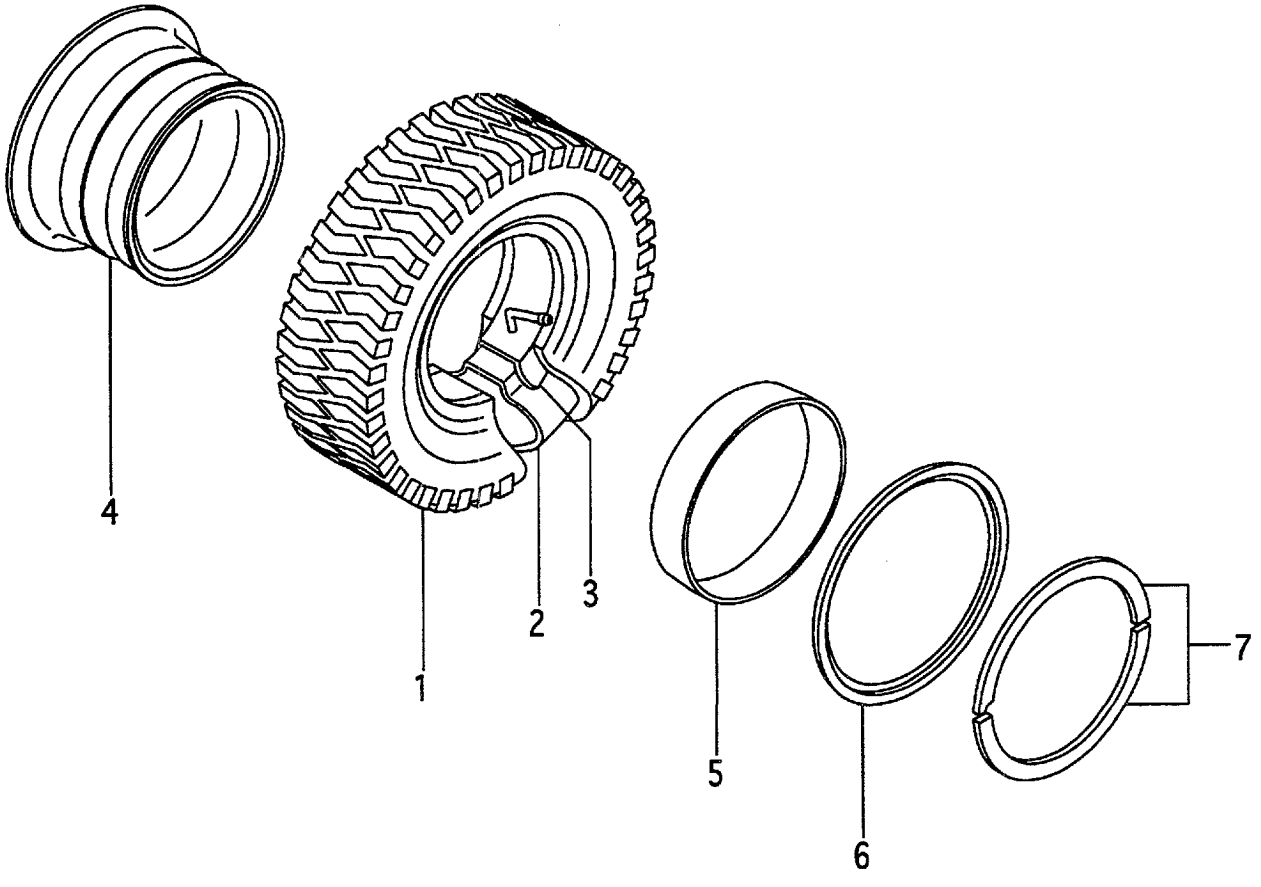

A:FG18C19 FG18T19
B:FD18C19 FD18T19

Item No	Part No.	Mark	Description		Req'd	Remarks : Serial No.
A1	54276-80401		WHEEL-ASSY,FRONT	ﾌﾛﾝﾄﾎｲｰﾙｱｯｾﾝ	2	INC.1-7
1	06006-65010		TIRE,650-10-10	ﾀｲﾔ	2	
2	06711-65010		TUBE,650-10-10T	ﾁｭｰﾌﾞ	2	
3	06701-65010		FLAP,650-10-10F	ﾌﾗｯﾌﾟ	2	
A2	24274-40501		RIM-ASSY,500F-10	ﾘﾑｱｯｾﾝ	2	INC.4-7
4	NO PART NO.	#	RIM	ﾘﾑ	2	
5	54236-83011		BAND	ﾊﾞﾝﾄﾞ	2	
6	54236-83021		FLANGE,SIDE	ﾌﾗﾝｼﾞ	2	
7	54236-83031		RING,LOCK	ﾘﾝｸﾞ	2	

FIG.74 FRONT WHEEL (1.0T,1.5T):[DR F]

(F5014440) フロントホイール

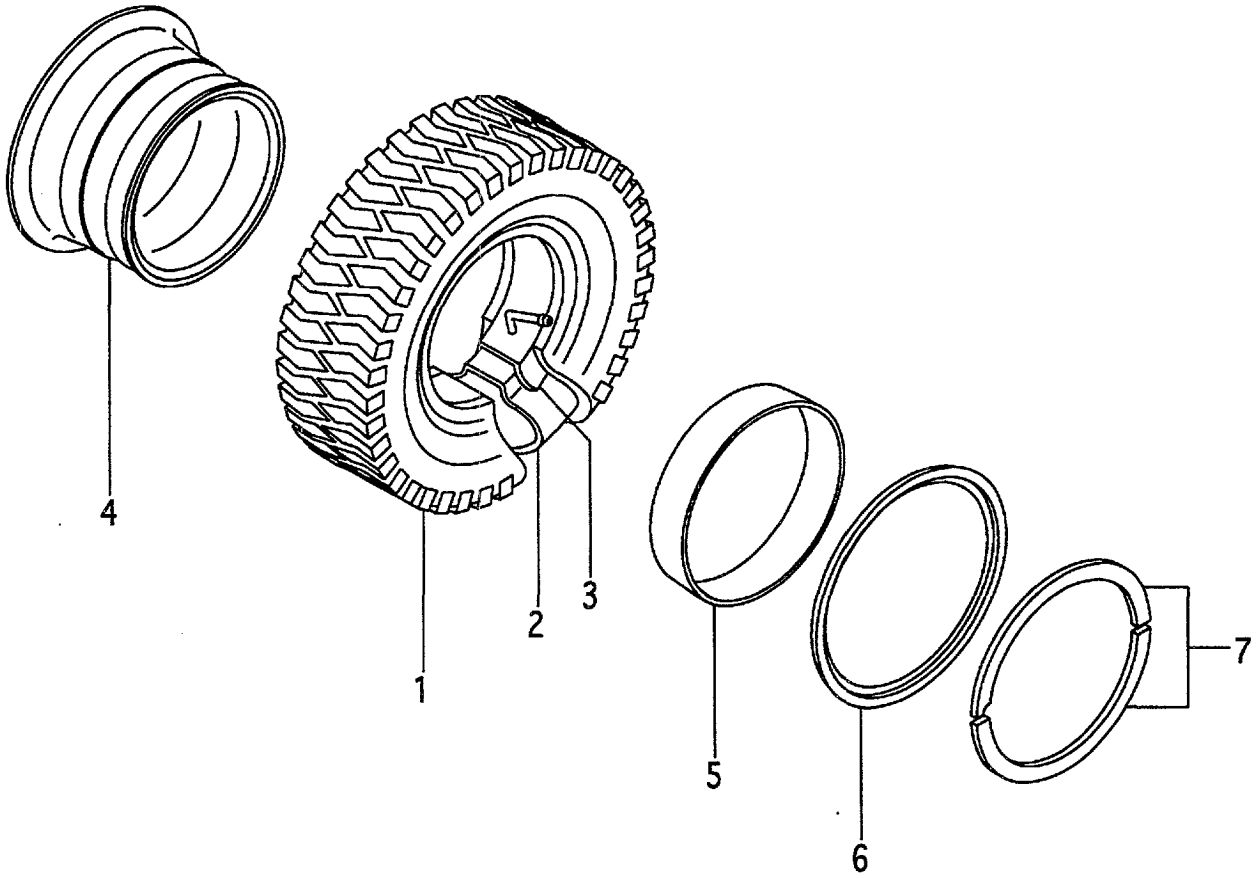

A:FG10C19 FG10T19 C:FD10C19 FD10T19
B:FG15C19 FG15T19 D:FD15C19 FD15T19

Item No	Part No.	Mark	Description		Req'd	Remarks : Serial No.
A1	516B6-80302		WHEEL-ASSY,FRONT	ﾌﾛﾝﾄﾎｲｰﾙｱｯｾﾝ	2	A,C [DR F] INC.1-7
-	54236-80141		WHEEL-ASSY,FRONT	ﾌﾛﾝﾄﾎｲｰﾙｱｯｾﾝ	2	B,D [DR F] INC.1-7
-	54236-80141		WHEEL-ASSY,FRONT	ﾌﾛﾝﾄﾎｲｰﾙｱｯｾﾝ	2	A,C [EX/DR F] INC.1-7
1	06009-65010		TIRE,650-10-8	ﾀｲﾔ	2	A,C [DR F]
-	06006-65010		TIRE,650-10-10	ﾀｲﾔ	2	B,D [DR F]
-	06006-65010		TIRE,650-10-10	ﾀｲﾔ	2	A,C [EX/DR F]
2	06712-65010		TUBE,650-10-10T	ﾁｭｰﾌﾞ	2	A,C [DR F]
-	06711-65010		TUBE,650-10-10T	ﾁｭｰﾌﾞ	2	B,D [DR F]
-	06711-65010		TUBE,650-10-10T	ﾁｭｰﾌﾞ	2	A,C [EX/DR F]
3	06702-65010		FLAP,650-10-10F	ﾌﾗｯﾌﾟ	2	A,C [DR F]
-	06701-65010		FLAP,650-10-10F	ﾌﾗｯﾌﾟ	2	B,D [DR F]
-	06701-65010		FLAP,650-10-10F	ﾌﾗｯﾌﾟ	2	A,C [EX/DR F]
A2	54236-80181		RIM-ASSY,500F-10	ﾘﾑｱｯｾﾝ	2	[DR F] INC.4-7
4	NO PART NO.	#	RIM	ﾘﾑ	2	[DR F]
5	54236-83011		BAND	ﾊﾞﾝﾄﾞ	2	[DR F]
6	54236-83021		FLANGE,SIDE	ﾌﾗﾝｼﾞ	2	[DR F]
7	54236-83031		RING,LOCK	ﾘﾝｸﾞ	2	[DR F]

FIG.75 FRONT WHEEL (1.0T,1.5T):[TJ F][TJSF][T F][TS F]

(F5014450) フロントホイール

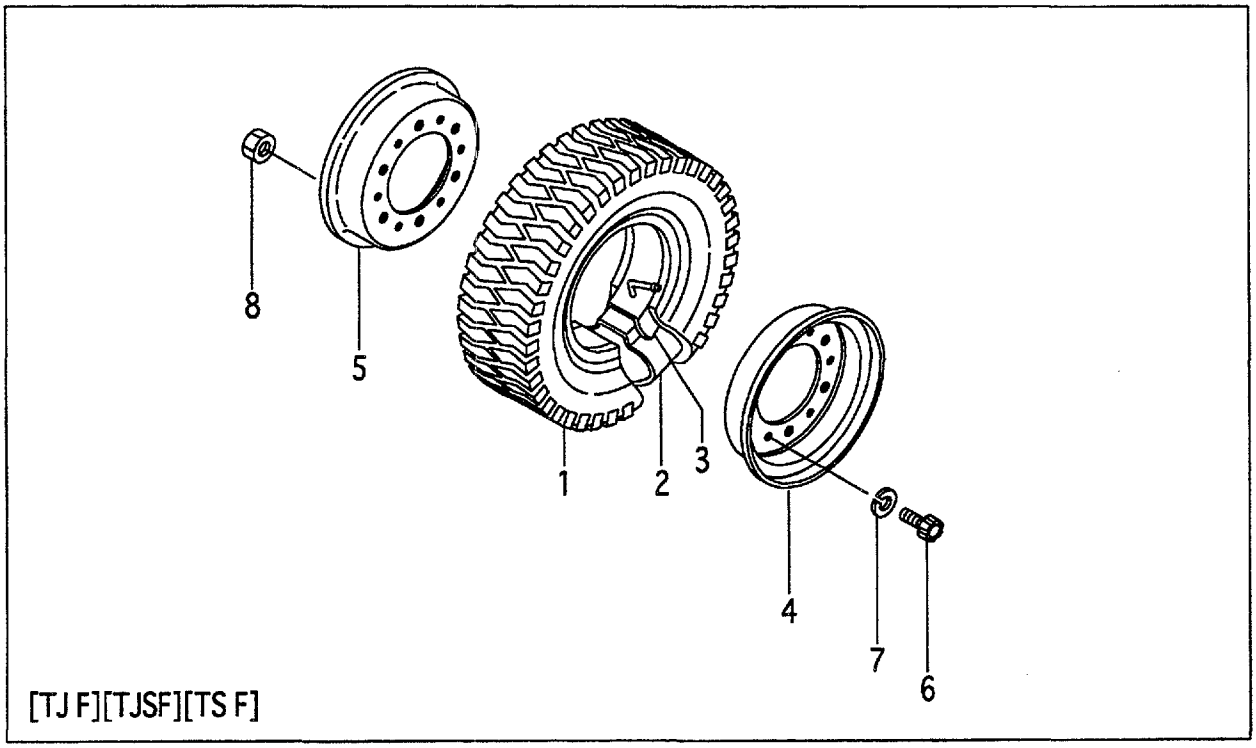

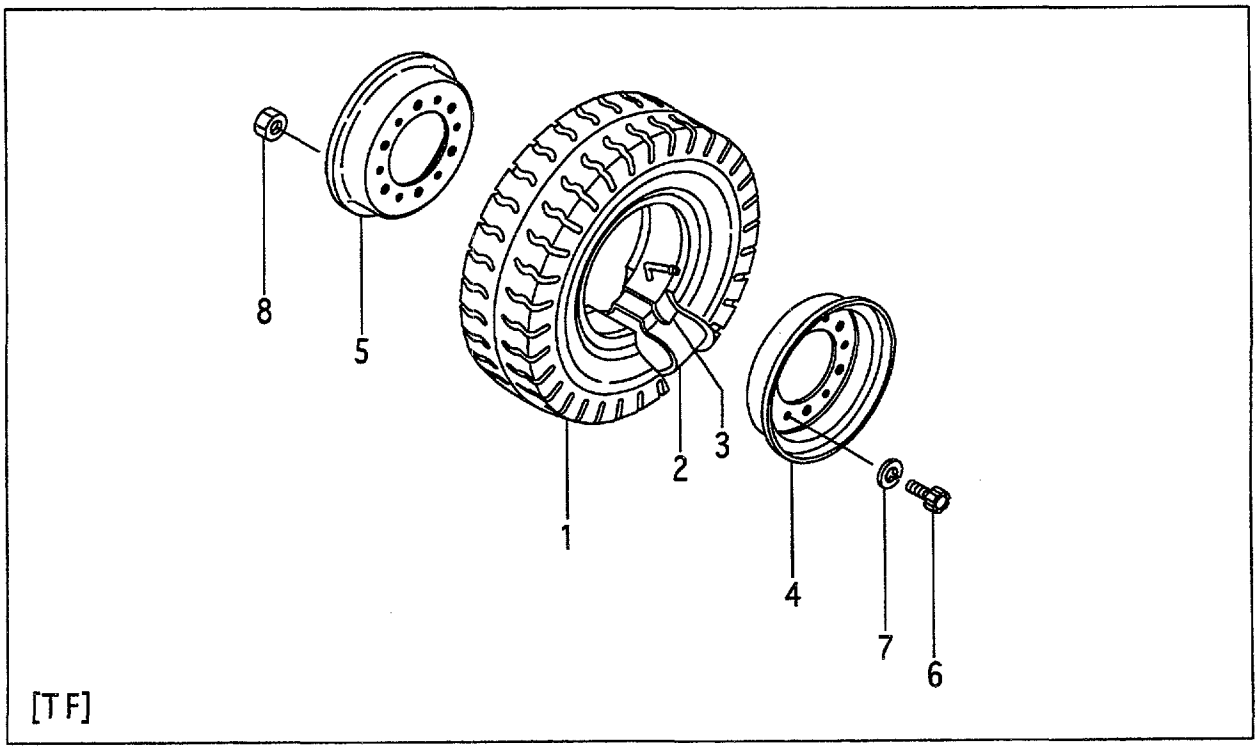

A:FG10C19 FG10T19 C:FD10C19 FD10T19
B:FG15C19 FG15T19 D:FD15C19 FD15T19

FIG.75
(F5014450)

Item No	Part No.	Mark	Description		Req'd	Remarks : Serial No.
A1	24154-40101		WHEEL-ASSY,FRONT	ﾌﾛﾝﾄﾎｲｰﾙｱｯｾﾝ	2	A,C [TJ F] INC.1-8
-	52576-80902		WHEEL-ASSY,FRONT	ﾌﾛﾝﾄﾎｲｰﾙｱｯｾﾝ	2	B,D [TJ F] INC.1-8
-	52576-80902		WHEEL-ASSY,FRONT	ﾌﾛﾝﾄﾎｲｰﾙｱｯｾﾝ	2	A,C [TJ F/EX] INC.1-8
-	52576-80702		WHEEL-ASSY,FRONT	ﾌﾛﾝﾄﾎｲｰﾙｱｯｾﾝ	2	[TJSF] INC.1-8
-	25414-40201		WHEEL-ASSY,FRONT	ﾌﾛﾝﾄﾎｲｰﾙｱｯｾﾝ	2	A,C [T F] INC.1-8
-	22574-40202		WHEEL-ASSY,FRONT	ﾌﾛﾝﾄﾎｲｰﾙｱｯｾﾝ	2	B,D [T F] INC.1-8
-	22574-40202		WHEEL-ASSY,FRONT	ﾌﾛﾝﾄﾎｲｰﾙｱｯｾﾝ	2	A,C [T F/EX] INC.1-8
-	52576-80502		WHEEL-ASSY,FRONT	ﾌﾛﾝﾄﾎｲｰﾙｱｯｾﾝ	2	[TS F] INC.1-8
1	06009-65010		TIRE,650-10-8	ﾀｲﾔ	2	A,C [TJ F]
-	06006-65010		TIRE,650-10-10	ﾀｲﾔ	2	B,D [TJ F]
-	06006-65010		TIRE,650-10-10	ﾀｲﾔ	2	A,C [TJ F/EX]
-	06005-65010		TIRE,650-10-10	ﾀｲﾔ	2	[TJSF]
-	06002-65010		TIRE,650-10-8	ﾀｲﾔ	2	A,C [T F]
-	06001-65010		TIRE,650-10-10	ﾀｲﾔ	2	B,D [T F]
-	06001-65010		TIRE,650-10-10	ﾀｲﾔ	2	A,C [T F/EX]
-	06007-65010		TIRE,650-10-10	ﾀｲﾔ	2	[TS F]
2	06712-65010		TUBE,650-10-10T	ﾁｭｰﾌﾞ	2	A,C [TJ F][T F]
-	06711-65010		TUBE,650-10-10T	ﾁｭｰﾌﾞ	2	B,D [TJ F][T F]
-	06711-65010		TUBE,650-10-10T	ﾁｭｰﾌﾞ	2	A,C [TJ F/EX][T F/EX]
-	06711-65010		TUBE,650-10-10T	ﾁｭｰﾌﾞ	2	[TJSF][TS F]
3	06702-65010		FLAP,650-10-10F	ﾌﾗｯﾌﾟ	2	A,C [TJ F][T F]
-	06701-65010		FLAP,650-10-10F	ﾌﾗｯﾌﾟ	2	B,D [TJ F][T F]
-	06701-65010		FLAP,650-10-10F	ﾌﾗｯﾌﾟ	2	A,C [TJ F/EX][T F/EX]
-	06701-65010		FLAP,650-10-10F	ﾌﾗｯﾌﾟ	2	[TJSF][TS F]
A2	22574-40303		RIM-ASSY,500F-10	ﾘﾑｱｯｾﾝ	2	[TJ F][TJSF][T F][TS F] INC.4,5
4	NO PART NO.	#	RIM,OUTSIDE	ﾘﾑ	2	[TJ F][TJSF][T F][TS F]
5	NO PART NO.	#	RIM,INSIDE	ﾘﾑ	2	[TJ F][TJSF][T F][TS F]
6	510F3-82611		BOLT	ﾎﾞﾙﾄ	12	[TJ F][TJSF][T F][TS F]
7	02011-00012		WASHER	ﾜｯｼｬ	12	[TJ F][TJSF][T F][TS F]
8	01402-10012		NUT	ﾅｯﾄ	12	[TJ F][TJSF][T F][TS F]

FIG.76 FRONT WHEEL (1.8T):[TJ F][TJSF][T F][TS F]

(F5014460) フロントホイール

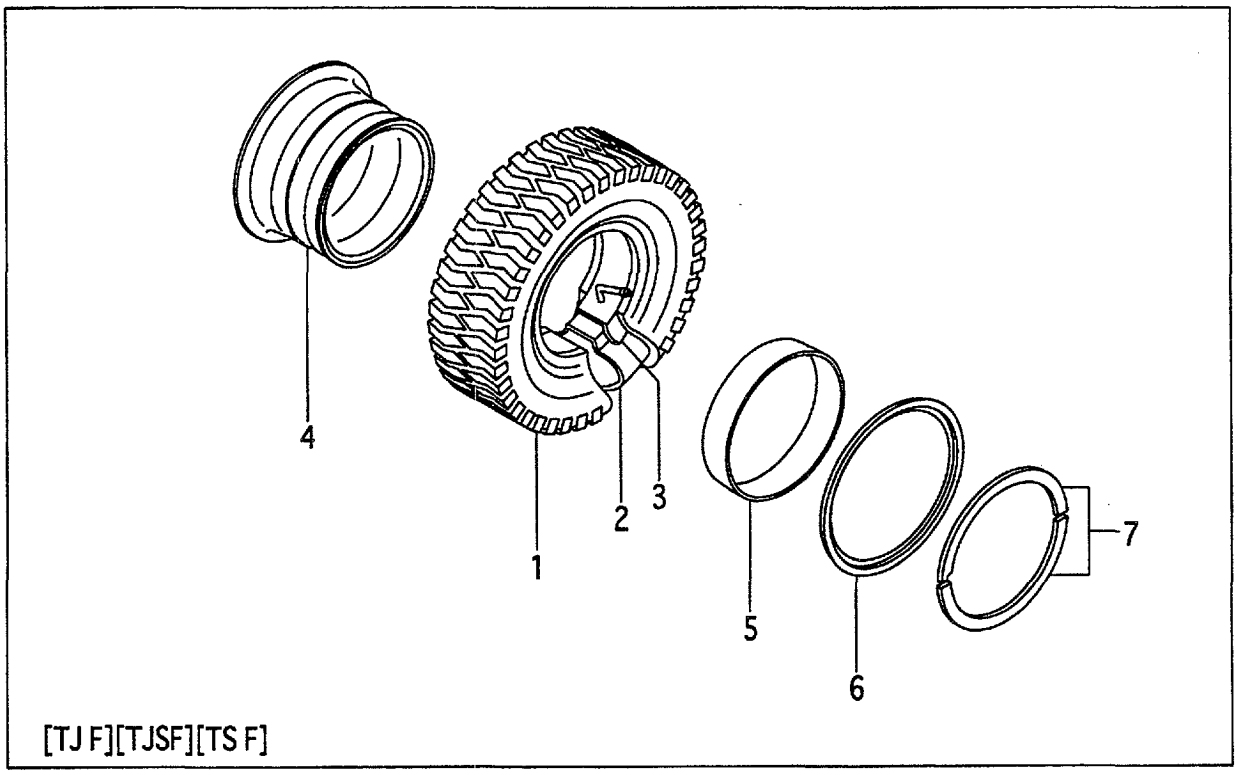

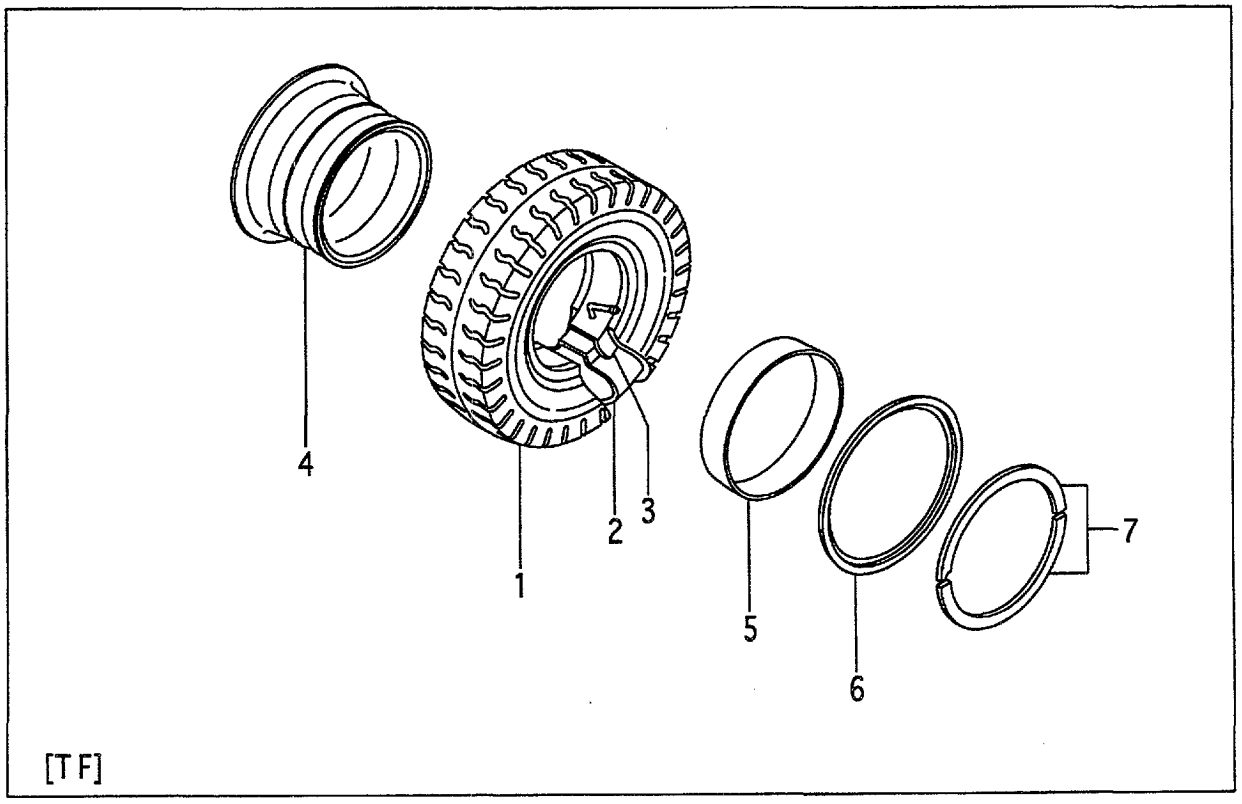

A:FG18C19 FG18T19
B:FD18C19 FD18T19

FIG.76
(F5014460)

Item No	Part No.	Mark	Description		Req'd	Remarks : Serial No.
A1	54276-80401		WHEEL-ASSY,FRONT	ﾌﾛﾝﾄﾎｲｰﾙｱｯｾﾝ	2	[TJ F] INC.1-7
-	54276-80301		WHEEL-ASSY,FRONT	ﾌﾛﾝﾄﾎｲｰﾙｱｯｾﾝ	2	[TJSF] INC.1-7
-	24274-40201		WHEEL-ASSY,FRONT	ﾌﾛﾝﾄﾎｲｰﾙｱｯｾﾝ	2	[T F] INC.1-7
-	54276-80501		WHEEL-ASSY,FRONT	ﾌﾛﾝﾄﾎｲｰﾙｱｯｾﾝ	2	[TS F] INC.1-7
1	06006-65010		TIRE,650-10-10	ﾀｲﾔ	2	[TJ F]
-	06005-65010		TIRE,650-10-10	ﾀｲﾔ	2	[TJSF]
-	06001-65010		TIRE,650-10-10	ﾀｲﾔ	2	[T F]
-	06007-65010		TIRE,650-10-10	ﾀｲﾔ	2	[TS F]
2	06711-65010		TUBE,650-10-10T	ﾁｭｰﾌﾞ	2	[TJ F][TJSF][T F][TS F]
3	06701-65010		FLAP,650-10-10F	ﾌﾗｯﾌﾟ	2	[TJ F][TJSF][T F][TS F]
A2	24274-40501		RIM-ASSY,500F-10	ﾘﾑｱｯｾﾝ	2	[TJ F][TJSF][T F][TS F] INC.4-7
4	NO PART NO.	#	RIM	ﾘﾑ	2	[TJ F][TJSF][T F][TS F]
5	54236-83011		BAND	ﾊﾞﾝﾄﾞ	2	[TJ F][TJSF][T F][TS F]
6	54236-83021		FLANGE,SIDE	ﾌﾗﾝｼﾞ	2	[TJ F][TJSF][T F][TS F]
7	54236-83031		RING,LOCK	ﾘﾝｸﾞ	2	[TJ F][TJSF][T F][TS F]

FIG.77 FRONT WHEEL (1.0T,1.5T):[(TJ F,TJSF,T F,TS F)/DR F]

(F5014470) フロントホイール

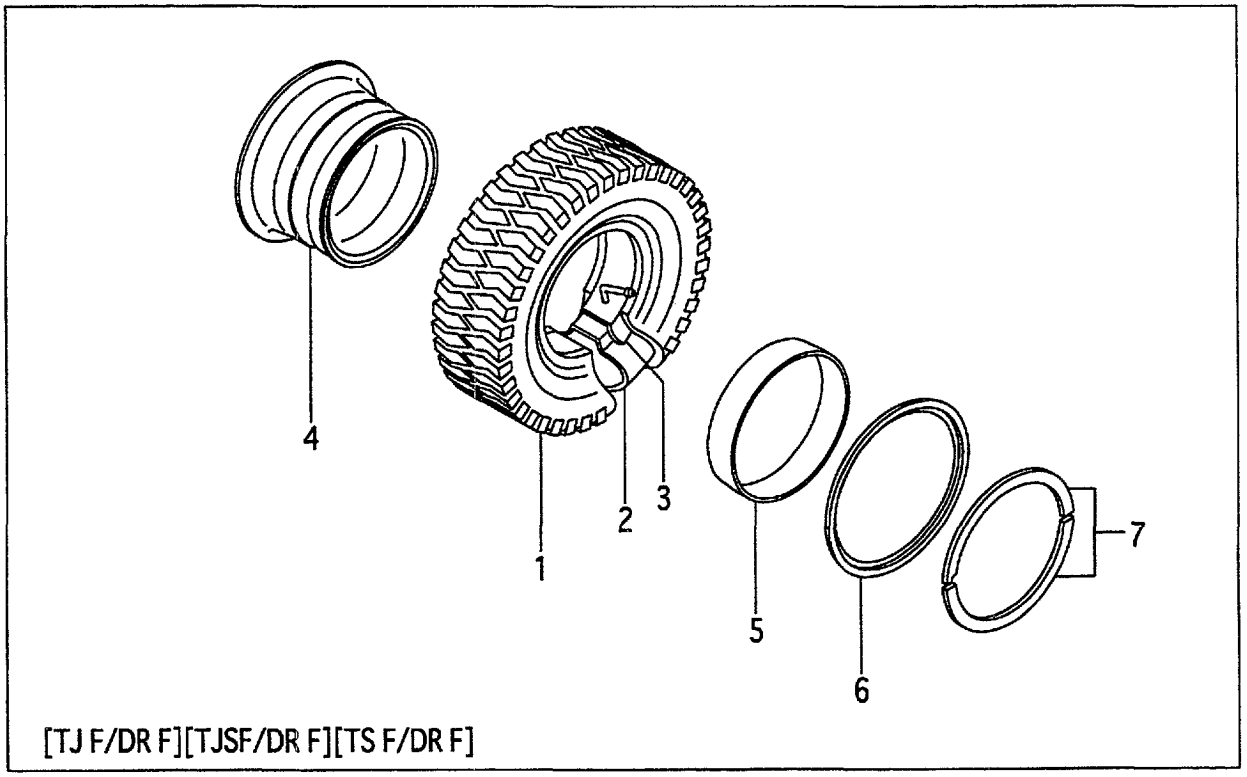

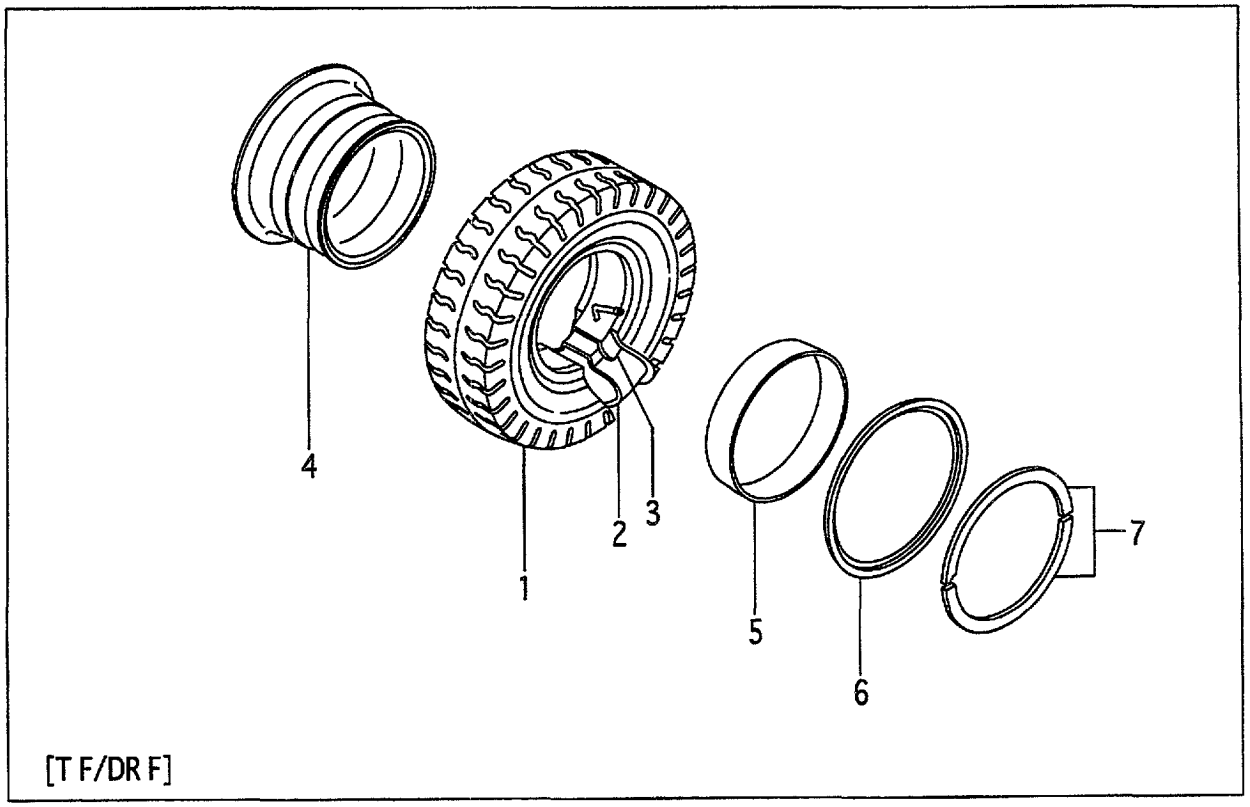

A:FG10C19 FG10T19 C:FD10C19 FD10T19
B:FG15C19 FG15T19 D:FD15C19 FD15T19

Item No	Part No.	Mark	Description		Req'd	Remarks : Serial No.
A1	516B6-80302		WHEEL-ASSY,FRONT	ﾌﾛﾝﾄﾎｲｰﾙｱｯｾﾝ	2	A,C [TJ F/DR F] INC.1-7
-	54236-80141		WHEEL-ASSY,FRONT	ﾌﾛﾝﾄﾎｲｰﾙｱｯｾﾝ	2	B,D [TJ F/DR F] INC.1-7
-	54236-80141		WHEEL-ASSY,FRONT	ﾌﾛﾝﾄﾎｲｰﾙｱｯｾﾝ	2	A,C [TJ F/EX/DR F] INC.1-7
-	54236-80131		WHEEL-ASSY,FRONT	ﾌﾛﾝﾄﾎｲｰﾙｱｯｾﾝ	2	[TJSF/DR F] INC.1-7
-	NO PART NO.		WHEEL-ASSY,FRONT	ﾌﾛﾝﾄﾎｲｰﾙｱｯｾﾝ	2	A,C [T F/DR F] INC.1-7
-	54236-80101		WHEEL-ASSY,FRONT	ﾌﾛﾝﾄﾎｲｰﾙｱｯｾﾝ	2	B,D [T F/DR F] INC.1-7
-	54236-80101		WHEEL-ASSY,FRONT	ﾌﾛﾝﾄﾎｲｰﾙｱｯｾﾝ	2	A,C [T F/EX/DR F] INC.1-7
-	54236-80151		WHEEL-ASSY,FRONT	ﾌﾛﾝﾄﾎｲｰﾙｱｯｾﾝ	2	[TS F/DR F] INC.1-7
1	06009-65010		TIRE,650-10-8	ﾀｲﾔ	2	A,C [TJ F/DR F]
-	06006-65010		TIRE,650-10-10	ﾀｲﾔ	2	B,D [TJ F/DR F]
-	06006-65010		TIRE,650-10-10	ﾀｲﾔ	2	A,C [TJ F/EX/DR F]
-	06005-65010		TIRE,650-10-10	ﾀｲﾔ	2	[TJSF/DR F]
-	06002-65010		TIRE,650-10-8	ﾀｲﾔ	2	A,C [T F/DR F]
-	06001-65010		TIRE,650-10-10	ﾀｲﾔ	2	B,D [T F/DR F]
-	06001-65010		TIRE,650-10-10	ﾀｲﾔ	2	A,C [T F/EX/DR F]
-	06007-65010		TIRE,650-10-10	ﾀｲﾔ	2	[TS F/DR F]
2	06712-65010		TUBE,650-10-10T	ﾁｭｰﾌﾞ	2	A,C [TJ F/DR F][T F/DR F]
-	06711-65010		TUBE,650-10-10T	ﾁｭｰﾌﾞ	2	B,D [TJ F/DR F][T F/DR F]
-	06711-65010		TUBE,650-10-10T	ﾁｭｰﾌﾞ	2	A,C [TJ F/EX/DR F][T F/EX/DR F]
-	06711-65010		TUBE,650-10-10T	ﾁｭｰﾌﾞ	2	[TJSF/DR F][TS F/DR F]
3	06702-65010		FLAP,650-10-10F	ﾌﾗｯﾌﾟ	2	A,C [TJ F/DR F][T F/DR F]
-	06701-65010		FLAP,650-10-10F	ﾌﾗｯﾌﾟ	2	B,D [TJ F/DR F][T F/DR F]
-	06701-65010		FLAP,650-10-10F	ﾌﾗｯﾌﾟ	2	A,C [TJ F/EX/DR F][T F/EX/DR F]
-	06701-65010		FLAP,650-10-10F	ﾌﾗｯﾌﾟ	2	[TJSF/DR F][TS F/DR F]
A2	54236-80181		RIM-ASSY,500F-10	ﾘﾑｱｯｾﾝ	2	[TJ F/DR F][T F/DR F] INC.4-7
-	54236-80181		RIM-ASSY,500F-10	ﾘﾑｱｯｾﾝ	2	[TJSF/DR F][TS F/DR F] INC.4-7
4	NO PART NO.	#	RIM	ﾘﾑ	2	[TJ F/DR F][TJSF/DR F] [T F/DR F][TS F/DR F]
5	54236-83011		BAND	ﾊﾞﾝﾄﾞ	2	[TJ F/DR F][TJSF/DR F] [T F/DR F][TS F/DR F]
6	54236-83021		FLANGE,SIDE	ﾌﾗﾝｼﾞ	2	[TJ F/DR F][TJSF/DR F] [T F/DR F][TS F/DR F]

FIG.77 FRONT WHEEL (1.0T,1.5T):[(TJ F,TJSF,T F,TS F)/DR F]

(F5014470) フロントホイール

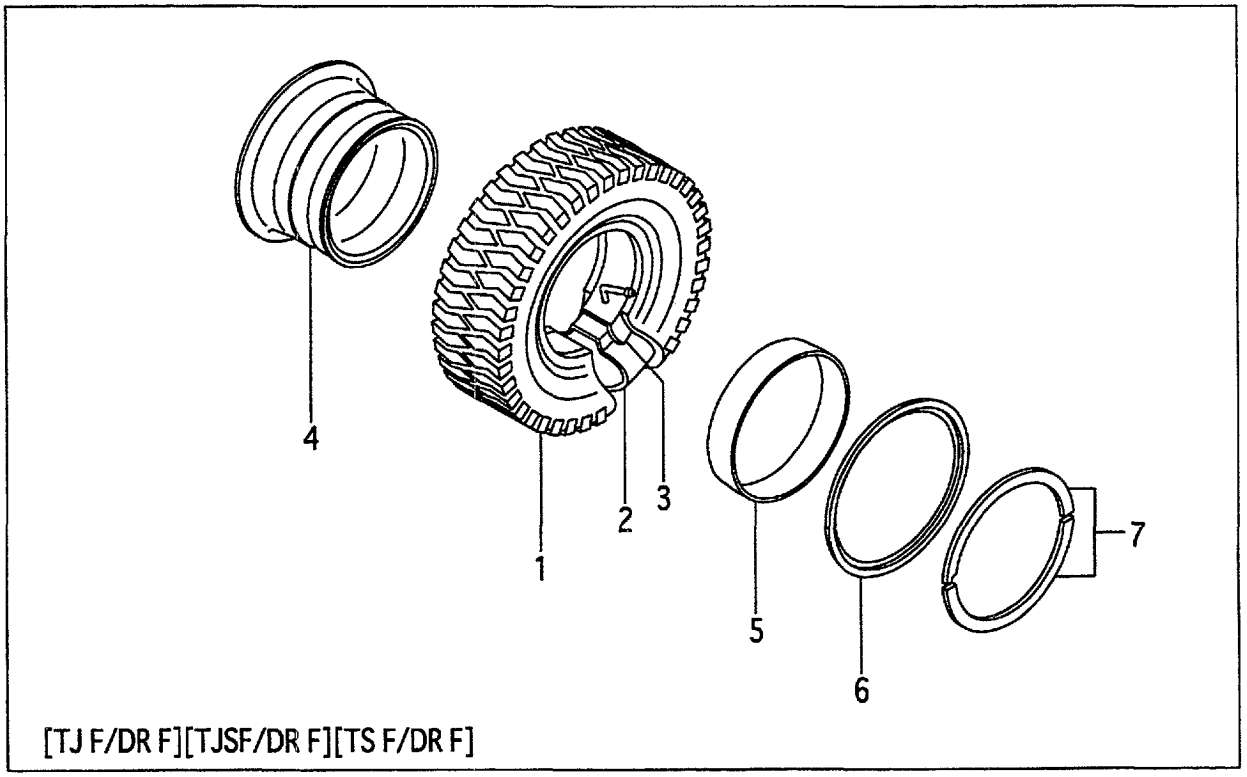

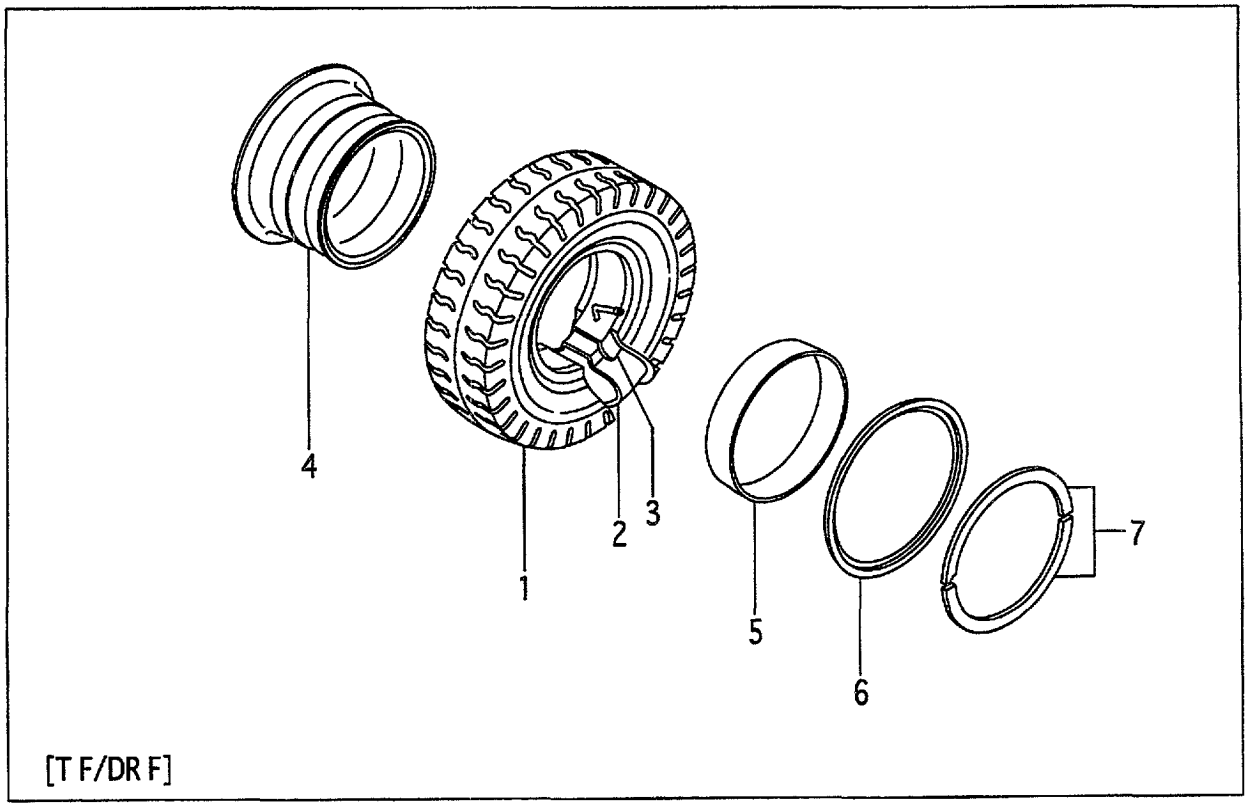

A:FG10C19 FG10T19 C:FD10C19 FD10T19
B:FG15C19 FG15T19 D:FD15C19 FD15T19

Item No	Part No.	Mark	Description	Req'd	Remarks : Serial No.
7	54236-83031		RING,LOCK リング	2	[TJ F/DR F][TJSF/DR F] [T F/DR F][TS F/DR F]

FIG.78 FRONT WHEEL (1.0T,1.5T):[TUJF][TUSF][TUWF][TUGF]

(F5014480) フロントホイール

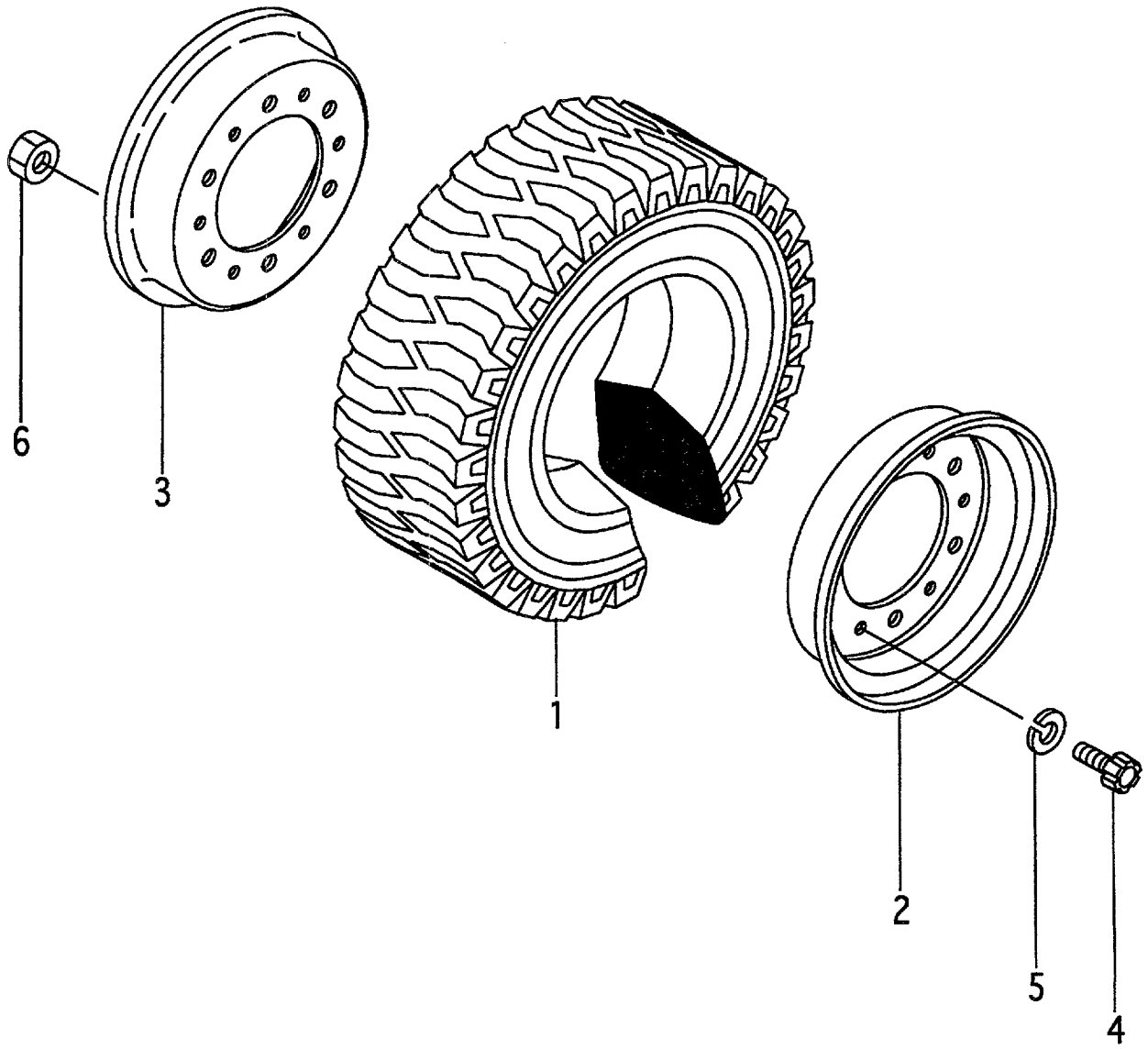

A:FG10C19 FG10T19 FG15C19 FG15T19
B:FD10C19 FD10T19 FD15C19 FD15T19

Item No	Part No.	Mark	Description		Req'd	Remarks : Serial No.
A1	51233-80401		WHEEL-ASSY,FRONT	ﾌﾛﾝﾄﾎｲｰﾙｱｯｾﾝ	2	[TUJF] INC.1-6
-	51236-80221		WHEEL-ASSY,FRONT	ﾌﾛﾝﾄﾎｲｰﾙｱｯｾﾝ	2	[TUSF] INC.1-6
-	51236-80201		WHEEL-ASSY,FRONT	ﾌﾛﾝﾄﾎｲｰﾙｱｯｾﾝ	2	[TUWF] INC.1-6
-	51236-80211		WHEEL-ASSY,FRONT	ﾌﾛﾝﾄﾎｲｰﾙｱｯｾﾝ	2	[TUGF] INC.1-6
1	06802-65010		TIRE,UNIQUE,650-10	ﾀｲﾔ	2	[TUJF]
-	06806-65010		TIRE,UNIQUE,650-10	ﾀｲﾔ	2	[TUJF]
-	06853-65010		TIRE,SOFTONE,650-10	ﾀｲﾔ	2	[TUSF]
-	06841-65010		TIRE,WHITE,650-10	ﾀｲﾔ	2	[TUWF]
-	06843-65010		TIRE,GREEN,650-10	ﾀｲﾔ	2	[TUGF]
A2	22574-40303		RIM-ASSY,500F-10	ﾘﾑｱｯｾﾝ	2	[TUJF][TUSF][TUWF][TUGF] INC.2,3
2	NO PART NO.	#	RIM,OUTSIDE	ﾘﾑ	2	[TUJF][TUSF][TUWF][TUGF]
3	NO PART NO.	#	RIM,INSIDE	ﾘﾑ	2	[TUJF][TUSF][TUWF][TUGF]
4	510F3-82611		BOLT	ﾎﾞﾙﾄ	12	[TUJF][TUSF][TUWF][TUGF]
5	02011-00012		WASHER	ﾜｯｼｬ	12	[TUJF][TUSF][TUWF][TUGF]
6	01402-10012		NUT	ﾅｯﾄ	12	[TUJF][TUSF][TUWF][TUGF]

FIG.79 FRONT WHEEL (1.8T):[TUJF][TUSF][TUWF][TUGF]

(F5014490) フロントホイール

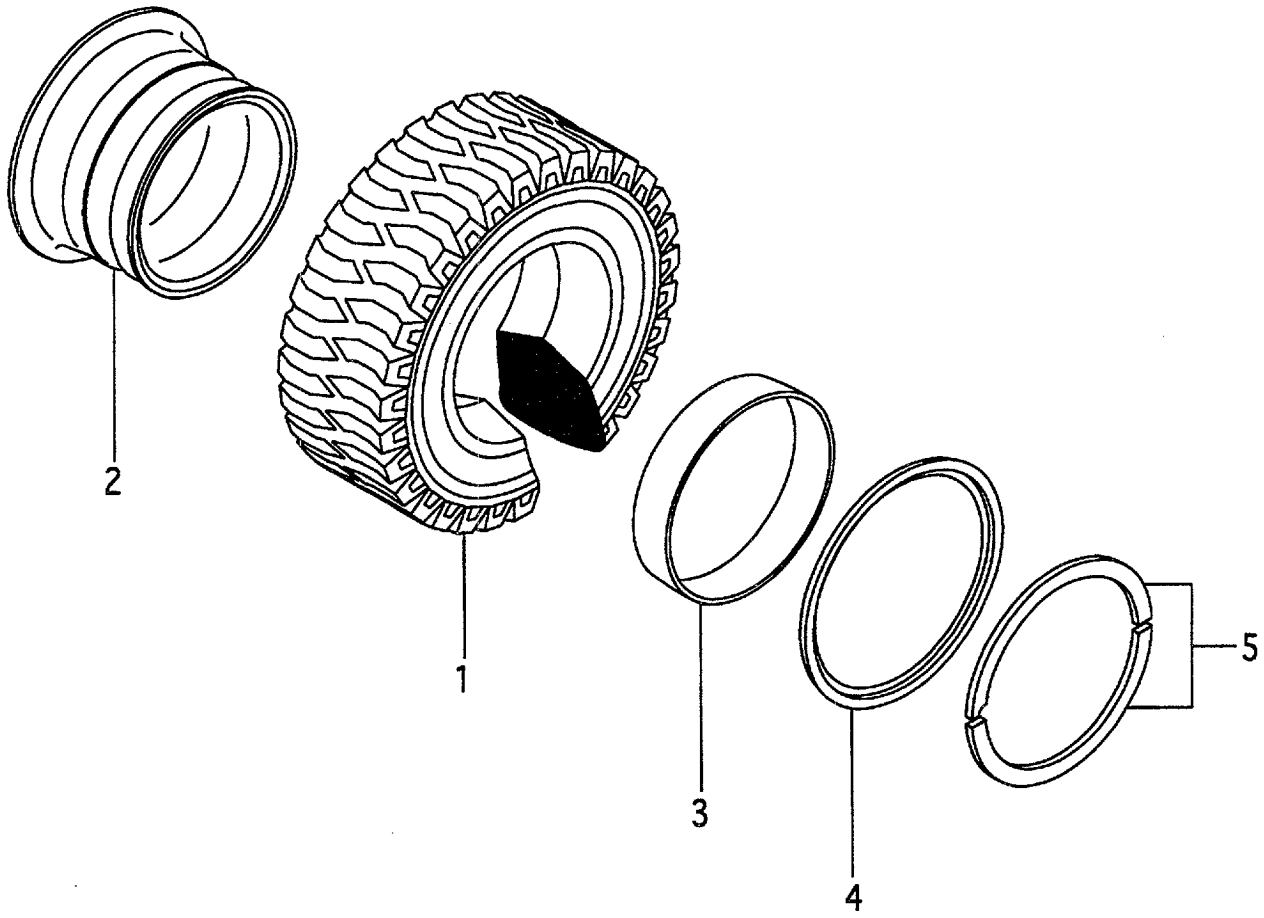

A:FG18C19 FG18T19
B:FD18C19 FD18T19

FIG.79
(F5014490)

Item No	Part No.	Mark	Description		Req'd	Remarks : Serial No.
A1	54276-80201		WHEEL-ASSY,FRONT	ﾌﾛﾝﾄﾎｲｰﾙｱｯｾﾝ	2	[TUJF] INC.1-5
-	51276-80221		WHEEL-ASSY,FRONT	ﾌﾛﾝﾄﾎｲｰﾙｱｯｾﾝ	2	[TUSF] INC.1-5
-	51276-80201		WHEEL-ASSY,FRONT	ﾌﾛﾝﾄﾎｲｰﾙｱｯｾﾝ	2	[TUWF] INC.1-5
-	51276-80211		WHEEL-ASSY,FRONT	ﾌﾛﾝﾄﾎｲｰﾙｱｯｾﾝ	2	[TUGF] INC.1-5
1	06806-65010		TIRE,UNIQUE,650-10	ﾀｲﾔ	2	[TUJF]
-	06805-65010		TIRE,UNIQUE,650-10	ﾀｲﾔ	2	[TUJF]
-	06853-65010		TIRE,SOFTONE,650-10	ﾀｲﾔ	2	[TUSF]
-	06841-65010		TIRE,WHITE,650-10	ﾀｲﾔ	2	[TUWF]
-	06843-65010		TIRE,GREEN,650-10	ﾀｲﾔ	2	[TUGF]
A2	24274-40501		RIM-ASSY,500F-10	ﾘﾑｱｯｾﾝ	2	[TUJF][TUSF][TUWF][TUGF] INC.2-5
2	NO PART NO.	#	RIM	ﾘﾑ	2	[TUJF][TUSF][TUWF][TUGF]
3	54236-83011		BAND	ﾊﾞﾝﾄﾞ	2	[TUJF][TUSF][TUWF][TUGF]
4	54236-83021		FLANGE,SIDE	ﾌﾗﾝｼﾞ	2	[TUJF][TUSF][TUWF][TUGF]
5	54236-83031		RING,LOCK	ﾘﾝｸﾞ	2	[TUJF][TUSF][TUWF][TUGF]

FIG.80 FRONT WHEEL (1.0T,1.5T):[TUJF/DR F]

(F50144A0) フロントホイール

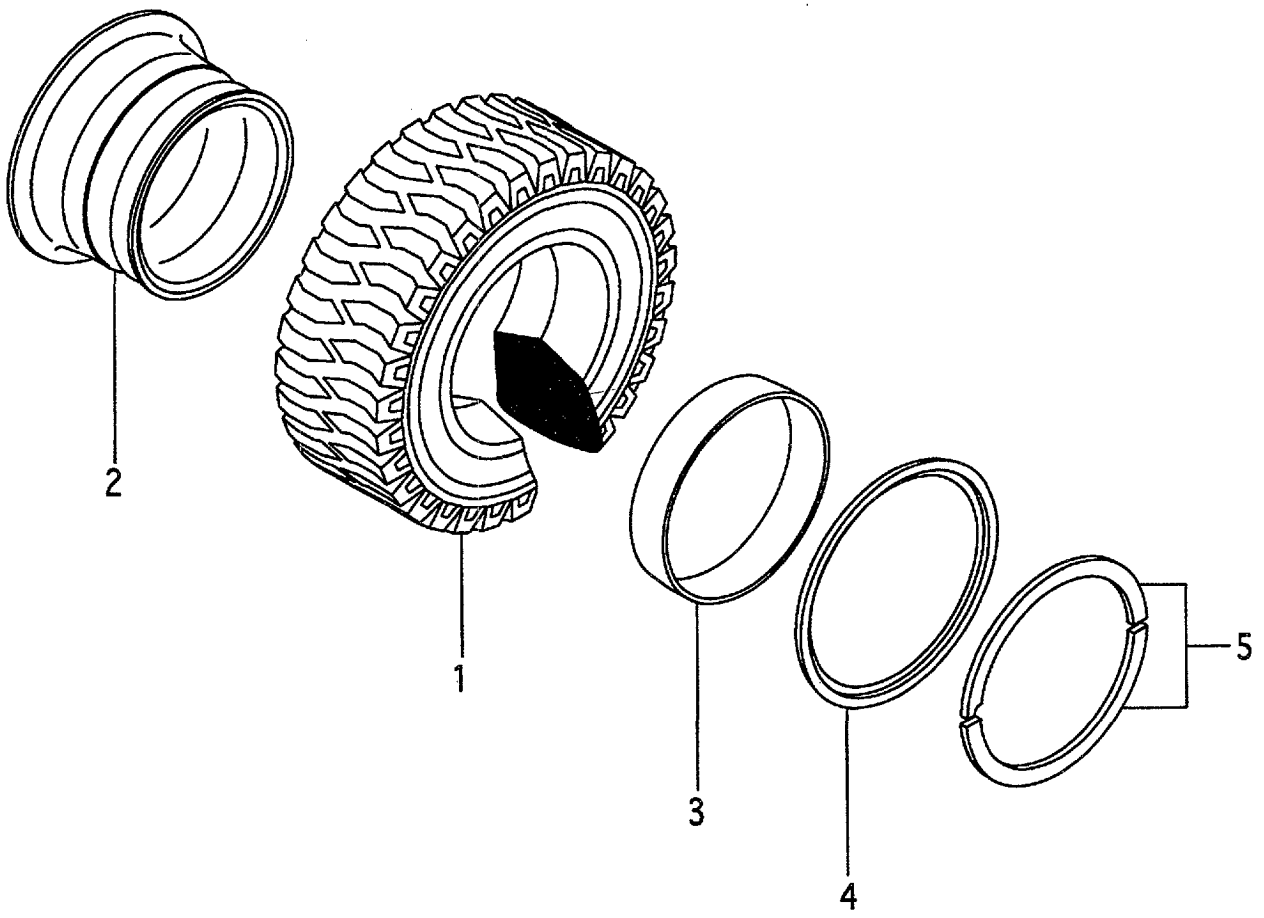

A:FG10C19 FG10T19 FG15C19 FG15T19
B:FD10C19 FD10T19 FD15C19 FD15T19

Item No	Part No.	Mark	Description		Req'd	Remarks : Serial No.
A1	54236-80121		WHEEL-ASSY,FRONT	ﾌﾛﾝﾄﾎｲｰﾙｱｯｾﾝ	2	[TUJF/DR F] INC.1-5
1	06806-65010		TIRE,UNIQUE,650-10	ﾀｲﾔ	2	[TUJF/DR F]
A2	54236-80181		RIM-ASSY,500F-10	ﾘﾑｱｯｾﾝ	2	[TUJF/DR F] INC.2-5
2	NO PART NO.	#	RIM	ﾘﾑ	2	[TUJF/DR F]
3	54236-83011		BAND	ﾊﾞﾝﾄﾞ	2	[TUJF/DR F]
4	54236-83021		FLANGE,SIDE	ﾌﾗﾝｼﾞ	2	[TUJF/DR F]
5	54236-83031		RING,LOCK	ﾘﾝｸﾞ	2	[TUJF/DR F]

FIG.81 FRONT WHEEL (1.0T,1.5T):[TRAF]

(F50144B0) フロントホイール

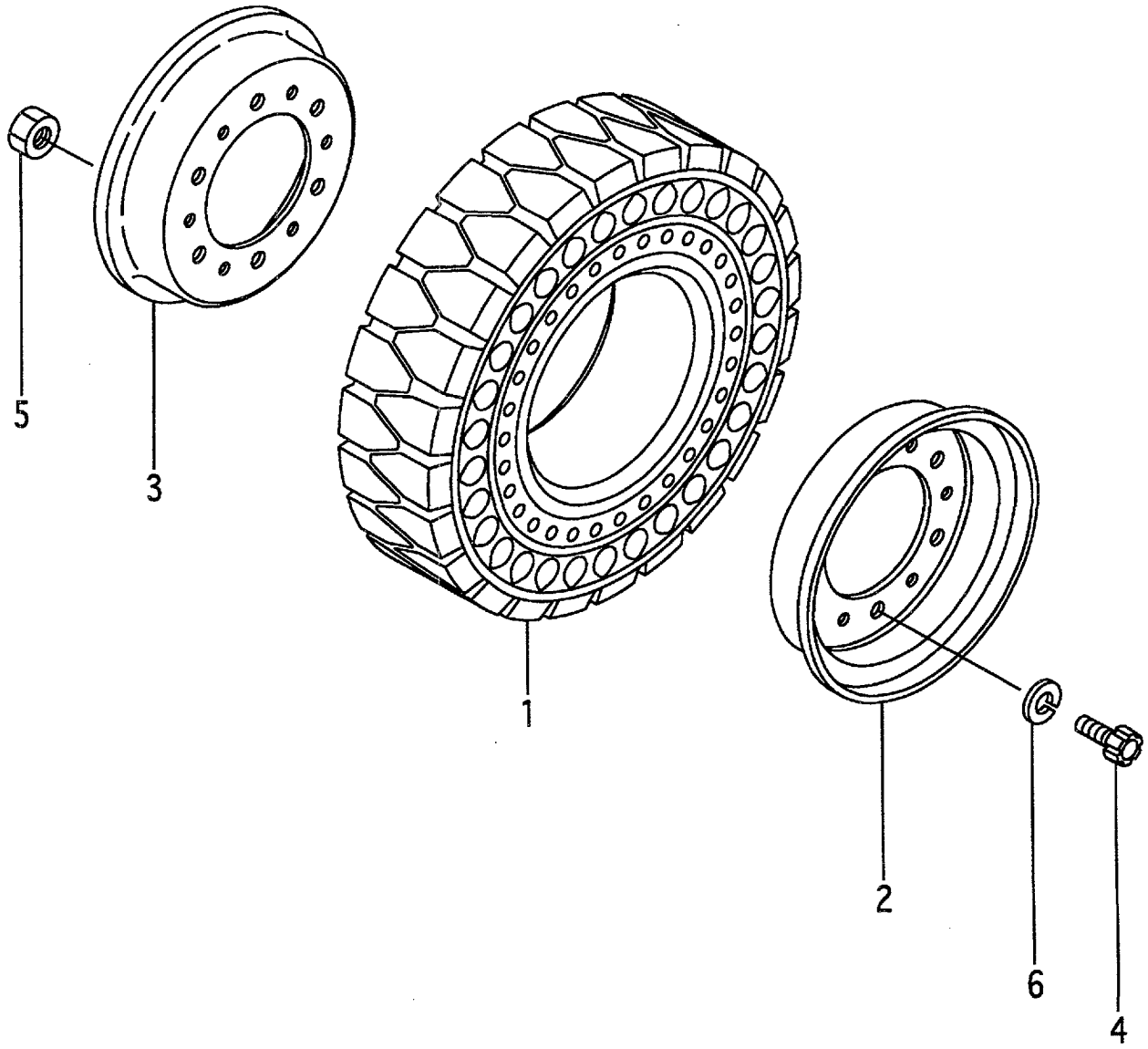

A:FG10C19 FG10T19 FG15C19 FG15T19
B:FD10C19 FD10T19 FD15C19 FD15T19

Item No	Part No.	Mark	Description		Req'd	Remarks : Serial No.
A1	516G6-80171		WHEEL-ASSY,FRONT	ﾌﾛﾝﾄﾎｲｰﾙｱｯｾﾝ	2	[TRAF] INC.1-6
1	516G6-85011		TIRE,AIR-BOSS,650-10	ﾀｲﾔ	2	[TRAF]
A2	22574-40303		RIM-ASSY,500F-10	ﾘﾑｱｯｾﾝ	2	[TRAF] INC.2,3
2	NO PART NO.	#	RIM,OUTSIDE	ﾘﾑ	2	[TRAF]
3	NO PART NO.	#	RIM,INSIDE	ﾘﾑ	2	[TRAF]
4	510F3-82611		BOLT	ﾎﾞﾙﾄ	12	[TRAF]
5	01402-10012		NUT	ﾅｯﾄ	12	[TRAF]
6	02011-00012		WASHER	ﾜｯｼｬ	12	[TRAF]

FIG.82 FRONT WHEEL (1.8T):[TRAF]

(F50144C0) フロントホイール

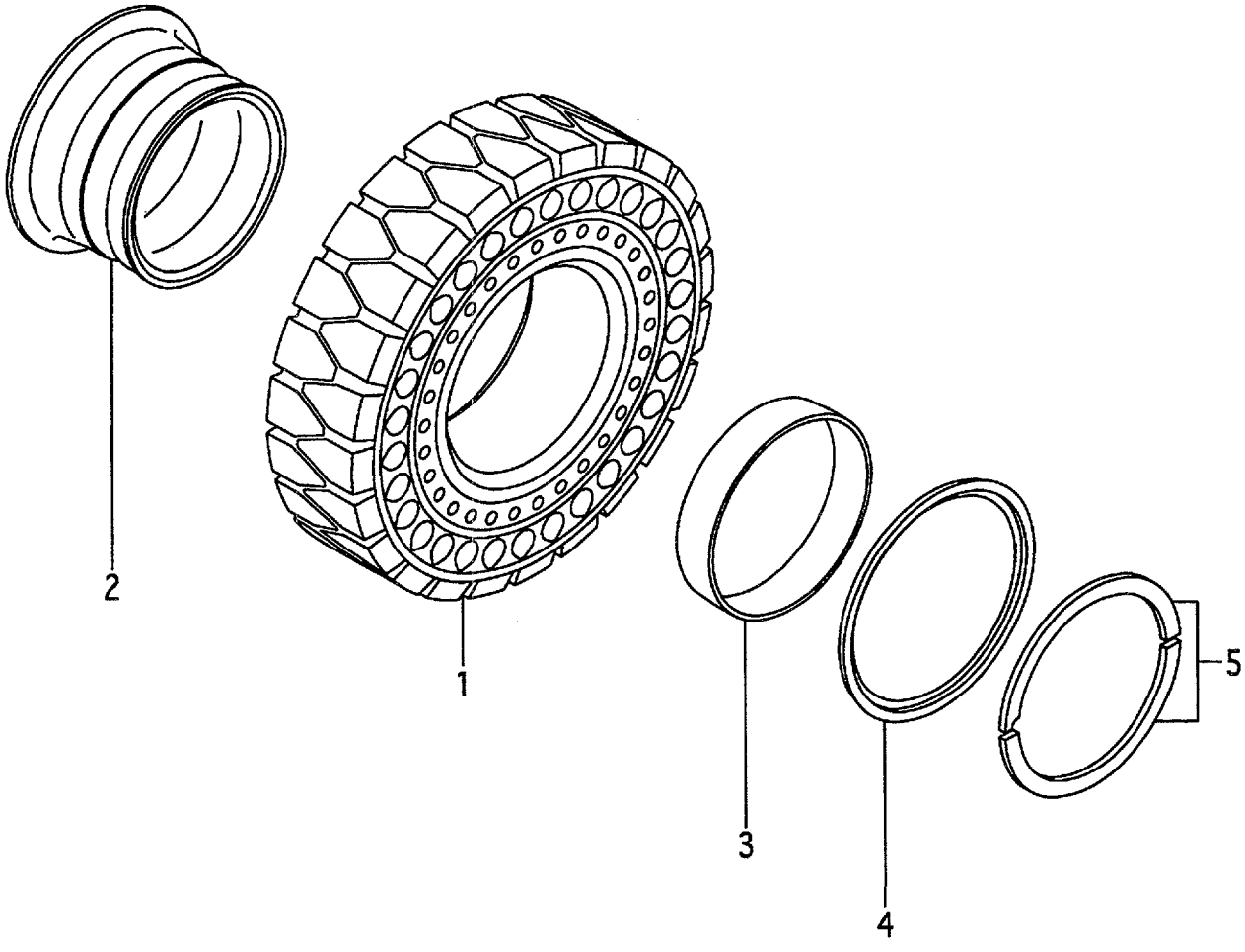

A:FG18C19 FG18T19
B:FD18C19 FD18T19

FIG.82
(F50144C0)

Item No	Part No.	Mark	Description		Req'd	Remarks : Serial No.
A1	516K6-80171		WHEEL-ASSY,FRONT	ﾌﾛﾝﾄﾎｲｰﾙｱｯｾﾝ	2	[TRAF] INC.1-5
1	516G6-85011		TIRE,AIR-BOSS,650-10	ﾀｲﾔ	2	[TRAF]
A2	24274-40501		RIM-ASSY,500F-10	ﾘﾑｱｯｾﾝ	2	[TRAF] INC.2-5
2	NO PART NO.	#	RIM	ﾘﾑ	2	[TRAF]
3	54236-83011		BAND	ﾊﾞﾝﾄﾞ	2	[TRAF]
4	54236-83021		FLANGE,SIDE	ﾌﾗﾝｼﾞ	2	[TRAF]
5	54236-83031		RING,LOCK	ﾘﾝｸﾞ	2	[TRAF]

FIG.83 FRONT WHEEL [TJ W][T W][TS W]

(F50144D0) フロントホイール

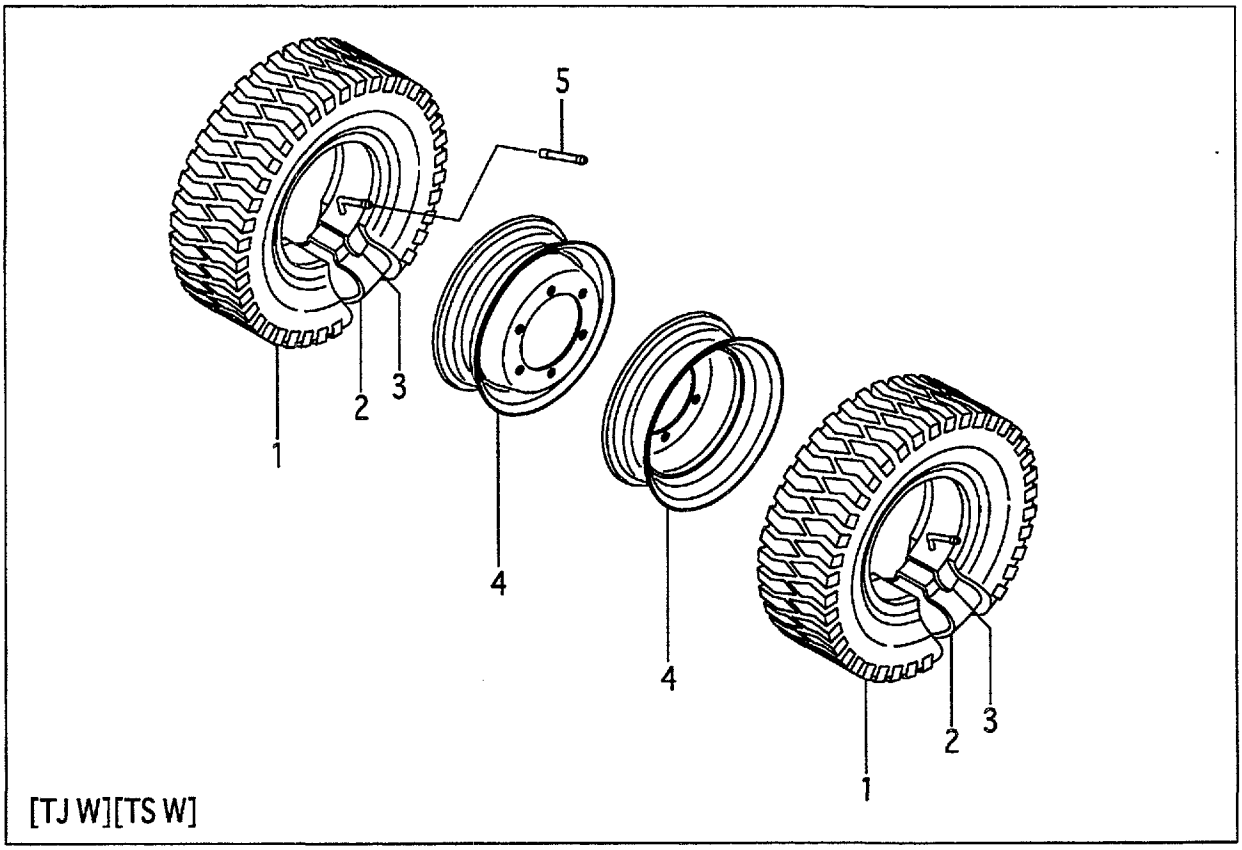

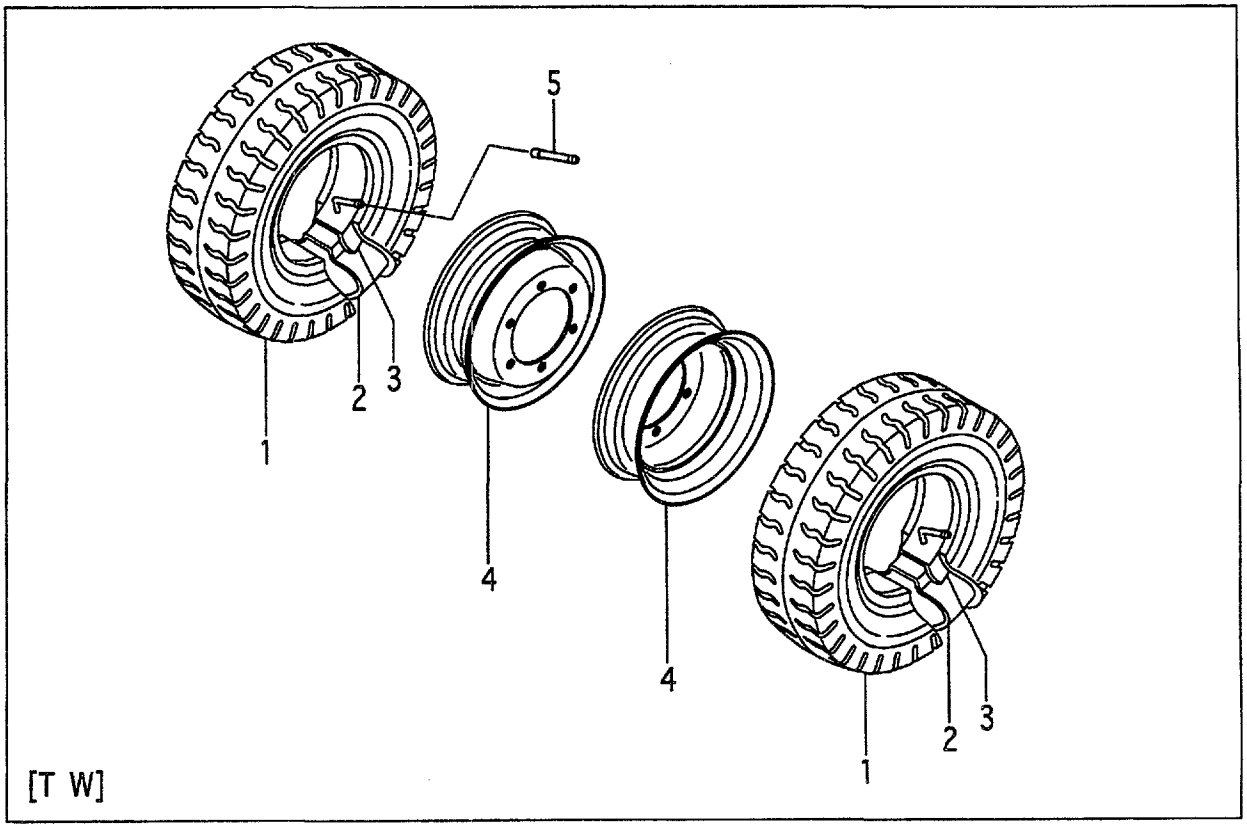

A:FG10C19 FG10T19 D:FD10C19 FD10T19
B:FG15C19 FG15T19 E:FD15C19 FD15T19
C:FG18C19 FG18T19 F:FD18C19 FD18T19

FIG.83
(F50144D0)

Item No	Part No.	Mark	Description		Req'd	Remarks : Serial No.
A1	54236-80251		WHEEL-ASSY,FRONT	ﾌﾛﾝﾄﾎｲｰﾙｱｯｾﾝ	4	[TJ W] INC.1-4
-	52197-40002		WHEEL-ASSY,FRONT	ﾌﾛﾝﾄﾎｲｰﾙｱｯｾﾝ	4	[T W] INC.1-4
-	518G7-40701		WHEEL-ASSY,FRONT	ﾌﾛﾝﾄﾎｲｰﾙｱｯｾﾝ	4	[TS W] INC.1-4
1	06002-45012		TIRE,450-12-8	ﾀｲﾔ	4	[TJ W]
-	06001-45012		TIRE,450-12-8	ﾀｲﾔ	4	[T W]
-	06007-45012		TIRE,450-12-8	ﾀｲﾔ	4	[TS W]
2	06711-45012		TUBE,450-12-8T	ﾁｭｰﾌﾞ	4	[TJ W][T W][TS W]
3	06701-45012		FLAP,450-12-8F	ﾌﾗｯﾌﾟ	4	[TJ W][T W][TS W]
4	52197-42001		RIM,350D-12	ﾘﾑ	4	[TJ W][T W][TS W]
5	06731-00070		VALVE,EXTENSION	ﾊﾞﾙﾌﾞ	2	[TJ W][T W][TS W]

FIG.84 FRONT WHEEL [TUJW][TUSW][TUWW][TUGW]

(F50144E0) フロントホイール

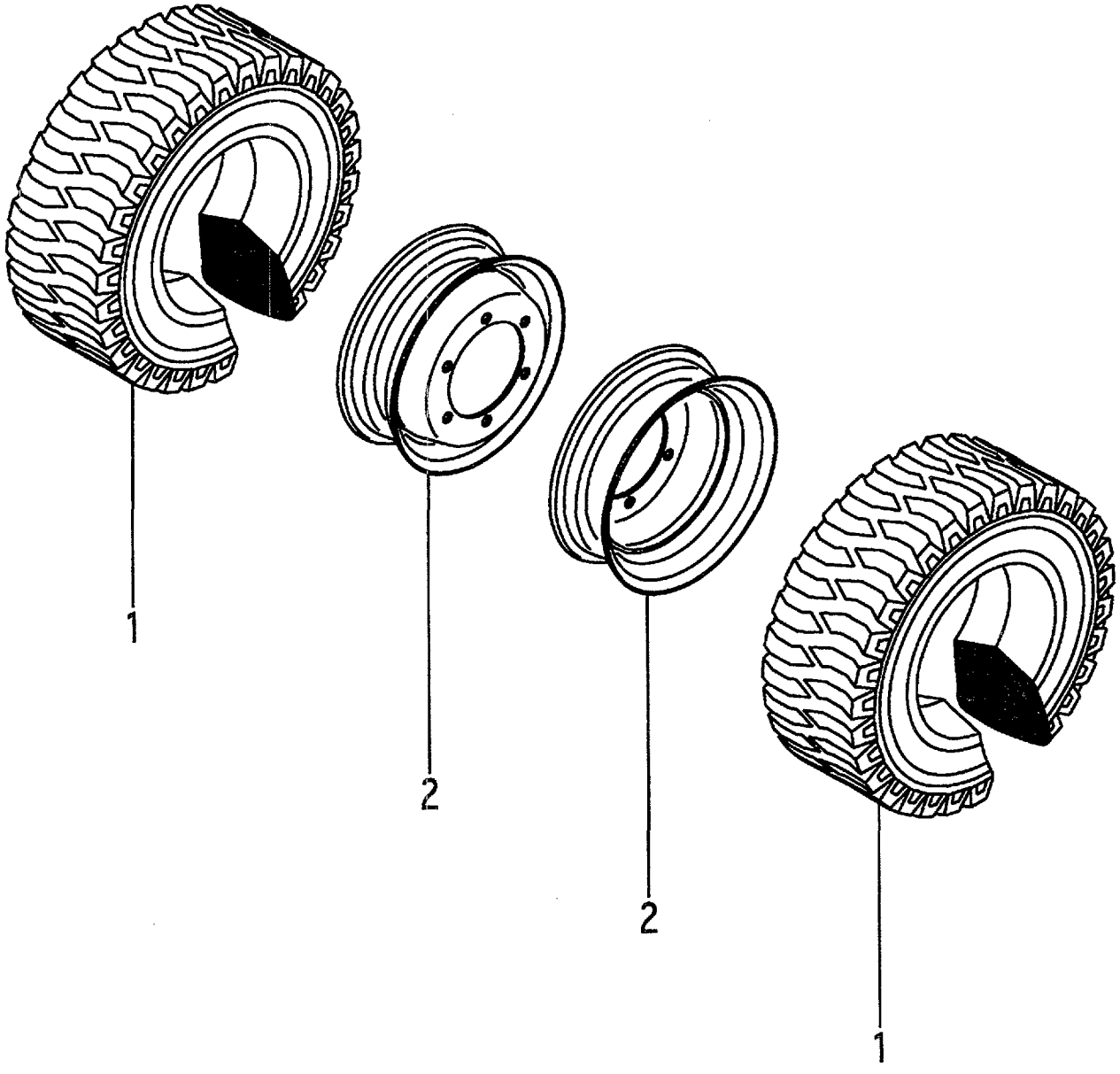

A:FG10C19 FG10T19 FG15C19 FG15T19 FG18C19 FG18T19
B:FD10C19 FD10T19 FD15C19 FD15T19 FD18C19 FD18T19

Item No	Part No.	Mark	Description		Req'd	Remarks : Serial No.
A1	54236-80201		WHEEL-ASSY,FRONT	ﾌﾛﾝﾄﾎｲｰﾙｱｯｾﾝ	4	[TUJW] INC.1,2
-	51236-80321		WHEEL-ASSY,FRONT	ﾌﾛﾝﾄﾎｲｰﾙｱｯｾﾝ	4	[TUSW] INC.1,2
-	51236-80301		WHEEL-ASSY,FRONT	ﾌﾛﾝﾄﾎｲｰﾙｱｯｾﾝ	4	[TUWW] INC.1,2
-	51236-80311		WHEEL-ASSY,FRONT	ﾌﾛﾝﾄﾎｲｰﾙｱｯｾﾝ	4	[TUGW] INC.1,2
1	06806-45012		TIRE,UNIQUE,450-12	ﾀｲﾔ	4	[TUJW]
-	06851-45012		TIRE,SOFTONE,450-12	ﾀｲﾔ	4	[TUSW]
-	06841-45012		TIRE,WHITE,450-12	ﾀｲﾔ	4	[TUWW]
-	06843-45012		TIRE,GREEN,450-12	ﾀｲﾔ	4	[TUGW]
2	52577-52001		RIM,300D-12	ﾘﾑ	4	[TUJW][TUSW][TUWW][TUGW]

FIG.85 FRONT WHEEL [TJ W65][TJSW65][T W65][TS W65]

(F50144F0) フロントホイール

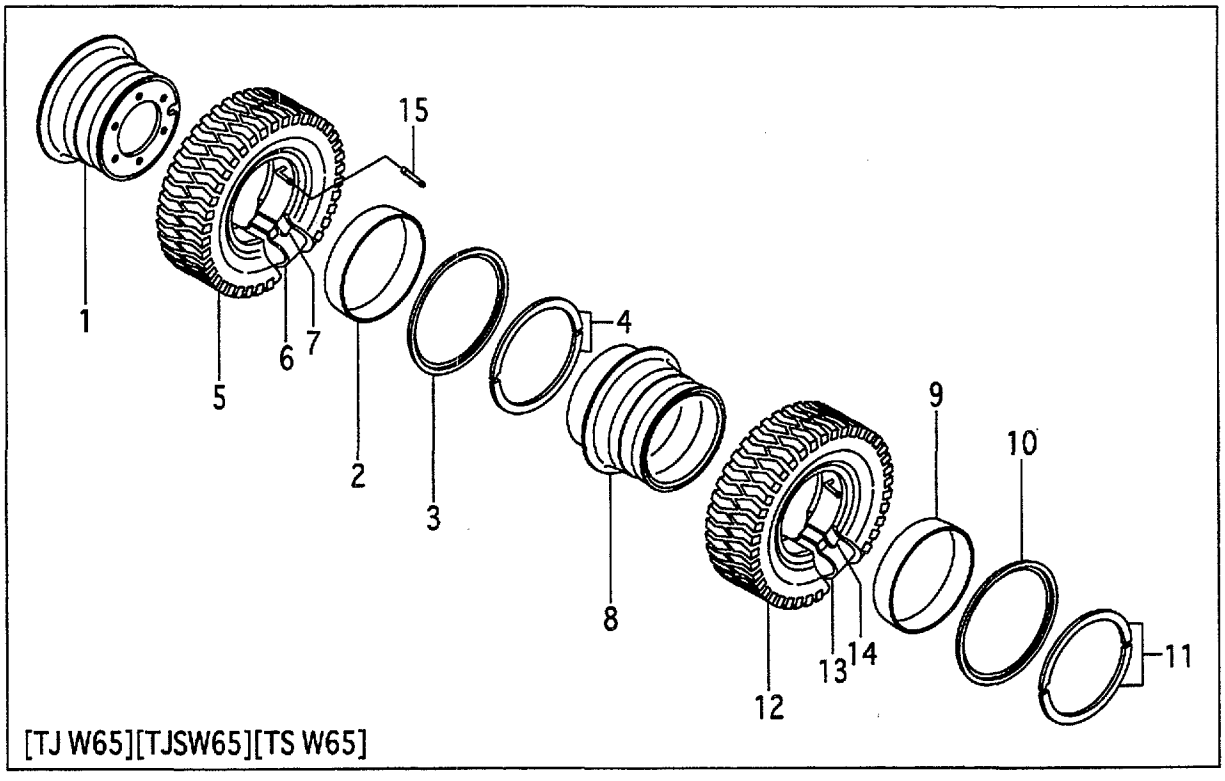

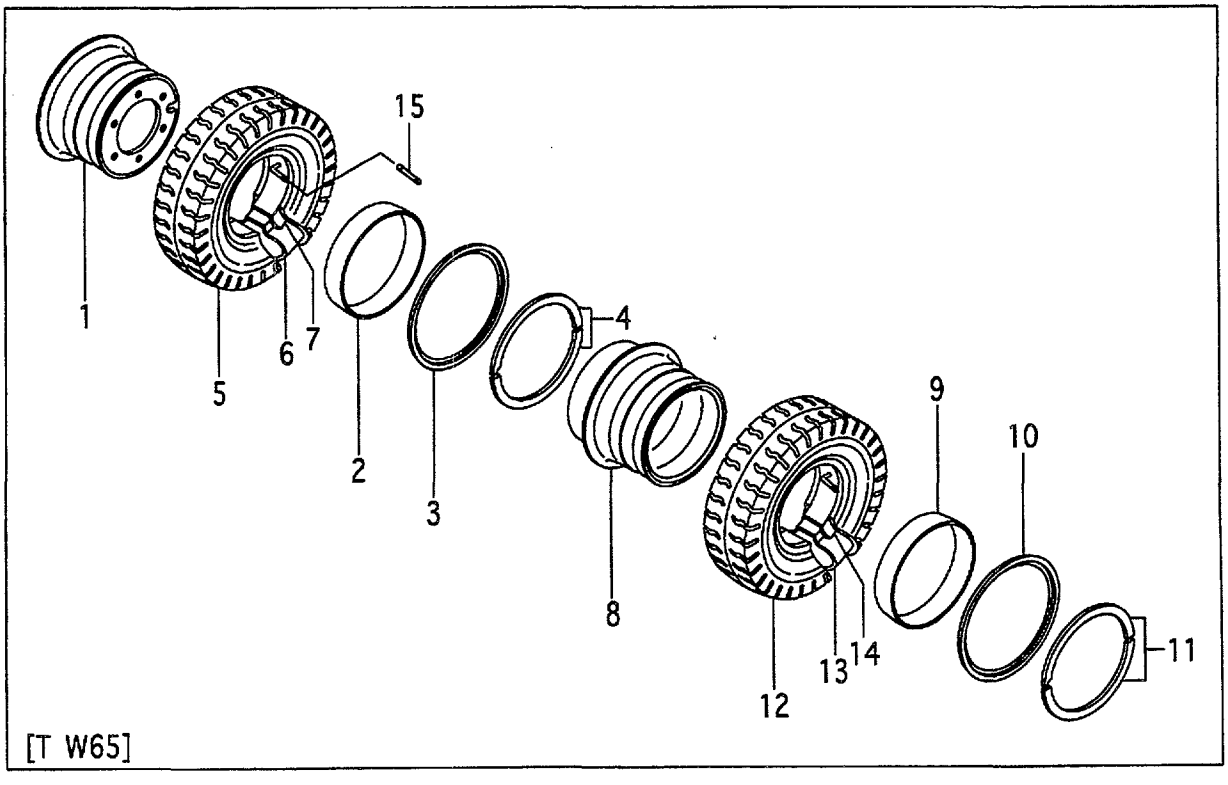

A:FG10C19 FG10T19 FG15C19 FG15T19 FG18C19 FG18T19
B:FD10C19 FD10T19 FD15C19 FD15T19 FD18C19 FD18T19

Item No	Part No.	Mark	Description		Req'd	Remarks : Serial No.
A1	54236-80701		WHEEL-ASSY,FRONT	ﾌﾛﾝﾄﾎｲｰﾙｱｯｾﾝ	2	[TJ W65] INC.1-7
-	54236-80601		WHEEL-ASSY,FRONT	ﾌﾛﾝﾄﾎｲｰﾙｱｯｾﾝ	2	[TJSW65] INC.1-7
-	54236-80301		WHEEL-ASSY,FRONT	ﾌﾛﾝﾄﾎｲｰﾙｱｯｾﾝ	2	[T W65] INC.1-7
-	54236-80801		WHEEL-ASSY,FRONT	ﾌﾛﾝﾄﾎｲｰﾙｱｯｾﾝ	2	[TS W65] INC.1-7
A2	54236-81001		RIM-ASSY,500F-10	ﾘﾑｱｯｾﾝ	2	[TJ W65][TJSW65][T W65] [TS W65] INC.1-4
1	NO PART NO.	#	RIM	ﾘﾑ	2	[TJ W65][TJSW65][T W65] [TS W65]
2	54236-83011		BAND	ﾊﾞﾝﾄﾞ	2	[TJ W65][TJSW65][T W65] [TS W65]
3	54236-83021		FLANGE,SIDE	ﾌﾗﾝｼﾞ	2	[TJ W65][TJSW65][T W65] [TS W65]
4	54236-83031		RING,LOCK	ﾘﾝｸﾞ	2	[TJ W65][TJSW65][T W65] [TS W65]
5	06006-65010		TIRE,650-10-10	ﾀｲﾔ	2	[TJ W65]
-	06005-65010		TIRE,650-10-10	ﾀｲﾔ	2	[TJSW65]
-	06001-65010		TIRE,650-10-10	ﾀｲﾔ	2	[T W65]
-	06007-65010		TIRE,650-10-10	ﾀｲﾔ	2	[TS W65]
6	06711-65010		TUBE,650-10-10T	ﾁｭｰﾌﾞ	2	[TJ W65][TJSW65][T W65] [TS W65]
7	06701-65010		FLAP,650-10-10F	ﾌﾗｯﾌﾟ	2	[TJ W65][TJSW65][T W65] [TS W65]
A3	54236-80711		WHEEL-ASSY,FRONT	ﾌﾛﾝﾄﾎｲｰﾙｱｯｾﾝ	2	[TJ W65] INC.8-14
-	54236-80611		WHEEL-ASSY,FRONT	ﾌﾛﾝﾄﾎｲｰﾙｱｯｾﾝ	2	[TJSW65] INC.8-14
-	54236-80311		WHEEL-ASSY,FRONT	ﾌﾛﾝﾄﾎｲｰﾙｱｯｾﾝ	2	[T W65] INC.8-14
-	54236-80811		WHEEL-ASSY,FRONT	ﾌﾛﾝﾄﾎｲｰﾙｱｯｾﾝ	2	[TS W65] INC.8-14
A4	54236-81011		RIM-ASSY,500F-10	ﾘﾑｱｯｾﾝ	2	[TJ W65][TJSW65][T W65] [TS W65] INC.8-11
8	NO PART NO.	#	RIM	ﾘﾑ	2	[TJ W65][TJSW65][T W65] [TS W65]
9	54236-83011		BAND	ﾊﾞﾝﾄﾞ	2	[TJ W65][TJSW65][T W65] [TS W65]
10	54236-83021		FLANGE,SIDE	ﾌﾗﾝｼﾞ	2	[TJ W65][TJSW65][T W65] [TS W65]
11	54236-83031		RING,LOCK	ﾘﾝｸﾞ	2	[TJ W65][TJSW65][T W65] [TS W65]
12	06006-65010		TIRE,650-10-10	ﾀｲﾔ	2	[TJ W65]
-	06005-65010		TIRE,650-10-10	ﾀｲﾔ	2	[TJSW65]
-	06001-65010		TIRE,650-10-10	ﾀｲﾔ	2	[T W65]
-	06007-65010		TIRE,650-10-10	ﾀｲﾔ	2	[TS W65]
13	06711-65010		TUBE,650-10-10T	ﾁｭｰﾌﾞ	2	[TJ W65][TJSW65][T W65] [TS W65]
14	06701-65010		FLAP,650-10-10F	ﾌﾗｯﾌﾟ	2	[TJ W65][TJSW65][T W65] [TS W65]
15	06731-00120		TUBE,EXTENSION	ﾁｭｰﾌﾞ	2	[TJ W65][TJSW65][T W65] [TS W65]

FIG.86 FRONT WHEEL [TUJW65][TUSW65][TUWW65][TUGW65]

(F50144G0) フロントホイール

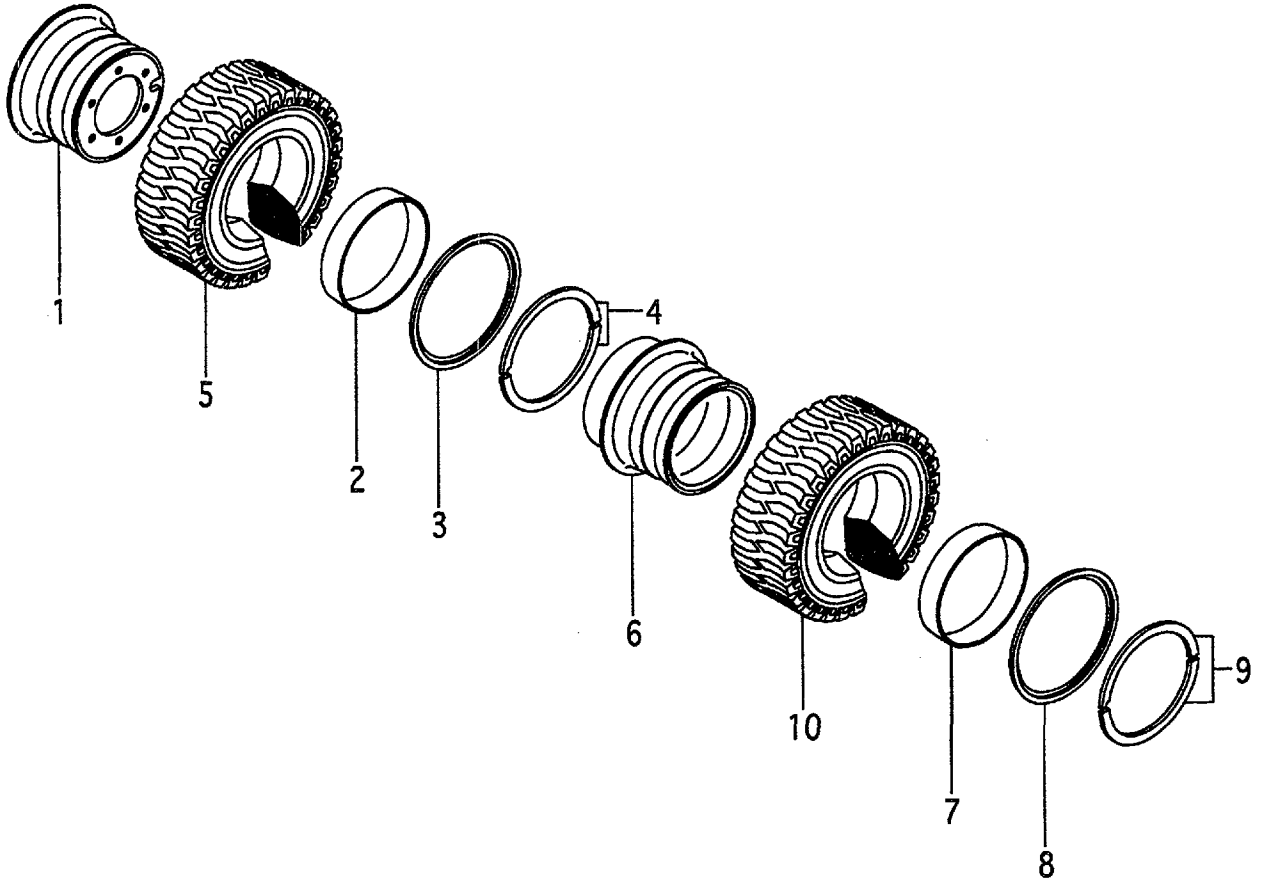

A:FG10C19 FG10T19 FG15C19 FG15T19 FG18C19 FG18T19
B:FD10C19 FD10T19 FD15C19 FD15T19 FD18C19 FD18T19

Item No	Part No.	Mark	Description		Req'd	Remarks : Serial No.
A1	54236-80501		WHEEL-ASSY,FRONT	ﾌﾛﾝﾄﾎｲｰﾙｱｯｾﾝ	2	[TUJW65] INC.1-5
-	51236-80441		WHEEL-ASSY,FRONT	ﾌﾛﾝﾄﾎｲｰﾙｱｯｾﾝ	2	[TUSW65] INC.1-5
-	51236-80401		WHEEL-ASSY,FRONT	ﾌﾛﾝﾄﾎｲｰﾙｱｯｾﾝ	2	[TUWW65] INC.1-5
-	51236-80421		WHEEL-ASSY,FRONT	ﾌﾛﾝﾄﾎｲｰﾙｱｯｾﾝ	2	[TUGW65] INC.1-5
A2	54236-81001		RIM-ASSY,500F-10	ﾘﾑｱｯｾﾝ	2	[TUJW65][TUSW65][TUWW65] [TUGW65] INC.1-4
1	NO PART NO.	#	RIM	ﾘﾑ	2	[TUJW65][TUSW65][TUWW65] [TUGW65]
2	54236-83011		BAND	ﾊﾞﾝﾄﾞ	2	[TUJW65][TUSW65][TUWW65] [TUGW65]
3	54236-83021		FLANGE,SIDE	ﾌﾗﾝｼﾞ	2	[TUJW65][TUSW65][TUWW65] [TUGW65]
4	54236-83031		RING,LOCK	ﾘﾝｸﾞ	2	[TUJW65][TUSW65][TUWW65] [TUGW65]
5	06806-65010		TIRE,UNIQUE,650-10	ﾀｲﾔ	2	[TUJW65]
-	06853-65010		TIRE,SOFTONE,650-10	ﾀｲﾔ	2	[TUSW65]
-	06841-65010		TIRE,WHITE,650-10	ﾀｲﾔ	2	[TUWW65]
-	06843-65010		TIRE,GREEN,650-10	ﾀｲﾔ	2	[TUGW65]
A3	54236-80511		WHEEL-ASSY,FRONT	ﾌﾛﾝﾄﾎｲｰﾙｱｯｾﾝ	2	[TUJW65] INC.6-10
-	51236-80451		WHEEL-ASSY,FRONT	ﾌﾛﾝﾄﾎｲｰﾙｱｯｾﾝ	2	[TUSW65] INC.6-10
-	51236-80411		WHEEL-ASSY,FRONT	ﾌﾛﾝﾄﾎｲｰﾙｱｯｾﾝ	2	[TUWW65] INC.6-10
-	51236-80431		WHEEL-ASSY,FRONT	ﾌﾛﾝﾄﾎｲｰﾙｱｯｾﾝ	2	[TUGW65] INC.6-10
A4	54236-81011		RIM-ASSY,500F-10	ﾘﾑｱｯｾﾝ	2	[TUJW65][TUSW65][TUWW65] [TUGW65] INC.6-9
6	NO PART NO.	#	RIM	ﾘﾑ	2	[TUJW65][TUSW65][TUWW65] [TUGW65]
7	54236-83011		BAND	ﾊﾞﾝﾄﾞ	2	[TUJW65][TUSW65][TUWW65] [TUGW65]
8	54236-83021		FLANGE,SIDE	ﾌﾗﾝｼﾞ	2	[TUJW65][TUSW65][TUWW65] [TUGW65]
9	54236-83031		RING,LOCK	ﾘﾝｸﾞ	2	[TUJW65][TUSW65][TUWW65] [TUGW65]
10	06806-65010		TIRE,UNIQUE,650-10	ﾀｲﾔ	2	[TUJW65]
-	06853-65010		TIRE,SOFTONE,650-10	ﾀｲﾔ	2	[TUSW65]
-	06841-65010		TIRE,WHITE,650-10	ﾀｲﾔ	2	[TUWW65]
-	06843-65010		TIRE,GREEN,650-10	ﾀｲﾔ	2	[TUGW65]

FIG.87 REAR WHEEL

(F50144H0) リヤーホイール

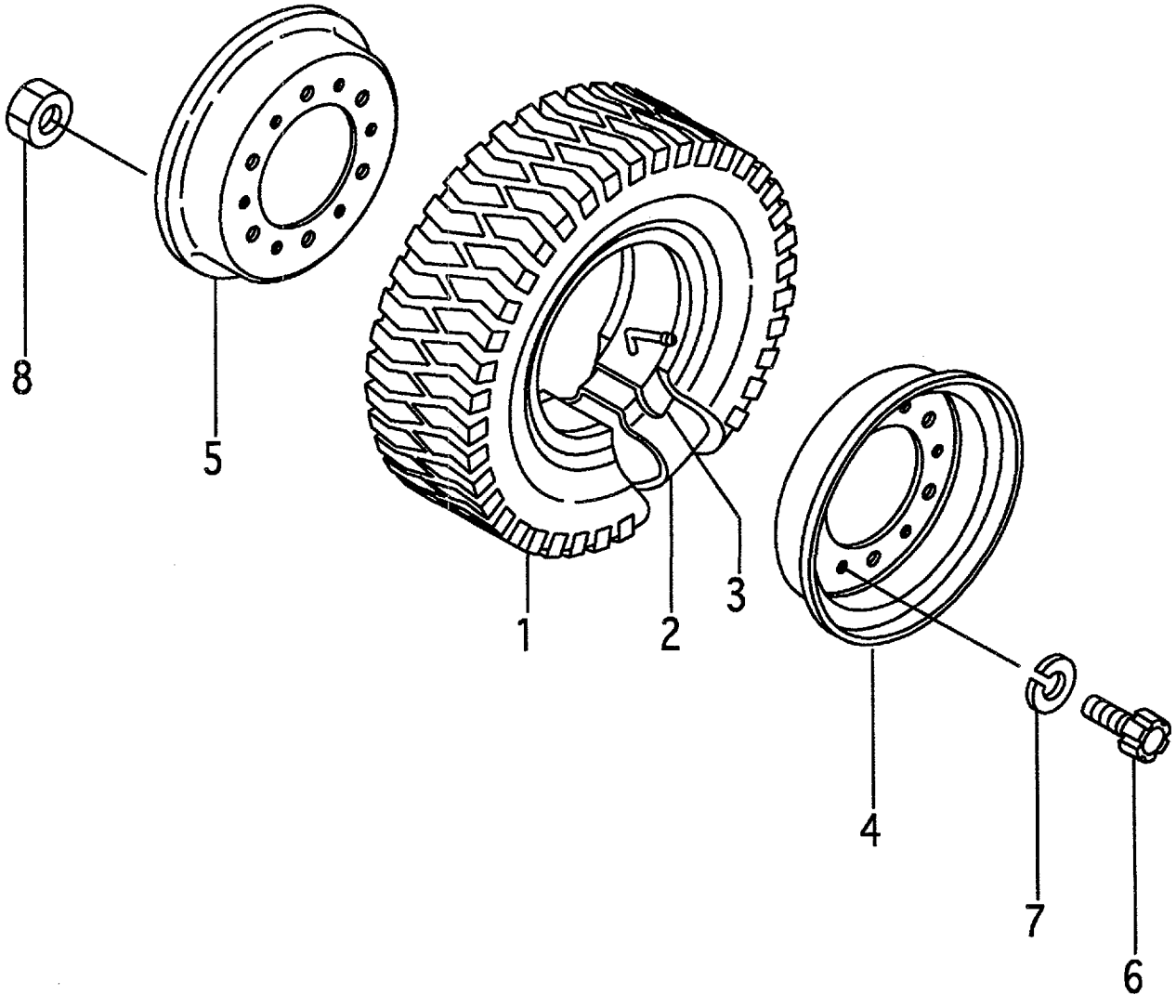

A:FG10C19 FG10T19 D:FD10C19 FD10T19
B:FG15C19 FG15T19 E:FD15C19 FD15T19
C:FG18C19 FG18T19 F:FD18C19 FD18T19

FIG.87
(F50144H0)

Item No	Part No.	Mark	Description		Req'd	Remarks : Serial No.
A1	54236-81201		WHEEL-ASSY,REAR	ﾘﾔｰﾎｲｰﾙｱｯｾﾝ	2	INC.1-8
1	06006-50008		TIRE,500-8-8	ﾀｲﾔ	2	
2	06711-50008		TUBE,500-8-8T	ﾁｭｰﾌﾞ	2	
3	06701-50008		FLAP,500-8-8F	ﾌﾗｯﾌﾟ	2	
A2	52516-80302		RIM-ASSY,300D-8	ﾘﾑｱｯｾﾝ	2	INC.4,5
4	NO PART NO.	#	RIM,OUTSIDE	ﾘﾑ	2	
5	NO PART NO.	#	RIM,INSIDE	ﾘﾑ	2	
6	514A3-82611		BOLT	ﾎﾞﾙﾄ	12	
7	02011-00012		WASHER	ﾜｯｼｬ	12	
8	01400-10012		NUT	ﾅｯﾄ	12	

FIG.88 REAR WHEEL [DR R]

(F50144J0) リヤーホイール

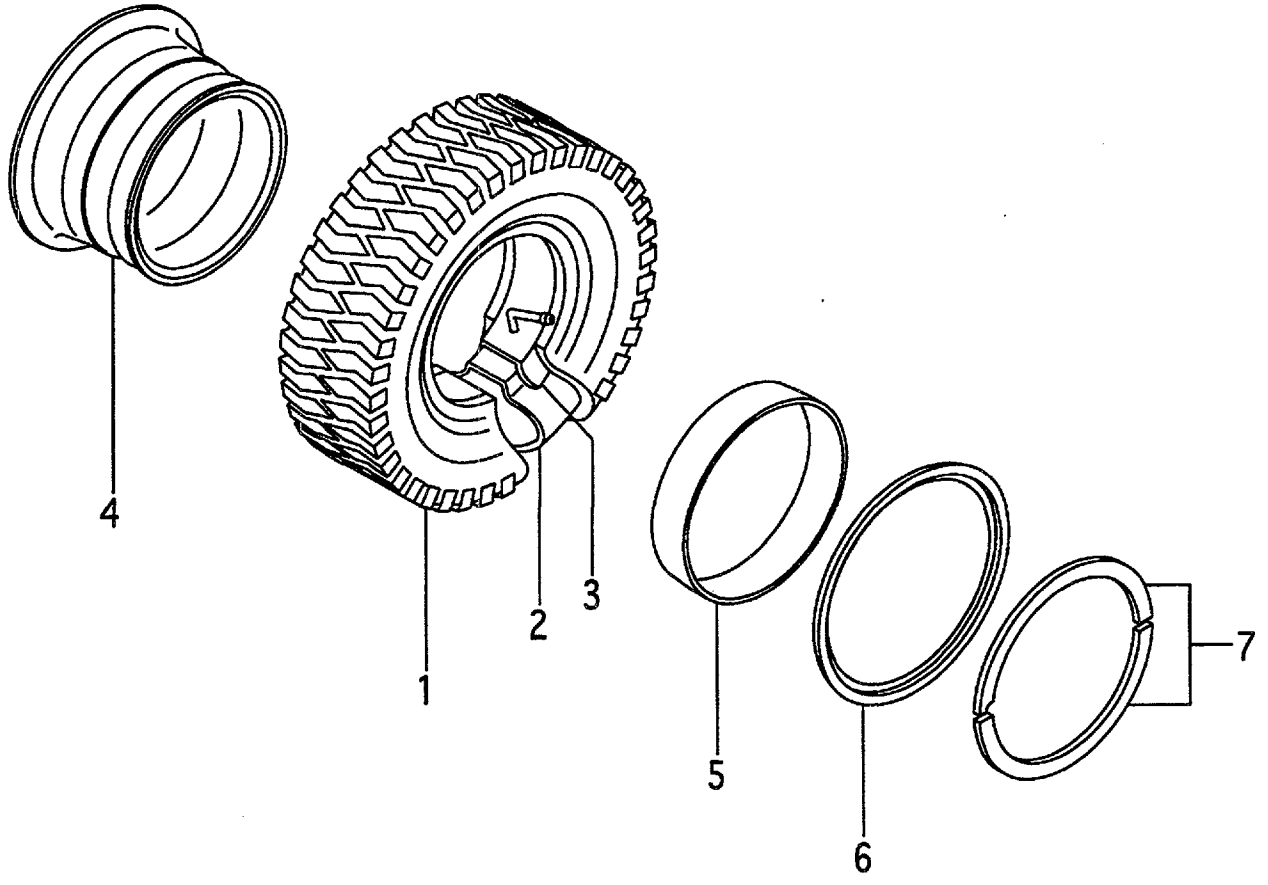

A:FG10C19 FG10T19 FG15C19 FG15T19 FG18C19 FG18T19
B:FD10C19 FD10T19 FD15C19 FD15T19 FD18C19 FD18T19

Item No	Part No.	Mark	Description		Req'd	Remarks : Serial No.
A1	54236-81541		WHEEL-ASSY,REAR	ﾘﾔｰﾎｲｰﾙｱｯｾﾝ	2	[DR R] INC.1-7
1	06006-50008		TIRE,500-8-8	ﾀｲﾔ	2	[DR R]
2	06711-50008		TUBE,500-8-8T	ﾁｭｰﾌﾞ	2	[DR R]
3	06701-50008		FLAP,500-8-8F	ﾌﾗｯﾌﾟ	2	[DR R]
A2	54236-81601		RIM-ASSY,300D-8	ﾘﾑｱｯｾﾝ	2	[DR R] INC.4-7
4	NO PART NO.	#	RIM	ﾘﾑ	2	[DR R]
5	54236-83081		FLANGE,SIDE	ﾌﾗﾝｼﾞ	2	[DR R]
6	54236-83091		RING,LOCK	ﾘﾝｸﾞ	2	[DR R]
7	54236-83101		BAND	ﾊﾞﾝﾄﾞ	2	[DR R]

FIG.89 REAR WHEEL [TJ R][TJSR][T R][TS R]

(F50144K0) リヤーホイール

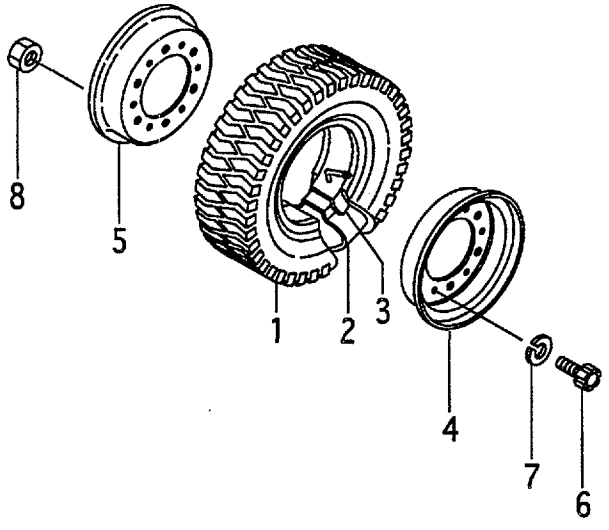

[TJ R][TJSR][TS R]

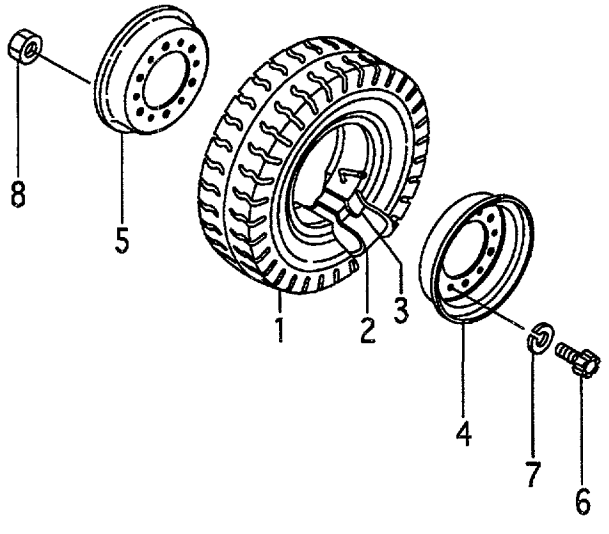

[T R]

A:FG10C19 FG10T19 FG15C19 FG15T19 FG18C19 FG18T19
B:FD10C19 FD10T19 FD15C19 FD15T19 FD18C19 FD18T19

Item No	Part No.	Mark	Description		Req'd	Remarks : Serial No.
A1	54236-81201		WHEEL-ASSY,REAR	ﾘﾔｰﾎｲｰﾙｱｯｾﾝ	2	[TJ R] INC.1-8
-	54236-81101		WHEEL-ASSY,REAR	ﾘﾔｰﾎｲｰﾙｱｯｾﾝ	2	[TJSR] INC.1-8
-	24234-40201		WHEEL-ASSY,REAR	ﾘﾔｰﾎｲｰﾙｱｯｾﾝ	2	[T R] INC.1-8
-	54236-81301		WHEEL-ASSY,REAR	ﾘﾔｰﾎｲｰﾙｱｯｾﾝ	2	[TS R] INC.1-8
1	06006-50008		TIRE,500-8-8	ﾀｲﾔ	2	[TJ R]
-	06005-50008		TIRE,500-8-8	ﾀｲﾔ	2	[TJSR]
-	06001-50008		TIRE,500-8-8	ﾀｲﾔ	2	[T R]
-	06007-50008		TIRE,500-8-8	ﾀｲﾔ	2	[TS R]
2	06711-50008		TUBE,500-8-8T	ﾁｭｰﾌﾞ	2	[TJ R][TJSR][T R][TS R]
3	06701-50008		FLAP,500-8-8F	ﾌﾗｯﾌﾟ	2	[TJ R][TJSR][T R][TS R]
A2	52516-80302		RIM-ASSY,300D-8	ﾘﾑｱｯｾﾝ	2	[TJ R][TJSR][T R][TS R] INC.4-8
4	NO PART NO.	#	RIM,OUTSIDE	ﾘﾑ	2	[TJ R][TJSR][T R][TS R]
5	NO PART NO.	#	RIM,INSIDE	ﾘﾑ	2	[TJ R][TJSR][T R][TS R]
6	514A3-82611		BOLT	ﾎﾞﾙﾄ	12	[TJ R][TJSR][T R][TS R]
7	02011-00012		WASHER	ﾜｯｼｬ	12	[TJ R][TJSR][T R][TS R]
8	01400-10012		NUT	ﾅｯﾄ	12	[TJ R][TJSR][T R][TS R]

FIG.90 REAR WHEEL [(TJ R,TJSR,T R,TS R)/DR R]

(F50144L0) リヤーホイール

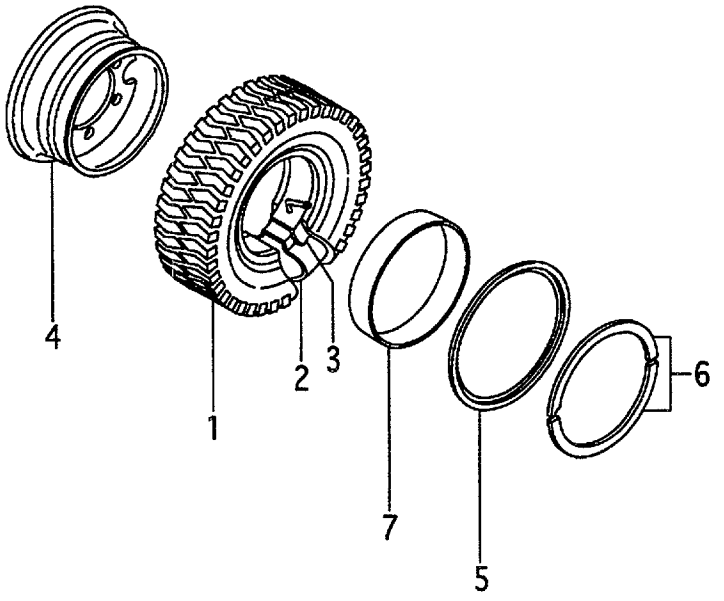

[TJ R/DR R][TJSR/DR R][TS R/DR R]

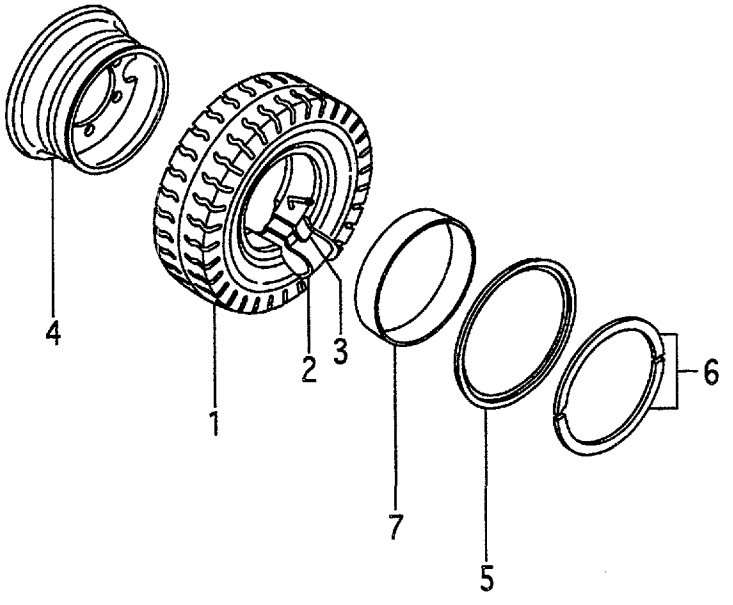

[T R/DR R]

A:FG10C19 FG10T19 D:FD10C19 FD10T19
B:FG15C19 FG15T19 E:FD15C19 FD15T19
C:FG18C19 FG18T19 F:FD18C19 FD18T19

FIG.90
(F50144L0)

Item No	Part No.	Mark	Description		Req'd	Remarks : Serial No.
A1	54236-81541		WHEEL-ASSY,REAR	ﾘﾔｰﾎｲｰﾙｱｯｾﾝ	2	[TJ R/DR R] INC.1-7
-	54236-81531		WHEEL-ASSY,REAR	ﾘﾔｰﾎｲｰﾙｱｯｾﾝ	2	[TJSR/DR R] INC.1-7
-	54236-81501		WHEEL-ASSY,REAR	ﾘﾔｰﾎｲｰﾙｱｯｾﾝ	2	[T R/DR R] INC.1-7
-	54236-81551		WHEEL-ASSY,REAR	ﾘﾔｰﾎｲｰﾙｱｯｾﾝ	2	[TS R/DR R] INC.1-7
1	06006-50008		TIRE,500-8-8	ﾀｲﾔ	2	[TJ R/DR R]
-	06005-50008		TIRE,500-8-8	ﾀｲﾔ	2	[TJSR/DR R]
-	06001-50008		TIRE,500-8-8	ﾀｲﾔ	2	[T R/DR R]
-	06007-50008		TIRE,500-8-8	ﾀｲﾔ	2	[TS R/DR R]
2	06711-50008		TUBE,500-8-8T	ﾁｭｰﾌﾞ	2	[TJ R/DR R][TJSR/DR R]
						[T R/DR R][TS R/DR R]
3	06701-50008		FLAP,500-8-8F	ﾌﾗｯﾌﾟ	2	[TJ R/DR R][TJSR/DR R]
						[T R/DR R][TS R/DR R]
A2	54236-81601		RIM-ASSY,300D-8	ﾘﾑｱｯｾﾝ	2	[TJ R/DR R][TJSR/DR R] INC.4-7
-	54236-81601		RIM-ASSY,300D-8	ﾘﾑｱｯｾﾝ	2	[T R/DR R][TS R/DR R] INC.4-7
4	NO PART NO.	#	RIM	ﾘﾑ	2	[TJ R/DR R][TJSR/DR R]
						[T R/DR R][TS R/DR R]
5	54236-83081		FLANGE,SIDE	ﾌﾗﾝｼﾞ	2	[TJ R/DR R][TJSR/DR R]
						[T R/DR R][TS R/DR R]
6	54236-83091		RING,LOCK	ﾘﾝｸﾞ	2	[TJ R/DR R][TJSR/DR R]
						[T R/DR R][TS R/DR R]
7	54236-83101		BAND	ﾊﾞﾝﾄﾞ	2	[TJ R/DR R][TJSR/DR R]
						[T R/DR R][TS R/DR R]

FIG.91 REAR WHEEL [TUJR][TUSR][TUWR][TUGR]

(F50144M0) リヤーホイール

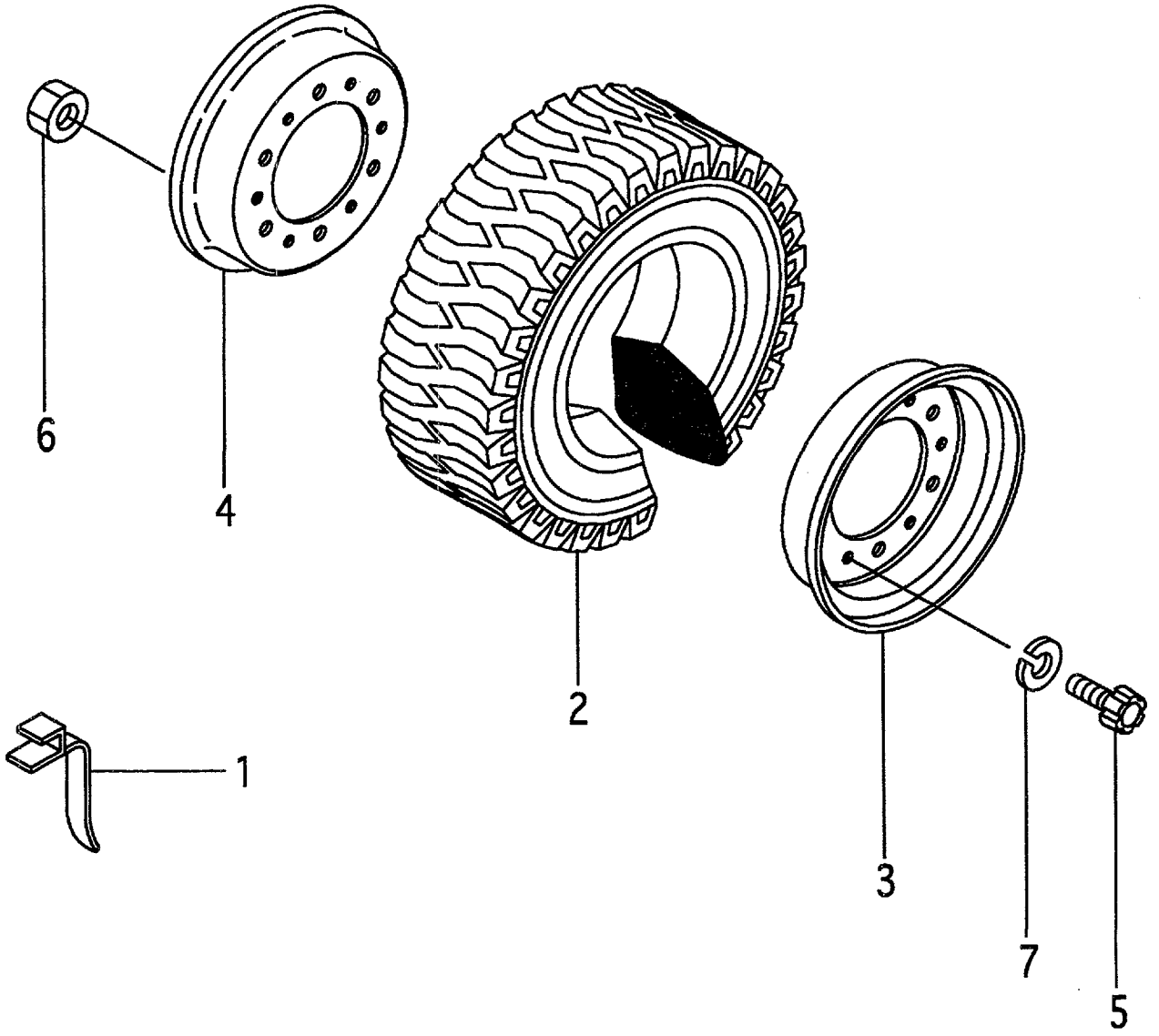

A:FG10C19 FG10T19 D:FD10C19 FD10T19
B:FG15C19 FG15T19 E:FD15C19 FD15T19
C:FG18C19 FG18T19 F:FD18C19 FD18T19

FIG.91
(F50144M0)

Item No	Part No.	Mark	Description		Req'd	Remarks : Serial No.
1	571A6-82081		BELT,EARTH	ﾍﾞﾙﾄ	1	[TUWR][TUGR]
A1	51233-80451		WHEEL-ASSY,REAR	ﾘﾔｰﾎｲｰﾙｱｯｾﾝ	2	[TUJR] INC.2-7
-	51236-80521		WHEEL-ASSY,REAR	ﾘﾔｰﾎｲｰﾙｱｯｾﾝ	2	[TUSR] INC.2-7
-	51236-80501		WHEEL-ASSY,REAR	ﾘﾔｰﾎｲｰﾙｱｯｾﾝ	2	[TUWR] INC.2-7
-	51236-80511		WHEEL-ASSY,REAR	ﾘﾔｰﾎｲｰﾙｱｯｾﾝ	2	[TUGR] INC.2-7
2	06802-50008		TIRE,UNIQUE,500-8	ﾀｲﾔ	2	A,B,D,E [TUJR]
-	06806-50008		TIRE,UNIQUE,500-8	ﾀｲﾔ	2	A,B,D,E [TUJR]
-	06806-50008		TIRE,UNIQUE,500-8	ﾀｲﾔ	2	C,F [TUJR]
-	06802-50008		TIRE,UNIQUE,500-8	ﾀｲﾔ	2	C,F [TUJR]
-	06851-50008		TIRE,SOFTONE,500-8	ﾀｲﾔ	2	[TUSR]
-	06841-50008		TIRE,WHITE,500-8	ﾀｲﾔ	2	[TUWR]
-	06843-50008		TIRE,GREEN,500-8	ﾀｲﾔ	2	[TUGR]
A2	52516-80302		RIM-ASSY,300D-8	ﾘﾑｱｯｾﾝ	2	[TUJR][TUSR][TUWR][TUGR] INC.3-7
3	NO PART NO.	#	RIM,OUTSIDE	ﾘﾑ	2	[TUJR][TUSR][TUWR][TUGR]
4	NO PART NO.	#	RIM,INSIDE	ﾘﾑ	2	[TUJR][TUSR][TUWR][TUGR]
5	514A3-82611		BOLT	ﾎﾞﾙﾄ	12	[TUJR][TUSR][TUWR][TUGR]
6	01400-10012		NUT	ﾅｯﾄ	12	[TUJR][TUSR][TUWR][TUGR]
7	02011-00012		WASHER	ﾜｯｼｬ	12	[TUJR][TUSR][TUWR][TUGR]

FIG.92 REAR WHEEL [TUJR/DR R]

(F50144N0) リヤーホイール

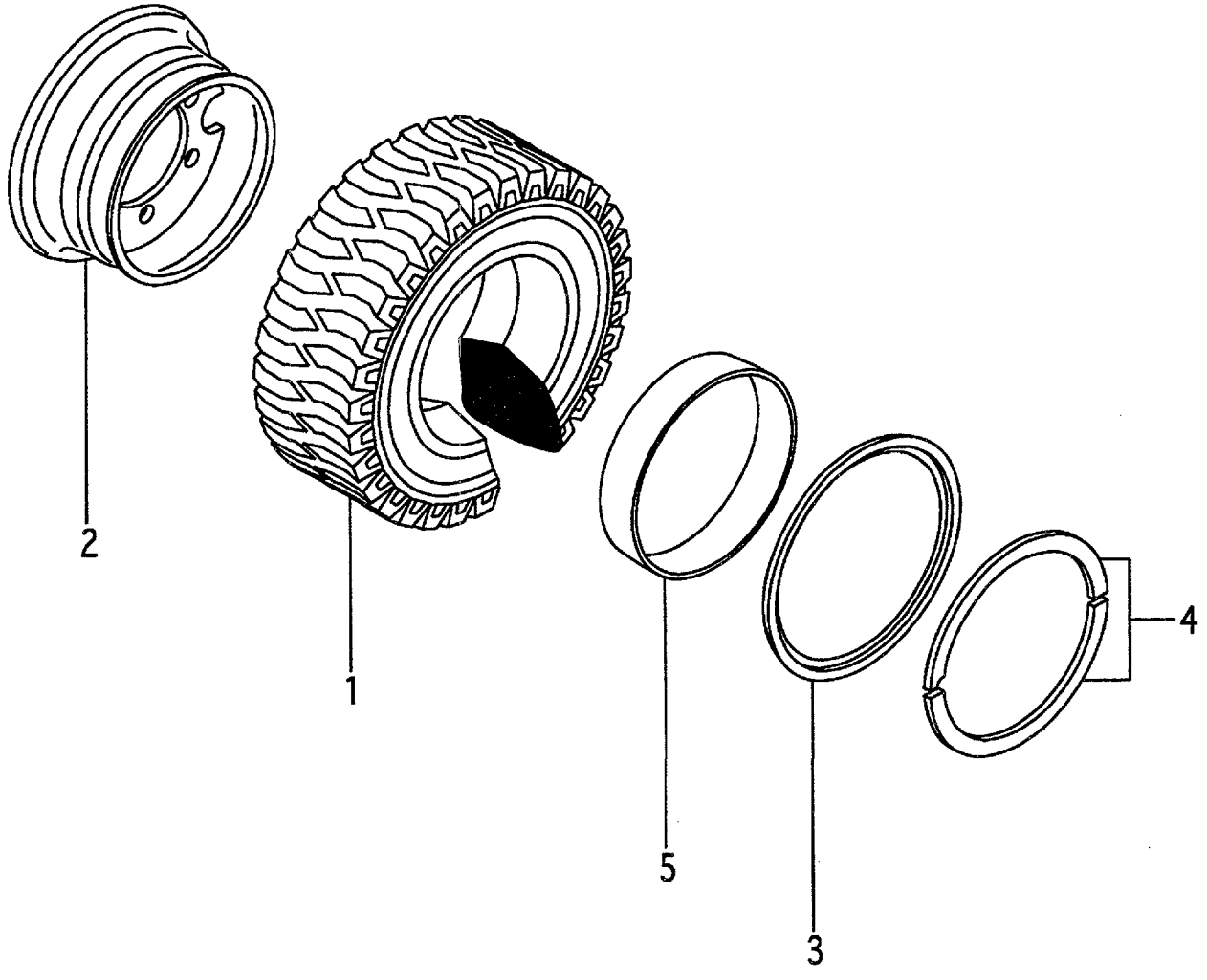

A:FG10C19 FG10T19 FG15C19 FG15T19 FG18C19 FG18T19
B:FD10C19 FD10T19 FD15C19 FD15T19 FD18C19 FD18T19

FIG.92
(F50144N0)

Item No	Part No.	Mark	Description		Req'd	Remarks : Serial No.
A1	54236-81521		WHEEL-ASSY,REAR	ﾘﾔｰﾎｲｰﾙｱｯｾﾝ	2	[TUJR/DR R] INC.1-5
1	06805-50008		TIRE,UNIQUE,500-8	ﾀｲﾔ	2	[TUJR/DR R]
-	06806-50008		TIRE,UNIQUE,500-8	ﾀｲﾔ	2	[TUJR/DR R]
A2	54236-81601		RIM-ASSY,300D-8	ﾘﾑｱｯｾﾝ	2	[TUJR/DR R] INC.2-5
2	NO PART NO.	#	RIM	ﾘﾑ	2	[TUJR/DR R]
3	54236-83081		FLANGE,SIDE	ﾌﾗﾝｼﾞ	2	[TUJR/DR R]
4	54236-83091		RING,LOCK	ﾘﾝｸﾞ	2	[TUJR/DR R]
5	54236-83101		BAND	ﾊﾞﾝﾄﾞ	2	[TUJR/DR R]

FIG.93 REAR WHEEL [TRAR]

(F50144P0) リヤーホイール

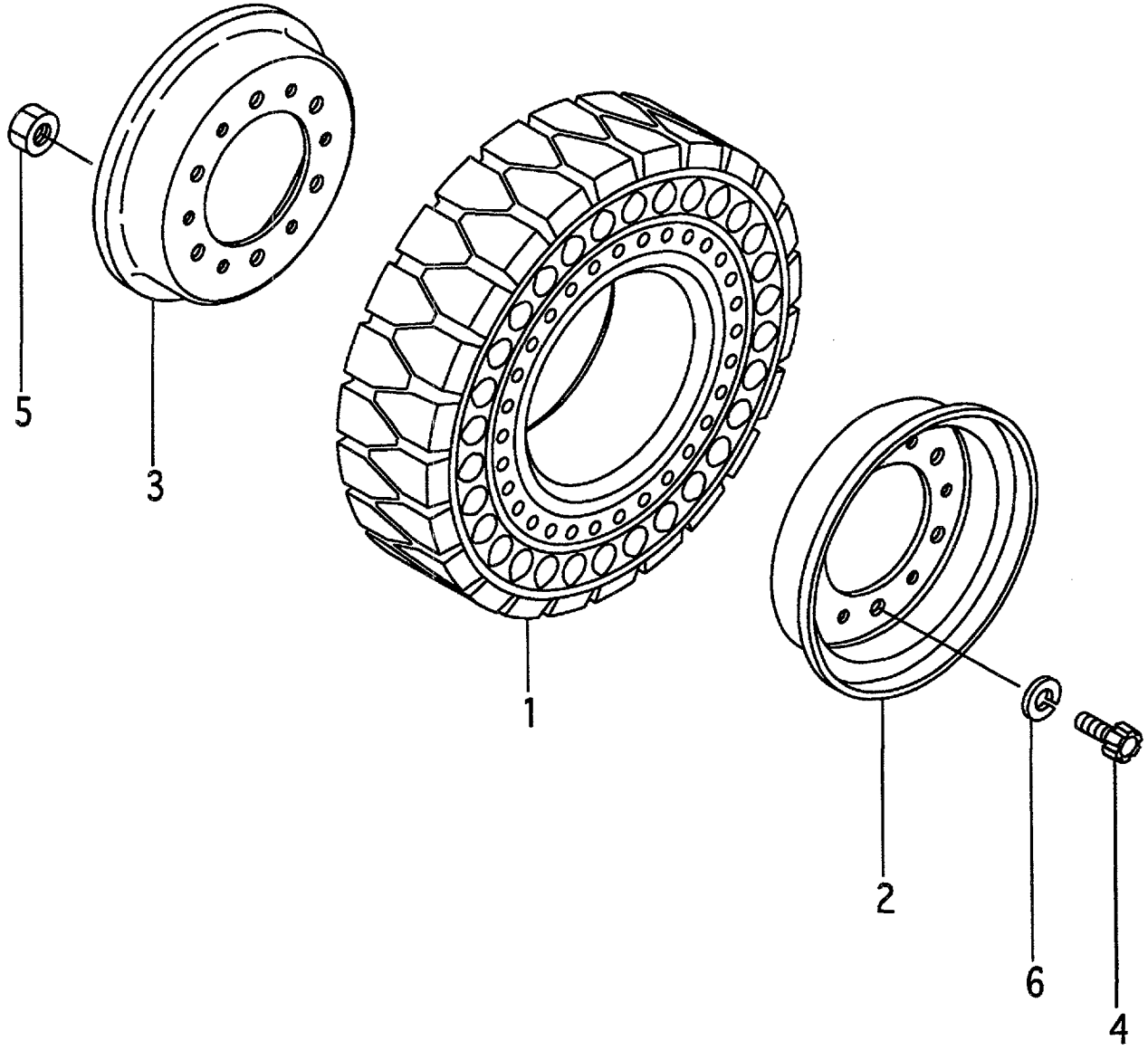

A:FG10C19 FG10T19 FG15C19 FG15T19 FG18C19 FG18T19
B:FD10C19 FD10T19 FD15C19 FD15T19 FD18C19 FD18T19

Item No	Part No.	Mark	Description		Req'd	Remarks : Serial No.
A1	516G6-80271		WHEEL-ASSY,REAR	ﾘﾔｰﾎｲｰﾙｱｯｾﾝ	2	[TRAR] INC.1-6
1	516G6-85001		TIRE,AIR-BOSS,500-8	ﾀｲﾔ	2	[TRAR]
A2	52516-80302		RIM-ASSY,300D-8	ﾘﾑｱｯｾﾝ	2	[TRAR] INC.2,3
2	NO PART NO.	#	RIM,OUTSIDE	ﾘﾑ	2	[TRAR]
3	NO PART NO.	#	RIM,INSIDE	ﾘﾑ	2	[TRAR]
4	514A3-82611		BOLT	ﾎﾞﾙﾄ	12	[TRAR]
5	01400-10012		NUT	ﾅｯﾄ	12	[TRAR]
6	02011-00012		WASHER	ﾜｯｼｬ	12	[TRAR]

FIG.94 FENDER [DD][SDD]

(F50144Q0) ﾌｪﾝﾀﾞ

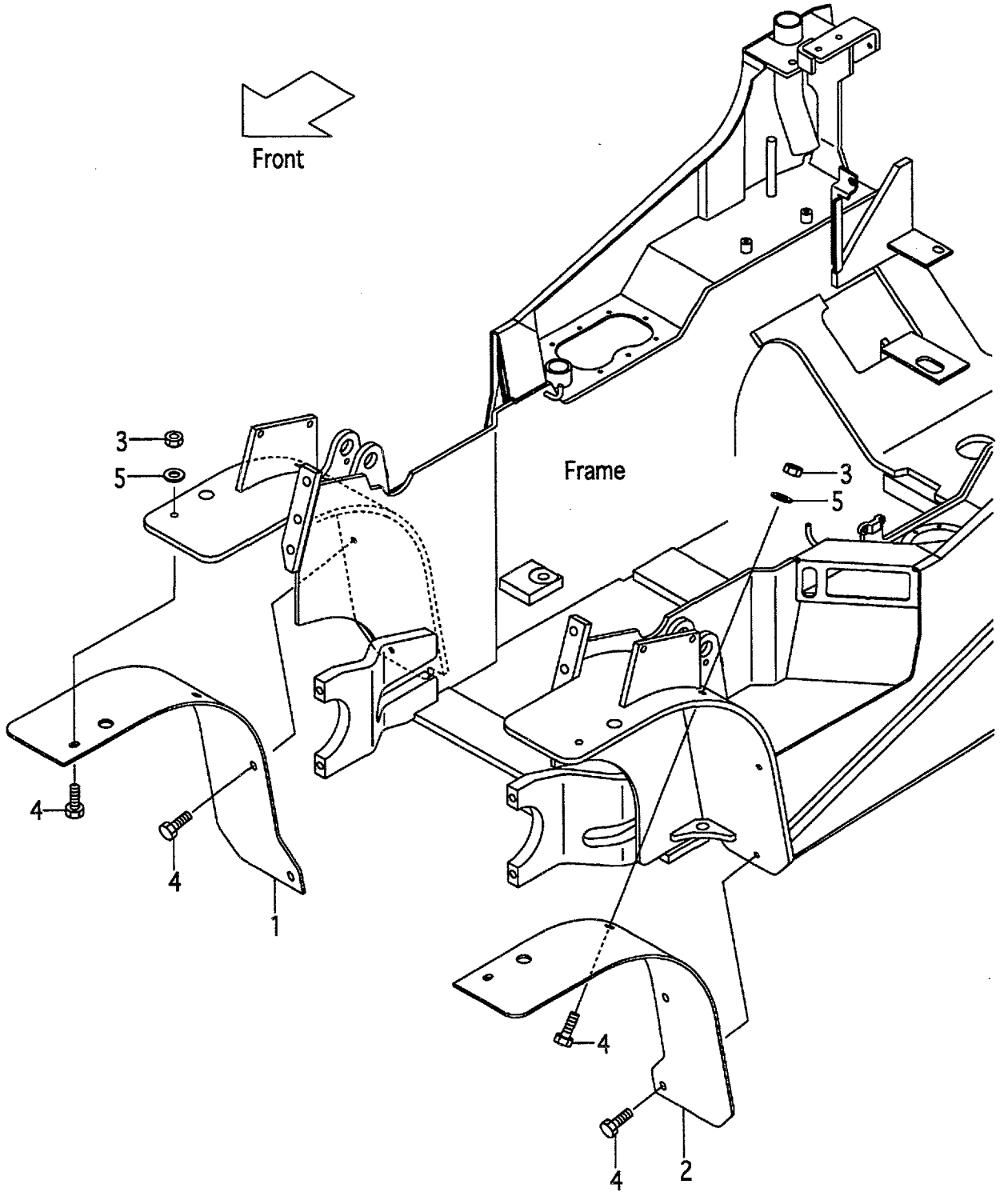

A:FG10C19 FG10T19 FG15C19 FG15T19 FG18C19 FG18T19
B:FD10C19 FD10T19 FD15C19 FD15T19 FD18C19 FD18T19

FIG.94
(F50144Q0)

Item No	Part No.	Mark	Description	Req'd	Remarks : Serial No.
1	518G7-42001		FENDER,FRONT,RH ﾌｪﾝﾀﾞ	1	[DD]
-	518G7-42021		FENDER,FRONT,RH ﾌｪﾝﾀﾞ	1	[SDD]
2	518G7-42011		FENDER,FRONT,LH ﾌｪﾝﾀﾞ	1	[DD]
-	518G7-42031		FENDER,FRONT,LH ﾌｪﾝﾀﾞ	1	[SDD]
3	01400-00010		NUT ﾅｯﾄ	4	[DD][SDD]
4	01186-10030		BOLT ﾎﾞﾙﾄ	8	[DD][SDD]
5	02000-00010		WASHER ﾜｯｼｬ	4	[DD][SDD]

FIG.95 POWER CYLINDER

(F5014510) ﾊﾟﾜｰｼﾘﾝﾀﾞ

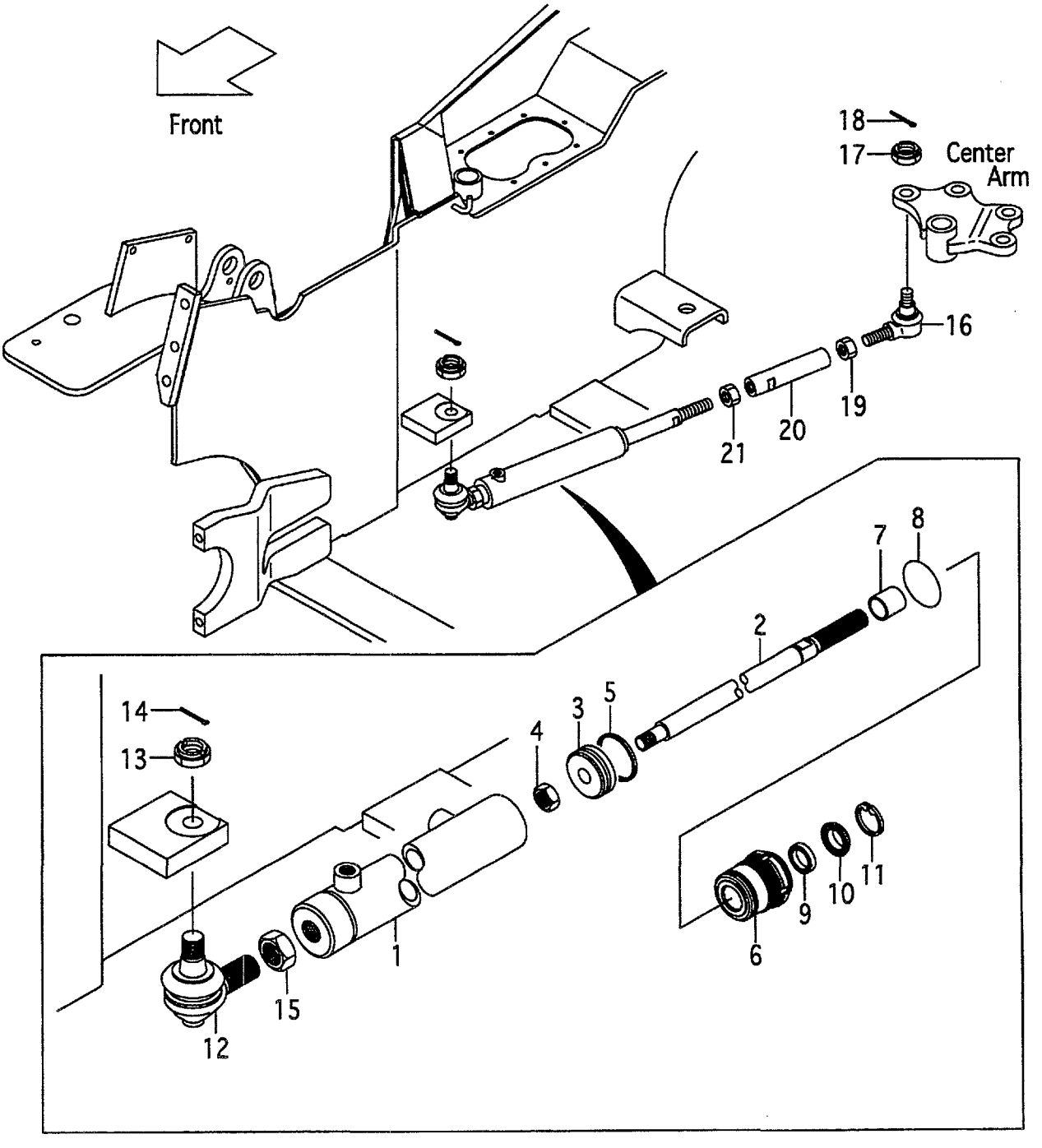

A:FG10C19 FG10T19 FG15C19 FG15T19 FG18C19 FG18T19
B:FD10C19 FD10T19 FD15C19 FD15T19 FD18C19 FD18T19

Item No	Part No.	Mark	Description		Req'd	Remarks : Serial No.
A1	216G4-50401		CYL-ASSY,PS	ﾊﾟﾜｽﾃｱｼﾘﾝﾀﾞｱｯｾﾝ	1	INC.1-15
1	216G4-52101		TUBE,CYL	ﾁｭｰﾌﾞ	1	
A2	25594-52261		ROD-ASSY,PISTON	ﾋﾟｽﾄﾝﾛｯﾄﾞｱｯｾﾝ	1	INC.2-4
2	25594-52271		ROD,PISTON	ﾛｯﾄﾞ	1	
3	25594-52281		PISTON	ﾋﾟｽﾄﾝ	1	
4	01402-10016		NUT	ﾅｯﾄ	1	
5	25594-52362	*	SEAL,SLIPPER	ｼｰﾙ	1	
6	25594-52401		CAP,CYL	ｷｬｯﾌﾟ	1	
7	25594-52411		BUSHING	ﾌﾞｯｼﾝｸﾞ	1	
8	03350-00450	*	O-RING	Oﾘﾝｸﾞ	1	
9	25594-52371	*	PACKING	ﾊﾟｯｷﾝｸﾞ	1	
10	25594-52381	*	SEAL,DUST	ｼｰﾙ	1	
11	25594-52391	*	RING,SNAP	ｽﾅｯﾌﾟﾘﾝｸﾞ	1	
A3	24234-30551		END-ASSY,ROD,RH	ｴﾝﾄﾞｱｯｾﾝ	1	INC.12-14
12	NO PART NO.	#	END,ROD,RH	ｴﾝﾄﾞ	1	
13	01412-10016		NUT,CASTLE	ﾅｯﾄ	1	
14	02200-32032		PIN,COTTER	ﾋﾟﾝ	1	
15	01402-00022		NUT	ﾅｯﾄ	1	
16	24234-32381		END,ROD,LH	ｴﾝﾄﾞ	1	
17	01412-10016		NUT,CASTLE	ﾅｯﾄ	1	
18	02200-32032		PIN,COTTER	ﾋﾟﾝ	1	
19	01407-00022		NUT,LH	ﾅｯﾄ	1	
20	216G4-52071		JOINT	ｼﾞｮｲﾝﾄ	1	
21	01402-00020		NUT	ﾅｯﾄ	1	
K1	25594-59802		KIT,REPAIR	ﾘﾍﾟｱｷｯﾄ	1	INC.5,8-11

FIG.96 POWER CYLINDER [EXC][EXE][EXN][OBT][PSO]

(F5014520) ﾊﾟﾜｰｼﾘﾝﾀﾞ

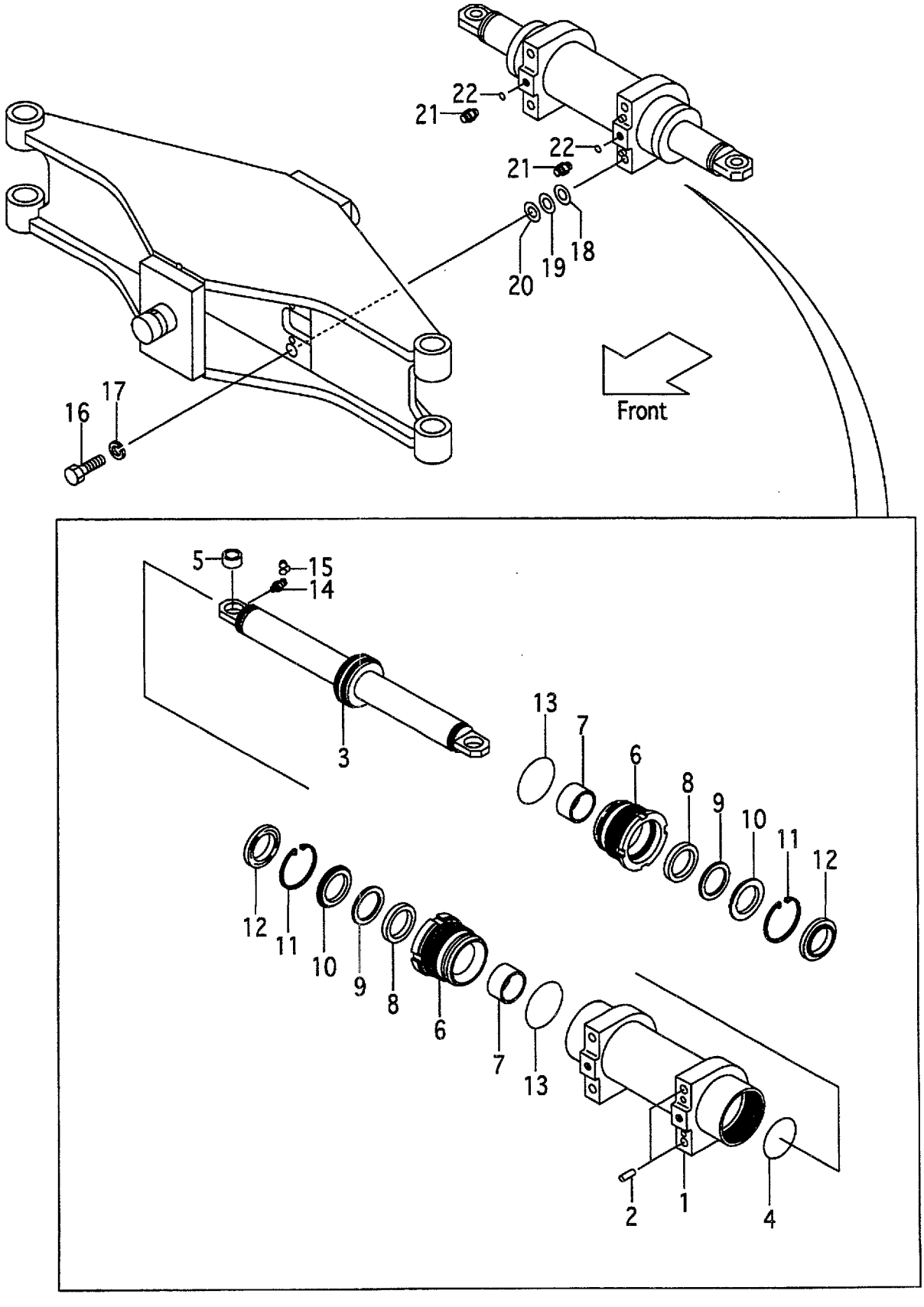

A:FG10C19 FG10T19 FG15C19 FG15T19 FG18C19 FG18T19
B:FD10C19 FD10T19 FD15C19 FD15T19 FD18C19 FD18T19

FIG.96
(F5014520)

Item No	Part No.	Mark	Description		Req'd	Remarks : Serial No.
A1	510F2-40403		CYL-ASSY,PS	ﾊﾟﾜｽﾃｼﾘﾝﾀﾞｱｯｾﾝ	1	[EXC][EXE][EXN][OBT][PSO] [EXB/OBT][EXB/PSO] INC.1-15
1	510F2-40413		TUBE,CYL	ﾁｭｰﾌﾞ	1	[EXC][EXE][EXN][OBT][PSO] [EXB/OBT][EXB/PSO]
2	02212-10020		PIN,PARALLEL	ﾋﾟﾝ	2	[EXC][EXE][EXN][OBT][PSO] [EXB/OBT][EXB/PSO]
A2	510F2-40441		ROD-ASSY,PISTON	ﾋﾟｽﾄﾝﾛｯﾄﾞｱｯｾﾝ	1	[EXC][EXE][EXN][OBT][PSO] [EXB/OBT][EXB/PSO] INC.3,4
3	510F2-40421		ROD,PISTON	ﾛｯﾄﾞ	1	[EXC][EXE][EXN][OBT][PSO] [EXB/OBT][EXB/PSO]
4	25784-52342	*	SET,SEAL	ｼｰﾙｾｯﾄ	1	[EXC][EXE][EXN][OBT][PSO] [EXB/OBT][EXB/PSO]
5	510F2-42211		JOINT,SPHERE-FACE	ｼﾞｮｲﾝﾄ	2	[EXC][EXE][EXN][OBT][PSO] [EXB/OBT][EXB/PSO]
6	215B4-52122		CAP,CYL	ｷｬｯﾌﾟ	2	[EXC][EXE][EXN][OBT][PSO] [EXB/OBT][EXB/PSO]
7	59595-55301		BUSHING	ﾌﾞｯｼﾝｸﾞ	2	[EXC][EXE][EXN][OBT][PSO] [EXB/OBT][EXB/PSO]
8	25958-52201	*	PACKING	ﾊﾟｯｷﾝｸﾞ	2	[EXC][EXE][EXN][OBT][PSO] [EXB/OBT][EXB/PSO]
9	25958-52211	*	RING,BACK-UP	ﾘﾝｸﾞ	2	[EXC][EXE][EXN][OBT][PSO] [EXB/OBT][EXB/PSO]
10	25958-52221		RETAINER	ﾘﾃｰﾅ	2	[EXC][EXE][EXN][OBT][PSO] [EXB/OBT][EXB/PSO]
11	02110-00062	*	RING,SNAP	ｽﾅｯﾌﾟﾘﾝｸﾞ	2	[EXC][EXE][EXN][OBT][PSO] [EXB/OBT][EXB/PSO]
12	24469-42701	*	SEAL,DUST	ｼｰﾙ	2	[EXC][EXE][EXN][OBT][PSO] [EXB/OBT][EXB/PSO]
13	214A8-52221	*	O-RING	Oﾘﾝｸﾞ	2	[EXC][EXE][EXN][OBT][PSO] [EXB/OBT][EXB/PSO]
14	81160-00025		FITTING	ﾌｨｯﾃｨﾝｸﾞ	2	[EXC][EXE][EXN][OBT][PSO] [EXB/OBT][EXB/PSO]
15	22199-12401		CAP,NIPPLE	ｷｬｯﾌﾟ	2	[EXC][EXE][EXN][OBT][PSO] [EXB/OBT][EXB/PSO]
16	01100-14030		BOLT	ﾎﾞﾙﾄ	4	[EXC][EXE][EXN][OBT][PSO] [EXB/OBT][EXB/PSO]
17	02010-00014		WASHER	ﾜｯｼｬ	4	[EXC][EXE][EXN][OBT][PSO] [EXB/OBT][EXB/PSO]
18	23460-73121		SHIM,T-0.5	ｼﾑ	4	[EXC][EXE][EXN][OBT][PSO] [EXB/OBT][EXB/PSO]
19	15583-82681		SHIM,T-0.2	ｼﾑ	4	[EXC][EXE][EXN][OBT][PSO] [EXB/OBT][EXB/PSO]
20	15583-82691		SHIM,T-0.1	ｼﾑ	4	[EXC][EXE][EXN][OBT][PSO] [EXB/OBT][EXB/PSO]
A3	224W7-62701		NIPPLE-ASSY	ﾆｯﾌﾟﾙｱｯｾﾝ	2	[EXC][EXE][EXN][OBT][PSO] [EXB/OBT][EXB/PSO] INC.21,22
21	224W7-62711		NIPPLE	ﾆｯﾌﾟﾙ	2	[EXC][EXE][EXN][OBT][PSO] [EXB/OBT][EXB/PSO]
22	03320-00110		O-RING	Oﾘﾝｸﾞ	2	[EXC][EXE][EXN][OBT][PSO] [EXB/OBT][EXB/PSO]

FIG.96 POWER CYLINDER [EXC][EXE][EXN][OBT][PSO]

(F5014520) ﾊﾟﾜｰｼﾘﾝﾀﾞ

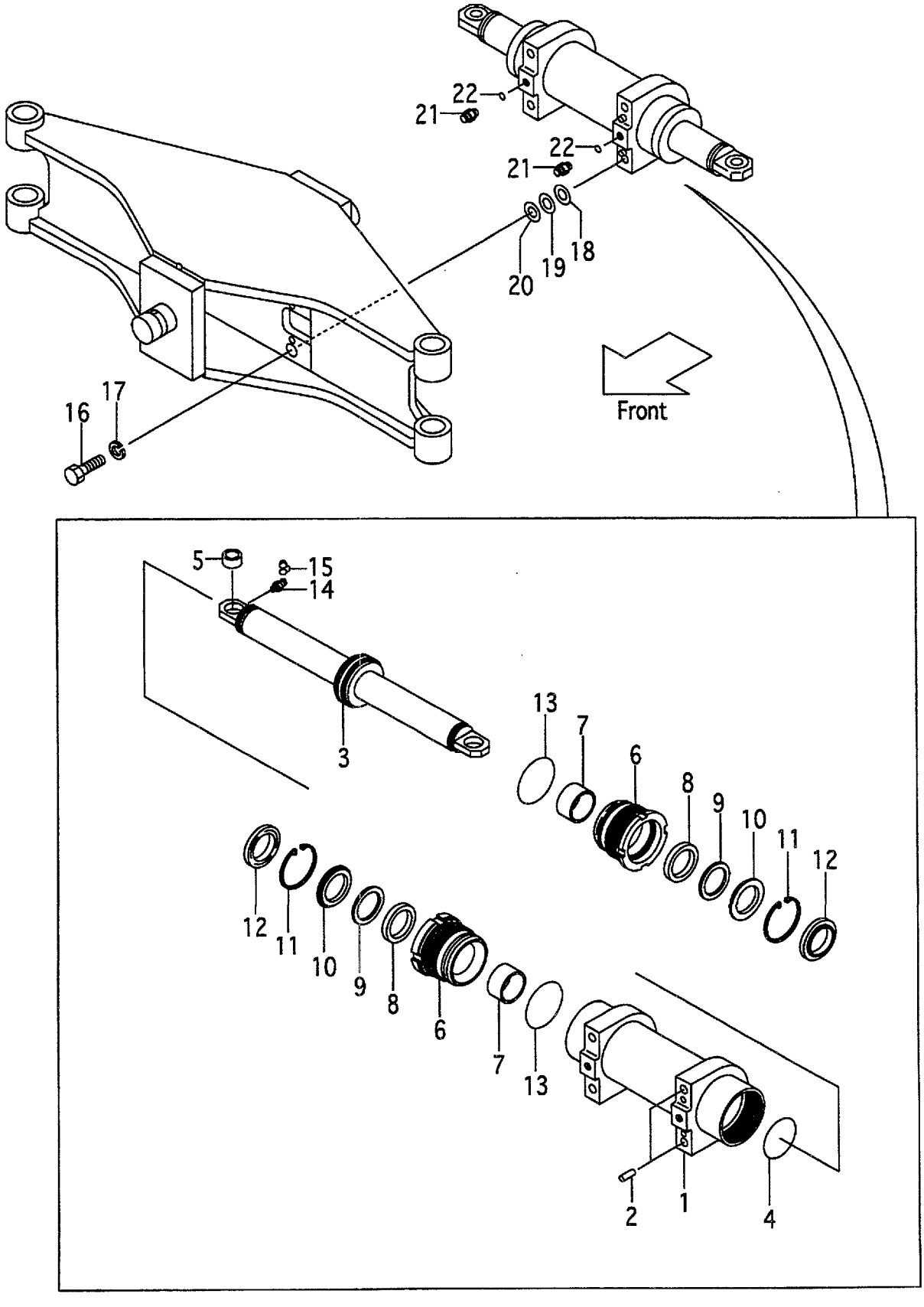

A:FG10C19 FG10T19 FG15C19 FG15T19 FG18C19 FG18T19
B:FD10C19 FD10T19 FD15C19 FD15T19 FD18C19 FD18T19

Item No	Part No.	Mark	Description	Req'd	Remarks : Serial No.
K1	25594-59802		KIT,REPAIR リペアキット	1	[EXC&E&N][OBT][PSO] [EXB/OBT&PSO] INC.4,8,9,11-13

FIG.97 POWER CYLINDER [(EXC,EXE,EXN)/PSS]

(F5014530) ﾊﾟﾜｰｼﾘﾝﾀﾞ

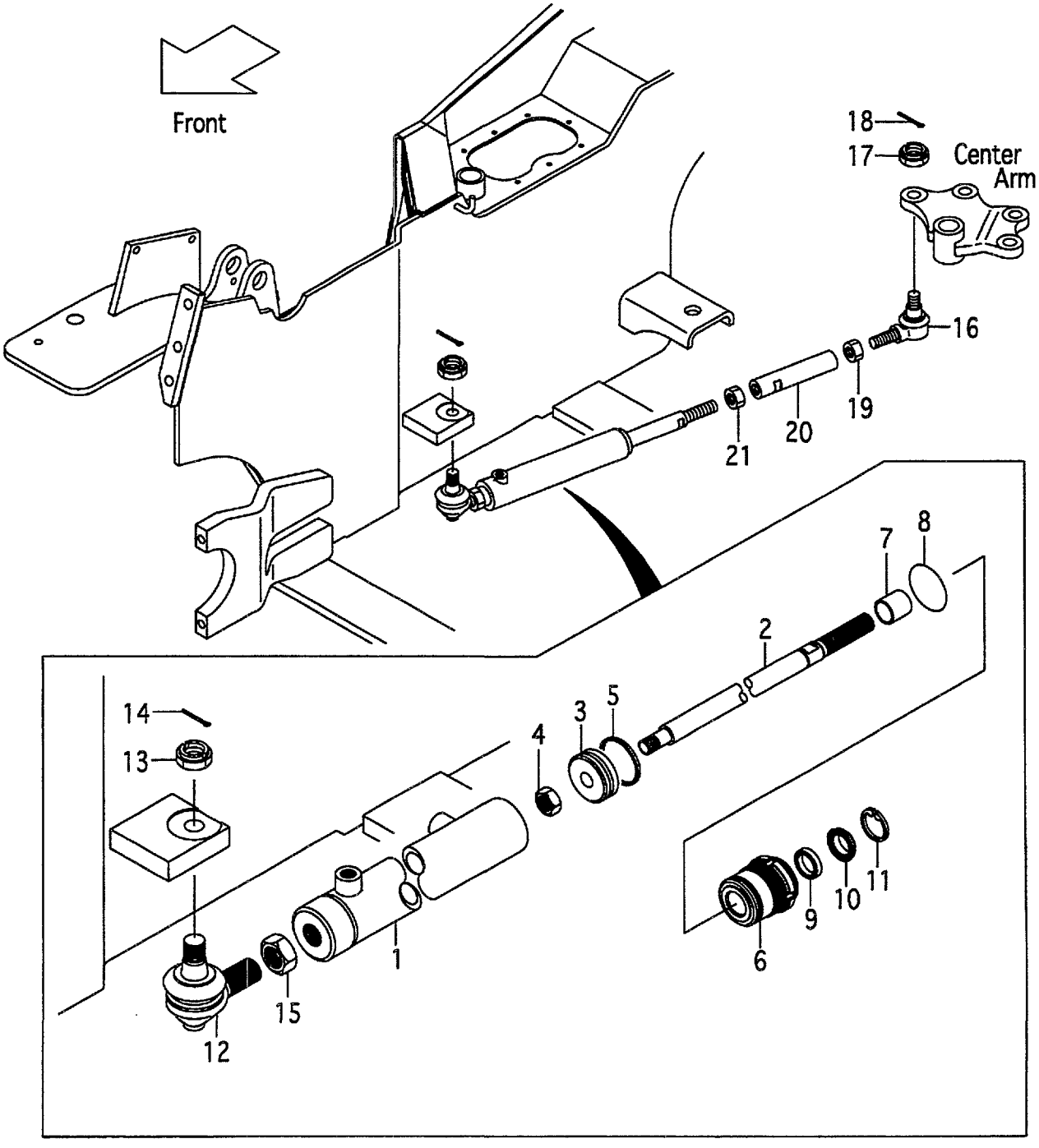

A:FG10C19 FG10T19 FG15C19 FG15T19 FG18C19 FG18T19
B:FD10C19 FD10T19 FD15C19 FD15T19 FD18C19 FD18T19

Item No	Part No.	Mark	Description		Req'd	Remarks : Serial No.
A1	216G4-50401		CYL-ASSY,PS	ﾊﾟﾜｽﾃｼﾘﾝﾀﾞｱｯｾﾝ	1	[EXC/PSS][EXE/PSS][EXN/PSS]
						INC.1-15
1	216G4-52101		TUBE,CYL	ﾁｭｰﾌﾞ	1	[EXC/PSS][EXE/PSS][EXN/PSS]
A2	25594-52261		ROD-ASSY,PISTON	ﾋﾟｽﾄﾝﾛｯﾄﾞｱｯｾﾝ	1	[EXC/PSS][EXE/PSS][EXN/PSS]
						INC.2-4
2	25594-52271		ROD,PISTON	ﾛｯﾄﾞ	1	[EXC/PSS][EXE/PSS][EXN/PSS]
3	25594-52281		PISTON	ﾋﾟｽﾄﾝ	1	[EXC/PSS][EXE/PSS][EXN/PSS]
4	01402-10016		NUT	ﾅｯﾄ	1	[EXC/PSS][EXE/PSS][EXN/PSS]
5	25594-52362	*	SEAL,SLIPPER	ｼｰﾙ	1	[EXC/PSS][EXE/PSS][EXN/PSS]
6	25594-52401		CAP,CYL	ｷｬｯﾌﾟ	1	[EXC/PSS][EXE/PSS][EXN/PSS]
7	25594-52411		BUSHING	ﾌﾞｯｼﾝｸﾞ	1	[EXC/PSS][EXE/PSS][EXN/PSS]
8	03350-00450	*	O-RING	Oﾘﾝｸﾞ	1	[EXC/PSS][EXE/PSS][EXN/PSS]
9	25594-52371	*	PACKING	ﾊﾟｯｷﾝｸﾞ	1	[EXC/PSS][EXE/PSS][EXN/PSS]
10	25594-52381	*	SEAL,DUST	ｼｰﾙ	1	[EXC/PSS][EXE/PSS][EXN/PSS]
11	25594-52391	*	RING,SNAP	ｽﾅｯﾌﾟﾘﾝｸﾞ	1	[EXC/PSS][EXE/PSS][EXN/PSS]
A3	24234-30551		END-ASSY,ROD,RH	ｴﾝﾄﾞｱｯｾﾝ	1	[EXC/PSS][EXE/PSS][EXN/PSS]
						INC.12-14
12	NO PART NO.	*	END,ROD,RH	ｴﾝﾄﾞ	1	[EXC/PSS][EXE/PSS][EXN/PSS]
13	01412-10016		NUT,CASTLE	ﾅｯﾄ	1	[EXC/PSS][EXE/PSS][EXN/PSS]
14	02200-32032		PIN,COTTER	ﾋﾟﾝ	1	[EXC/PSS][EXE/PSS][EXN/PSS]
15	01402-00022		NUT	ﾅｯﾄ	1	[EXC/PSS][EXE/PSS][EXN/PSS]
16	24234-32381		END,ROD,LH	ｴﾝﾄﾞ	1	[EXC/PSS][EXE/PSS][EXN/PSS]
17	01412-10016		NUT,CASTLE	ﾅｯﾄ	1	[EXC/PSS][EXE/PSS][EXN/PSS]
18	02200-32032		PIN,COTTER	ﾋﾟﾝ	1	[EXC/PSS][EXE/PSS][EXN/PSS]
19	01407-00022		NUT,LH	ﾅｯﾄ	1	[EXC/PSS][EXE/PSS][EXN/PSS]
20	216G4-52071		JOINT	ｼﾞｮｲﾝﾄ	1	[EXC/PSS][EXE/PSS][EXN/PSS]
21	01402-00020		NUT	ﾅｯﾄ	1	[EXC/PSS][EXE/PSS][EXN/PSS]
K1	25594-59802		KIT,REPAIR	ﾘﾍﾟｱｷｯﾄ	1	[EXC/PSS][EXE/PSS][EXN/PSS]
						INC.5,8-11

FIG.98 POWER CYLINDER BOOT [PSB][FC][RINFC]

(F5014540) ﾊﾟﾜｰｼﾘﾝﾀﾞ

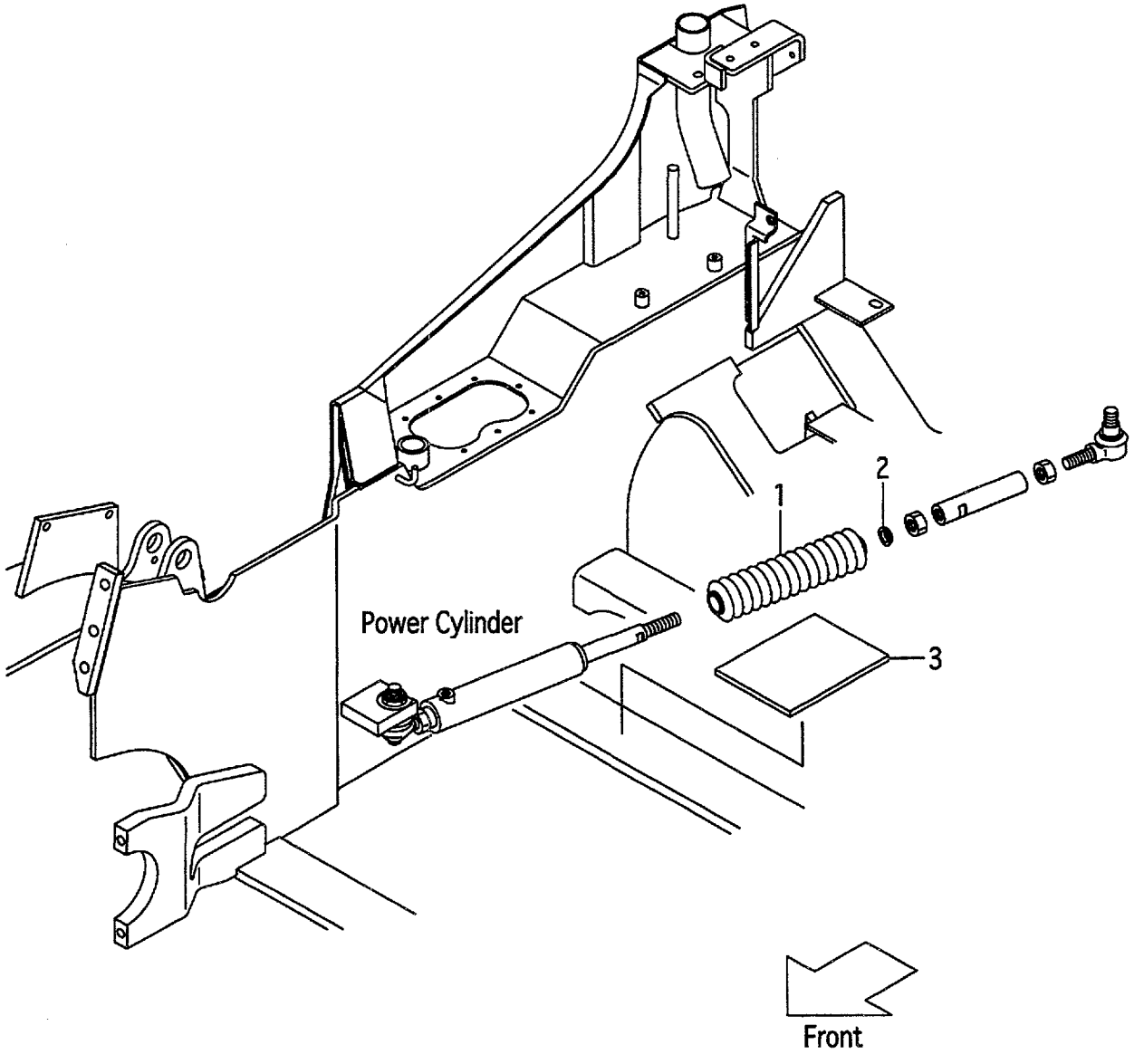

FIG.98
(F5014540)

A:FG10C19 FG10T19 FG15C19 FG15T19 FG18C19 FG18T19
B:FD10C19 FD10T19 FD15C19 FD15T19 FD18C19 FD18T19

Item No	Part No.	Mark	Description	Req'd	Remarks : Serial No.
1	25594-52431		BOOT,POWER-CYL ﾌﾞｰﾂ	1	[PSB][FC][RINFC]
2	216G4-52041		HANGER,BOOT ﾊﾝｶﾞ	1	[PSB][FC][RINFC]
3	216G4-52051		RUBBER ﾗﾊﾞｰ	1	[PSB][FC][RINFC]

FIG.99 OVERHEAD GUARD

(F5015110) オーバヘッドガード

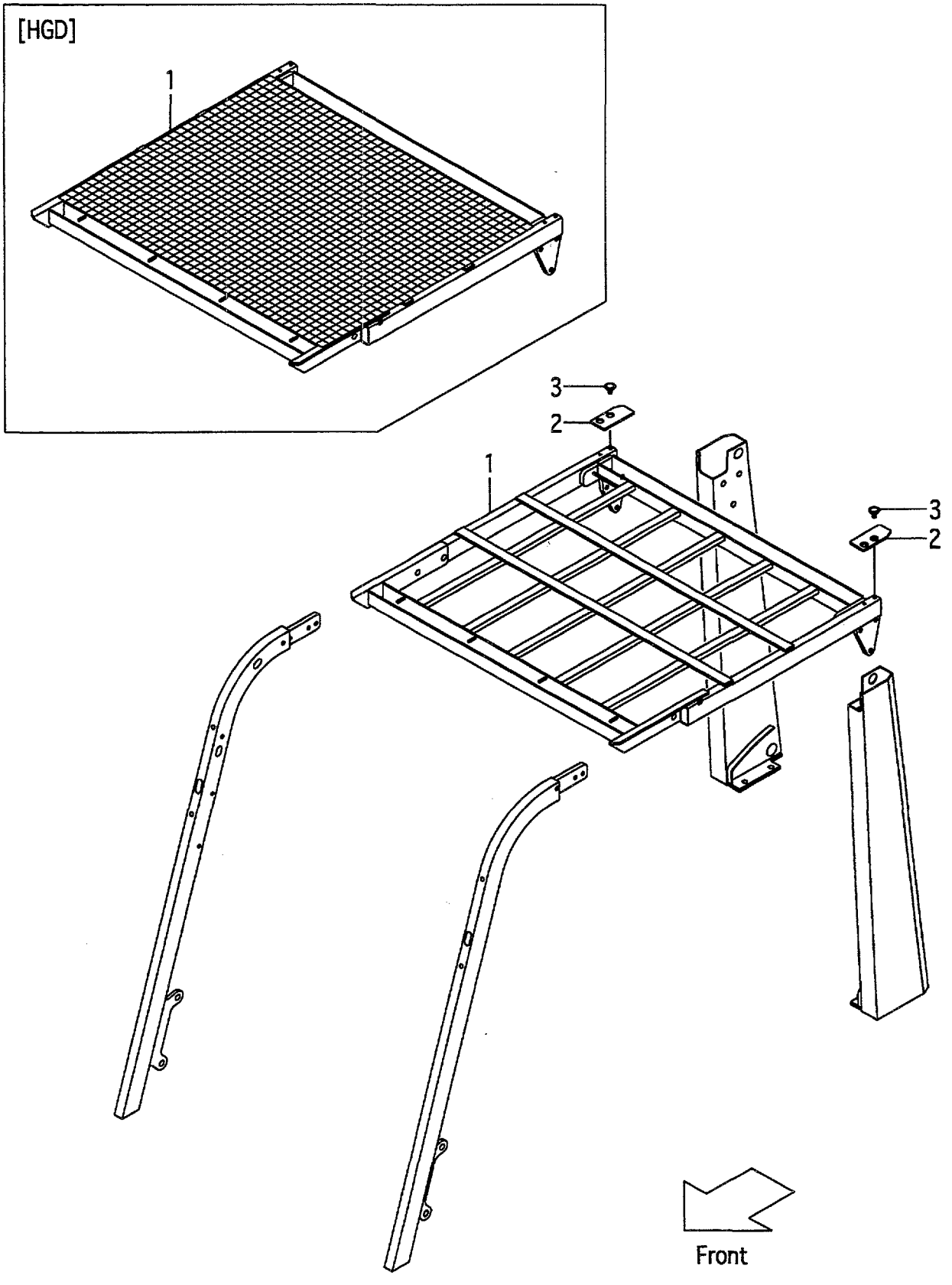

A:FG10C19 FG10T19 FG15C19 FG15T19 FG18C19 FG18T19
B:FD10C19 FD10T19 FD15C19 FD15T19 FD18C19 FD18T19

Item No	Part No.	Mark	Description		Req'd	Remarks : Serial No.
1	218M5-10401		GUARD,HEAD	ｶﾞｰﾄﾞ	1	
-	539A2-90201		GUARD,HEAD	ｶﾞｰﾄﾞ	1	[HGD]
-	539A5-00401		GUARD,HEAD	ｶﾞｰﾄﾞ	1	[HGH060]
2	218M5-12501		COVER	ｶﾊﾞｰ	2	
3	216G6-42541		CLIP	ｸﾘｯﾌﾟ	4	

FIG.100 OVERHEAD GUARD [EXB][EXC][EXE][EXK][EXN]

(F5015180) オーバヘッドガード

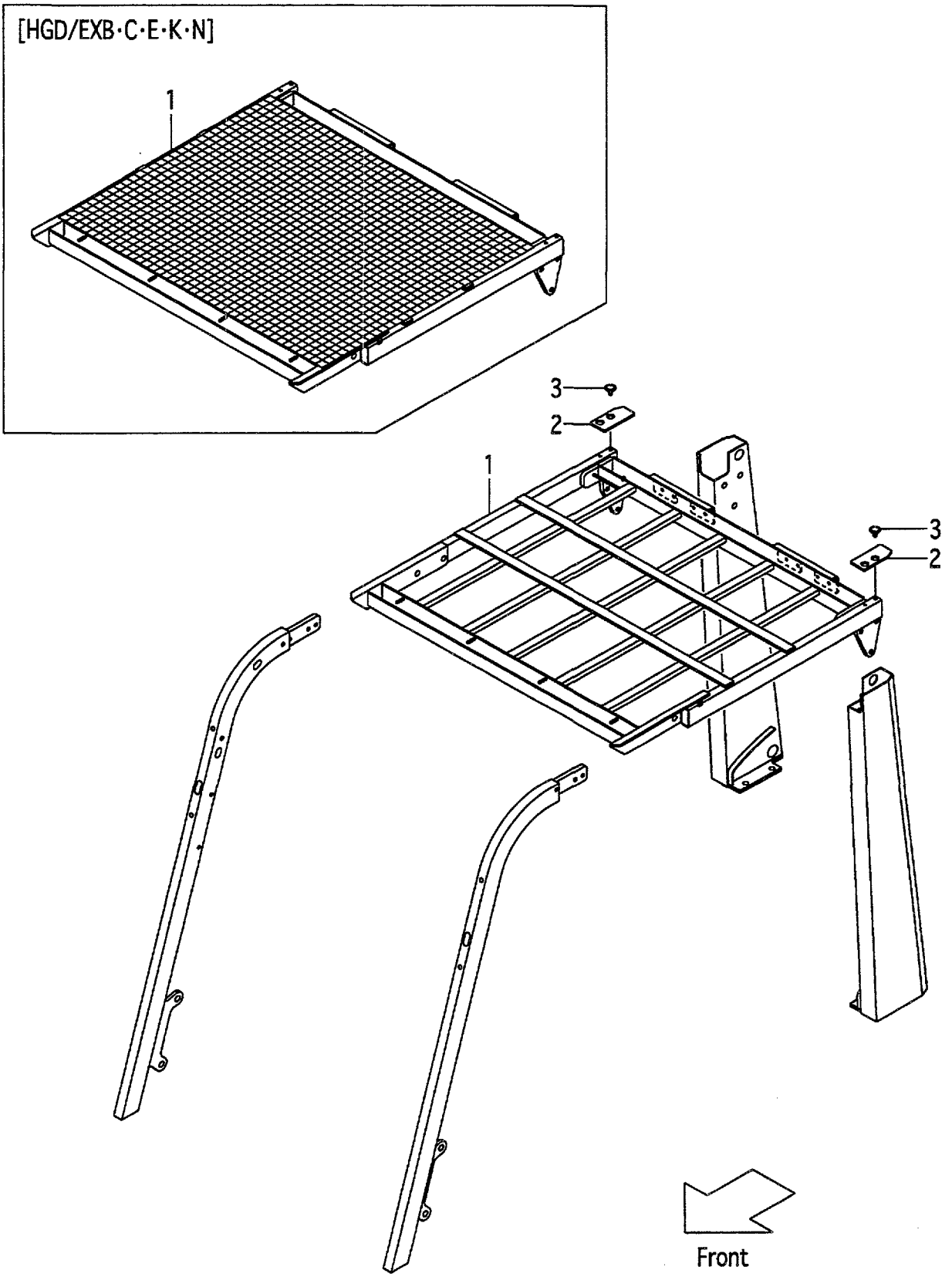

FIG.100

(F5015180)

A:FG10C19 FG10T19 FG15C19 FG15T19 FG18C19 FG18T19
B:FD10C19 FD10T19 FD15C19 FD15T19 FD18C19 FD18T19

Item No	Part No.	Mark	Description		Req'd	Remarks : Serial No.
1	518G2-80231		GUARD,HEAD	ｶﾞｰﾄﾞ	1	[EXB][EXC][EXE][EXK]
-	539A2-60231		GUARD,HEAD	ｶﾞｰﾄﾞ	1	[EXN]
-	539A2-90301		GUARD,HEAD	ｶﾞｰﾄﾞ	1	[HGD/EXB][HGD/EXC] [HGD/EXE][HGD/EXK]
-	539A2-90401		GUARD,HEAD	ｶﾞｰﾄﾞ	1	[HGD/EXN]
2	218M5-12501		COVER	ｶﾊﾞｰ	2	[EXB][EXC][EXE][EXK][EXN]
3	216G6-42541		CLIP	ｸﾘｯﾌﾟ	4	[EXB][EXC][EXE][EXK][EXN]

FIG.101 FRONT PIPE

(F5015120) ﾌﾛﾝﾄﾊﾟｲﾌﾟ

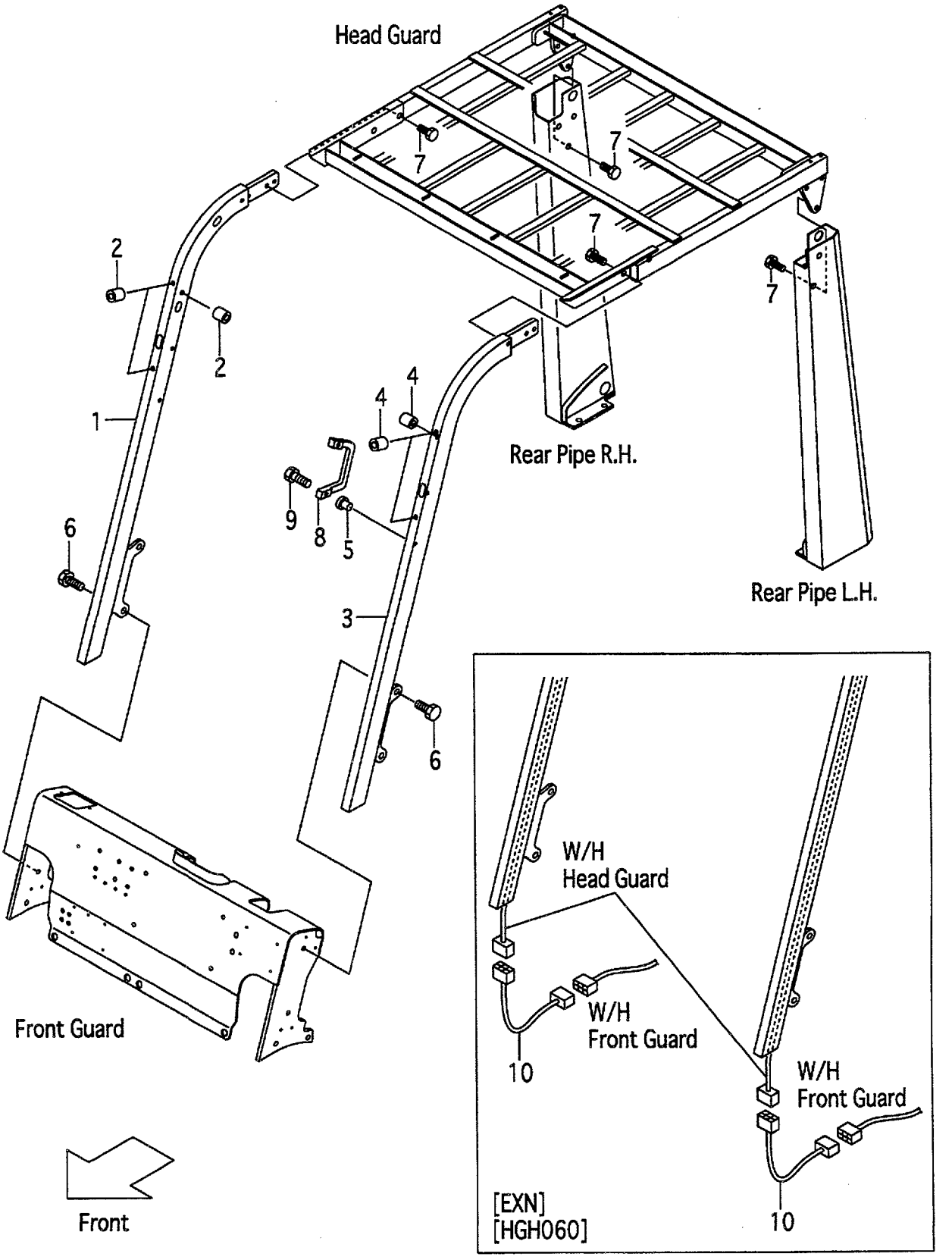

A:FG10C19 FG10T19 FG15C19 FG15T19 FG18C19 FG18T19
B:FD10C19 FD10T19 FD15C19 FD15T19 FD18C19 FD18T19

Item No	Part No.	Mark	Description		Req'd	Remarks : Serial No.
A1	218G5-10341		PIPE-ASSY,FRONT,RH	ﾌﾛﾝﾄﾊﾟｲﾌﾟｱｯｾﾝ	1	INC.1,2
-	218M5-10341		PIPE-ASSY,FRONT,RH	ﾌﾛﾝﾄﾊﾟｲﾌﾟｱｯｾﾝ	1	[EXB][EXC][EXE][EXK][HGH] INC.1,2
-	518G2-60201		PIPE-ASSY,FRONT,RH	ﾌﾛﾝﾄﾊﾟｲﾌﾟｱｯｾﾝ	1	[EXN][HGH060] INC.1,2
1	NO PART NO.	#	PIPE,FRONT,RH	ﾊﾟｲﾌﾟ	1	
-	NO PART NO.	#	PIPE,FRONT,RH	ﾊﾟｲﾌﾟ	1	[EXB][EXC][EXE][EXK][HGH]
-	NO PART NO.	#	PIPE,FRONT,RH	ﾊﾟｲﾌﾟ	1	[EXN][HGH060]
2	514A5-12011		RIVET,POP	ﾘﾍﾞｯﾄ	3	
A2	218G5-10351		PIPE-ASSY,FRONT,LH	ﾌﾛﾝﾄﾊﾟｲﾌﾟｱｯｾﾝ	1	INC.3-5
-	218M5-10351		PIPE-ASSY,FRONT,LH	ﾌﾛﾝﾄﾊﾟｲﾌﾟｱｯｾﾝ	1	[EXB][EXC][EXE][EXK][HGH] INC.3-5
-	518G2-60211		PIPE-ASSY,FRONT,LH	ﾌﾛﾝﾄﾊﾟｲﾌﾟｱｯｾﾝ	1	[EXN][HGH060] INC.3-5
3	NO PART NO.	#	PIPE,FRONT,LH	ﾊﾟｲﾌﾟ	1	
-	NO PART NO.	#	PIPE,FRONT,LH	ﾊﾟｲﾌﾟ	1	[EXB][EXC][EXE][EXK][HGH]
-	NO PART NO.	#	PIPE,FRONT,LH	ﾊﾟｲﾌﾟ	1	[EXN][HGH060]
4	514A5-12011		RIVET,POP	ﾘﾍﾞｯﾄ	3	
5	516G5-13151		RIVET,POP	ﾘﾍﾞｯﾄ	2	
6	01186-12025		BOLT	ﾎﾞﾙﾄ	4	
7	01186-12035		BOLT	ﾎﾞﾙﾄ	10	
8	516G5-13051		GRIP	ｸﾞﾘｯﾌﾟ	1	
9	01171-06025		BOLT	ﾎﾞﾙﾄ	2	
10	229F2-42141		WIRE-HARNESS,R-COMB.	ﾜｲﾔﾊｰﾈｽ	2	[EXN][HGH060]

FIG.102 REAR PIPE

(F5015130) リヤーパイプ

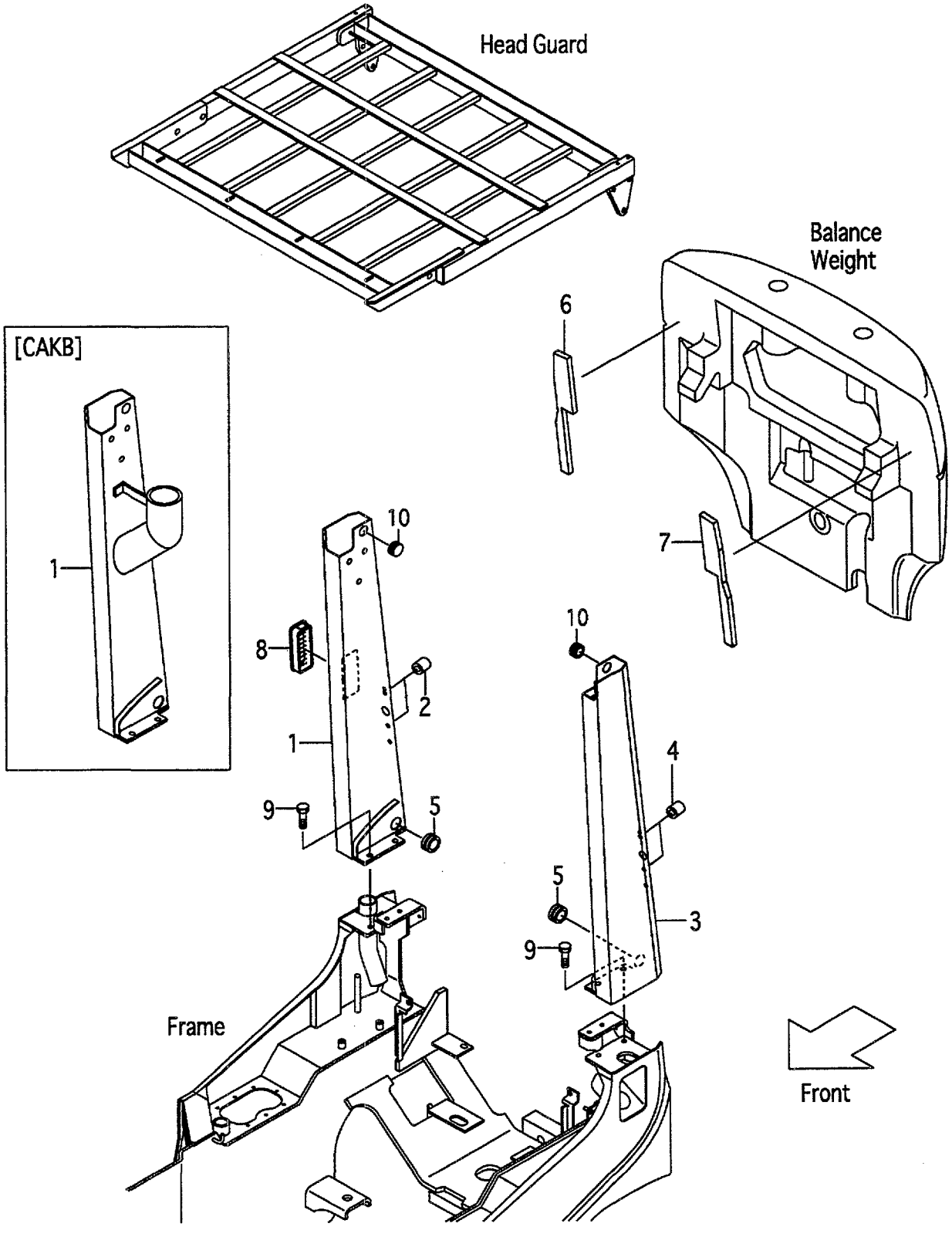

A:FG10C19 FG10T19 FG15C19 FG15T19 FG18C19 FG18T19
B:FD10C19 FD10T19 FD15C19 FD15T19 FD18C19 FD18T19

Item No	Part No.	Mark	Description		Req'd	Remarks : Serial No.
A1	218G5-10111		PIPE-ASSY,REAR,RH	ﾘﾔｰﾊﾟｲﾌﾟｱｯｾﾝ	1	INC.1,2
-	239A5-10111		PIPE-ASSY,REAR,RH	ﾘﾔｰﾊﾟｲﾌﾟｱｯｾﾝ	1	[HGH] INC.1,2
-	539A5-00111		PIPE-ASSY,REAR,RH	ﾘﾔｰﾊﾟｲﾌﾟｱｯｾﾝ	1	[HGH060] INC.1,2
-	518G0-90111		PIPE-ASSY,REAR,RH	ﾘﾔｰﾊﾟｲﾌﾟｱｯｾﾝ	1	[CAKB] INC.1,2
1	NO PART NO.	#	PIPE,REAR,RH	ﾊﾟｲﾌﾟ	1	
-	NO PART NO.	#	PIPE,REAR,RH	ﾊﾟｲﾌﾟ	1	[HGH]
-	NO PART NO.	#	PIPE,REAR,RH	ﾊﾟｲﾌﾟ	1	[HGH060]
-	NO PART NO.	#	PIPE,REAR,RH	ﾊﾟｲﾌﾟ	1	[CAKB]
2	514A5-12011		RIVET,POP	ﾘﾍﾞｯﾄ	2	
A2	218G5-10121		PIPE-ASSY,REAR,LH	ﾘﾔｰﾊﾟｲﾌﾟｱｯｾﾝ	1	INC.3,4
-	239A5-10121		PIPE-ASSY,REAR,LH	ﾘﾔｰﾊﾟｲﾌﾟｱｯｾﾝ	1	[HGH] INC.3,4
-	539A5-00121		PIPE-ASSY,REAR,LH	ﾘﾔｰﾊﾟｲﾌﾟｱｯｾﾝ	1	[HGH060] INC.3,4
3	NO PART NO.	#	PIPE,REAR,LH	ﾊﾟｲﾌﾟ	1	
-	NO PART NO.	#	PIPE,REAR,LH	ﾊﾟｲﾌﾟ	1	[HGH]
-	NO PART NO.	#	PIPE,REAR,LH	ﾊﾟｲﾌﾟ	1	[HGH060]
4	514A5-12011		RIVET,POP	ﾘﾍﾞｯﾄ	2	
5	524W5-12091		GROMMET	ｸﾞﾛﾒｯﾄ	2	
6	239A5-12401		RUBBER,WEIGHT,RH	ﾗﾊﾞｰ	1	
7	239A5-12411		RUBBER,WEIGHT,LH	ﾗﾊﾞｰ	1	
8	230C1-02041		COVER,AIR-INTAKE	ｶﾊﾞｰ	1	(WITHOUT CAKB)
9	01186-12025		BOLT	ﾎﾞﾙﾄ	4	
10	27662-62721		GROMMET	ｸﾞﾛﾒｯﾄ	2	A:10061- B:5019-

FIG.103 REAR PIPE [EXB][EXC][EXE][EXK][EXN]

(F5015140) リヤーパイプ

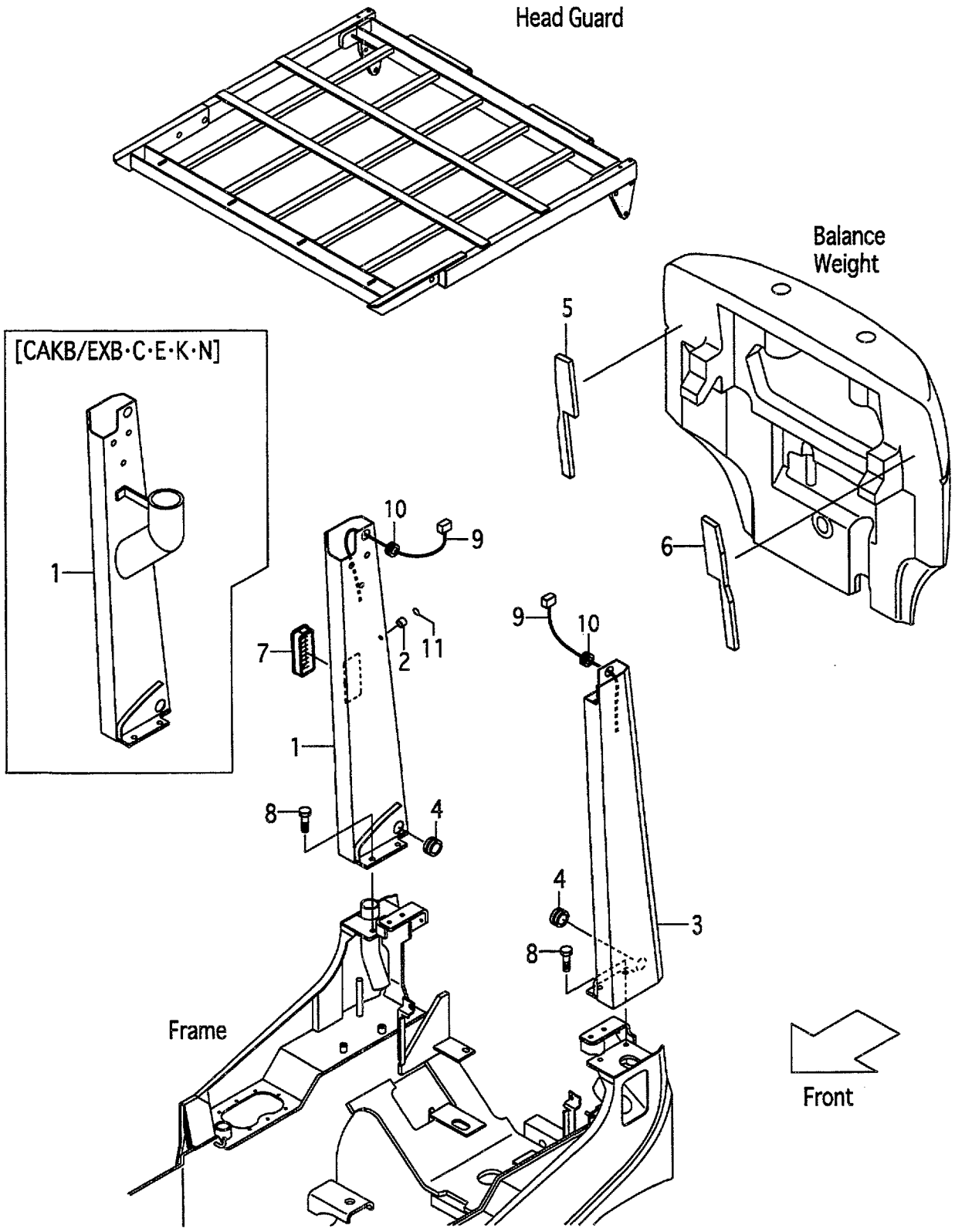

A:FG10C19 FG10T19 FG15C19 FG15T19 FG18C19 FG18T19
B:FD10C19 FD10T19 FD15C19 FD15T19 FD18C19 FD18T19

Item No	Part No.	Mark	Description		Req'd	Remarks : Serial No.
A1	539A2-80111		PIPE-ASSY,REAR,RH	ﾘﾔｰﾊﾟｲﾌﾟｱｯｾﾝ	1	[EXB][EXC][EXE][EXK] INC.1,2
-	539A2-60111		PIPE-ASSY,REAR,RH	ﾘﾔｰﾊﾟｲﾌﾟｱｯｾﾝ	1	[EXN] INC.1,2
-	539C0-90051		PIPE-ASSY,REAR,RH	ﾘﾔｰﾊﾟｲﾌﾟｱｯｾﾝ	1	[CAKB/EXB][CAKB/EXC] [CAKB/EXE][CAKB/EXK] INC.1,2
-	539C0-90061		PIPE-ASSY,REAR,RH	ﾘﾔｰﾊﾟｲﾌﾟｱｯｾﾝ	1	[CAKB/EXN] INC.1,2
1	NO PART NO.	#	PIPE,REAR,RH	ﾊﾟｲﾌﾟ	1	[EXB][EXC][EXE][EXK]
-	NO PART NO.	#	PIPE,REAR,RH	ﾊﾟｲﾌﾟ	1	[EXN]
-	NO PART NO.	#	PIPE,REAR,RH	ﾊﾟｲﾌﾟ	1	[CAKB/EXB][CAKB/EXC] [CAKB/EXE][CAKB/EXK]
-	NO PART NO.	#	PIPE,REAR,RH	ﾊﾟｲﾌﾟ	1	[CAKB/EXN]
2	514A5-12011		RIVET,POP	ﾘﾍﾞｯﾄ	1	[EXB][EXC][EXE][EXK][EXN]
3	539A2-80221		PIPE,REAR,LH	ﾊﾟｲﾌﾟ	1	[EXB][EXC][EXE][EXK]
-	539A2-60221		PIPE,REAR,LH	ﾊﾟｲﾌﾟ	1	[EXN]
4	524W5-12091		GROMMET	ｸﾞﾛﾒｯﾄ	2	[EXB][EXC][EXE][EXK][EXN]
5	239A5-12401		RUBBER,WEIGHT,RH	ﾗﾊﾞｰ	1	[EXB][EXC][EXE][EXK][EXN]
6	239A5-12411		RUBBER,WEIGHT,LH	ﾗﾊﾞｰ	1	[EXB][EXC][EXE][EXK][EXN]
7	230C1-02041		COVER,AIR-INTAKE	ｶﾊﾞｰ	1	[EXB][EXC][EXE][EXK] (WITHOUT CAKB/EXB&C&E&K)
-	230C1-02041		COVER,AIR-INTAKE	ｶﾊﾞｰ	1	[EXN](WITHOUT CAKB/EXN)
8	01186-12025		BOLT	ﾎﾞﾙﾄ	4	[EXB][EXC][EXE][EXK][EXN]
9	514T2-72061		WIRE-HARNESS,R-COMB.	ﾜｲﾔﾊｰﾈｽ	2	[EXB][EXC][EXE][EXK][EXN]
10	22679-47301		GROMMET	ｸﾞﾛﾒｯﾄ	2	[EXB][EXC][EXE][EXK][EXN]
11	539A2-82251		SEAL,COVER	ｼｰﾙ	1	[EXB][EXC][EXE][EXK][EXN]

FIG.104 FRONT LAMP BRACKET

(F5015150) フロントランプブラケット

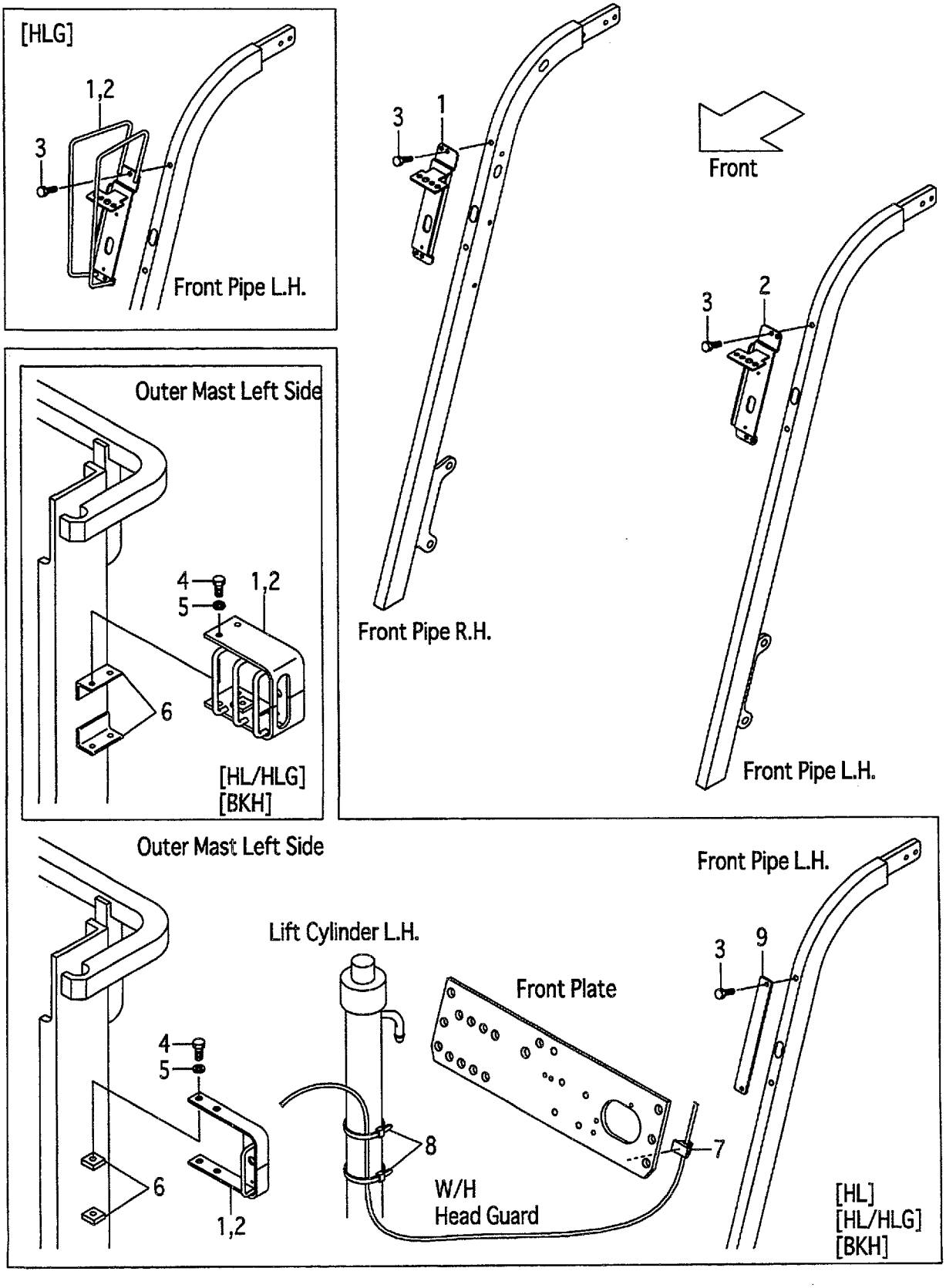

A:FG10C19 FG10T19 FG15C19 FG15T19 FG18C19 FG18T19
B:FD10C19 FD10T19 FD15C19 FD15T19 FD18C19 FD18T19

Item No	Part No.	Mark	Description	Req'd	Remarks : Serial No.
1	239A5-12501		BRACKET,HEAD-LAMP,RH ﾌﾞﾗｹｯﾄ	1	
-	539A5-12041		BRACKET,HEAD-LAMP,RH ﾌﾞﾗｹｯﾄ	1	[HLG]
-	534A9-22001		BRACKET,HEAD-LAMP,RH ﾌﾞﾗｹｯﾄ	1	[HL]
-	534A4-22001		BRACKET,HEAD-LAMP,RH ﾌﾞﾗｹｯﾄ	1	[HL/HLG][BKH]
2	239A5-12521		BRACKET,HEAD-LAMP,LH ﾌﾞﾗｹｯﾄ	1	
-	539A5-12011		BRACKET,HEAD-LAMP,LH ﾌﾞﾗｹｯﾄ	1	[HLG]
-	534A9-22011		BRACKET,HEAD-LAMP,LH ﾌﾞﾗｹｯﾄ	1	[HL]
-	534A4-22011		BRACKET,HEAD-LAMP,LH ﾌﾞﾗｹｯﾄ	1	[HL/HLG][BKH]
3	01183-08016		BOLT ﾎﾞﾙﾄ	4	
4	01100-12020		BOLT ﾎﾞﾙﾄ	4	[HL][HL/HLG][BKH]
5	02010-00012		WASHER ﾜｯｼｬ	4	[HL][HL/HLG][BKH]
6	534A9-22101		PLATE,TAPPED ﾌﾟﾚｰﾄ	4	[HL]
-	534A4-22101		BRACKET ﾌﾞﾗｹｯﾄ	4	[HL/HLG][BKH]
7	27732-42221		CLAMP,HARNESS ｸﾗﾝﾌﾟ	2	[HL][HL/HLG][BKH]
8	04913-11380		BAND,INSHULOCK ﾊﾞﾝﾄﾞ	4	[HL][HL/HLG][BKH]
9	534A9-22301		PLATE ﾌﾟﾚｰﾄ	2	[HL][HL/HLG][BKH]

FIG.105 REAR LAMP BRACKET

(F5015160) リヤーランプブラケット

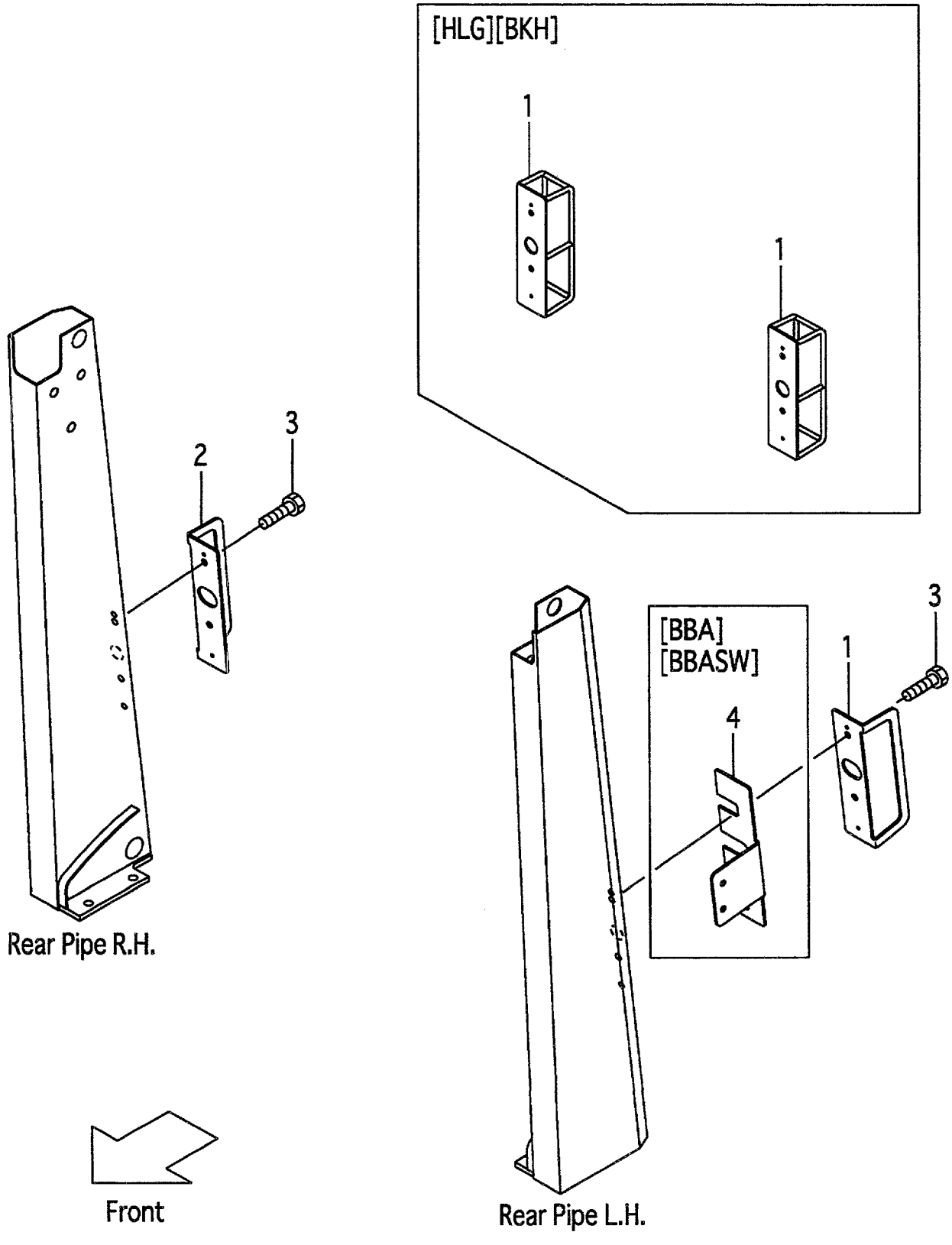

A:FG10C19 FG10T19 FG15C19 FG15T19 FG18C19 FG18T19
B:FD10C19 FD10T19 FD15C19 FD15T19 FD18C19 FD18T19

Item No	Part No.	Mark	Description	Req'd	Remarks : Serial No.
1	534A5-12321		GUARD,REAR-LAMP,LH ｶﾞｰﾄﾞ	1	(WITHOUT EXB&C&E&K&N)
-	524W5-13351		GUARD,REAR-LAMP ｶﾞｰﾄﾞ	2	[HLG][BKH]
2	534A5-12331		GUARD,REAR-LAMP,RH ｶﾞｰﾄﾞ	1	(WITHOUT EXB&C&E&K&N, HLG,BKH)
3	01183-08016		BOLT ﾎﾞﾙﾄ	4	(WITHOUT EXB&C&E&K&N)
4	539A1-32001		BRACKET ﾌﾞﾗｹｯﾄ	1	[BBA][BBASW]

FIG.106 HEAD GUARD PARTS

(F5015170) ﾍｯﾄﾞｶﾞｰﾄﾞﾊﾟｰﾂ

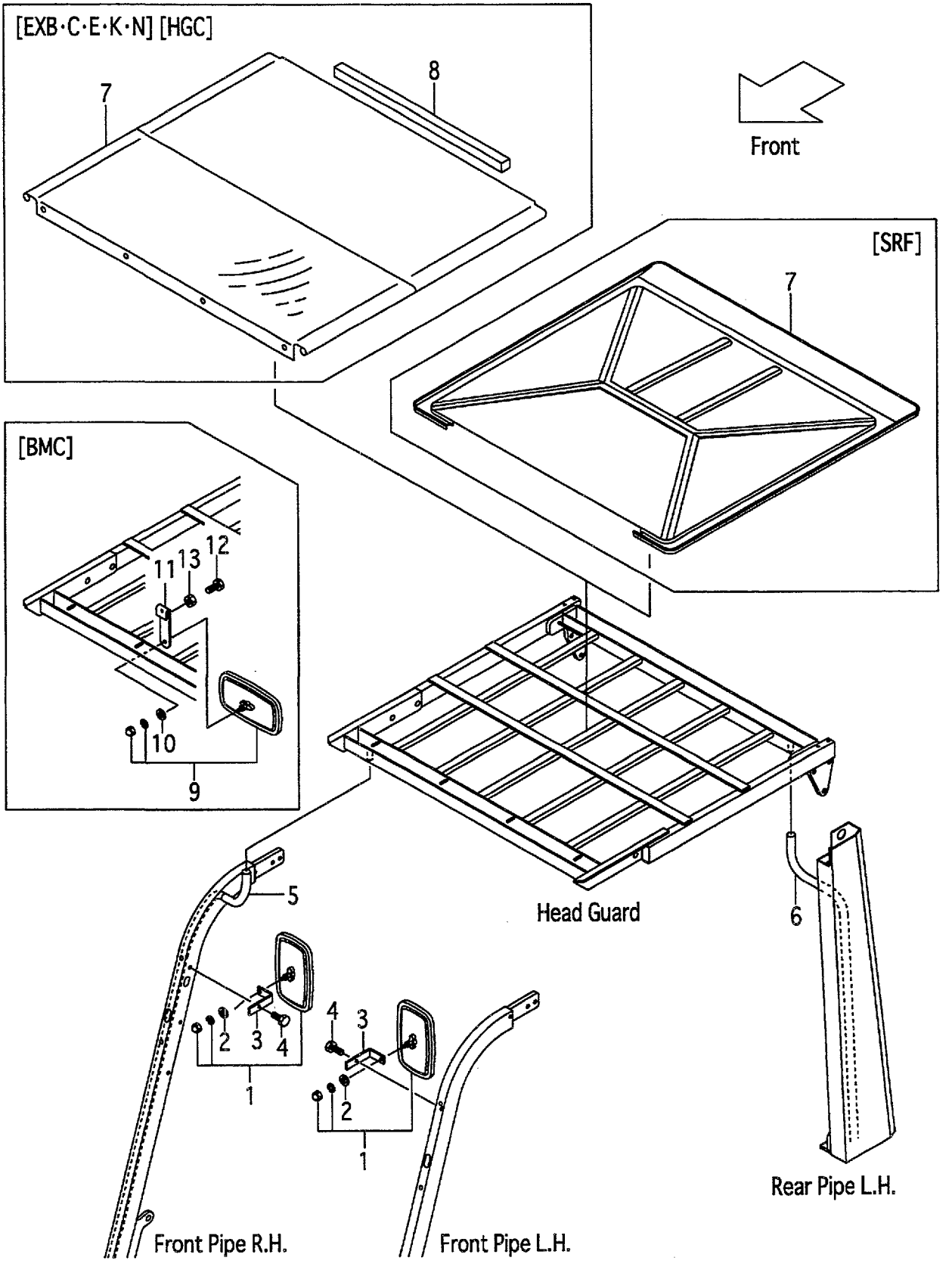

A:FG10C19 FG10T19 FG15C19 FG15T19 FG18C19 FG18T19
B:FD10C19 FD10T19 FD15C19 FD15T19 FD18C19 FD18T19

Item No	Part No.	Mark	Description		Req'd	Remarks : Serial No.
1	239A9-92001		MIRROR	ﾐﾗｰ	2	
2	222A9-32011		WASHER	ﾜｯｼｬ	2	
3	534A5-12571		BRACKET,BACK-MIRROR	ﾌﾞﾗｹｯﾄ	2	
4	514A5-12021		BOLT	ﾎﾞﾙﾄ	2	
5	516M5-12301		HOSE,VINYL	ﾎｰｽ	1	
-	516M5-12311		HOSE,VINYL	ﾎｰｽ	1	[EXB][EXC][EXE][EXK][HGH]
-	534A5-00411		HOSE,VINYL	ﾎｰｽ	1	[EXN][HGH060]
6	516G5-12511		HOSE,VINYL	ﾎｰｽ	1	
-	534A5-00401		HOSE,VINYL	ﾎｰｽ	1	[EXB][EXC][EXE][EXK][HGH]
-	516M5-12311		HOSE,VINYL	ﾎｰｽ	1	[EXN][HGH060]
7	539A5-12001		CANVAS	ｷｬﾝﾊﾞｽ	1	[EXB][EXC][EXE][EXK][EXN] (WITHOUT HGCZZZ/EX)
-	539A5-10501		ROOF,SUN	ﾙｰﾌ	1	[SRF]
-	539A5-12001		CANVAS	ｷｬﾝﾊﾞｽ	1	[HGC]
8	516G5-13511		SUPPORTER	ｻﾎﾟｰﾀ	1	[EXB][EXC][EXE][EXK][EXN] (WITHOUT HGCZZZ/EX)
-	516G5-13511		SUPPORTER	ｻﾎﾟｰﾀ	1	[HGC]
9	239A9-92001		MIRROR	ﾐﾗｰ	1	[BMC]
10	222A9-32011		WASHER	ﾜｯｼｬ	1	[BMC]
11	539A9-32001		BRACKET,BACK-MIRROR	ﾌﾞﾗｹｯﾄ	1	[BMC]
12	01100-08025		BOLT	ﾎﾞﾙﾄ	2	[BMC]
13	01402-00008		NUT	ﾅｯﾄ	2	[BMC]

FIG.107 ACCEL PEDAL (G-TYPE)

(F5015210) アクセルペダル

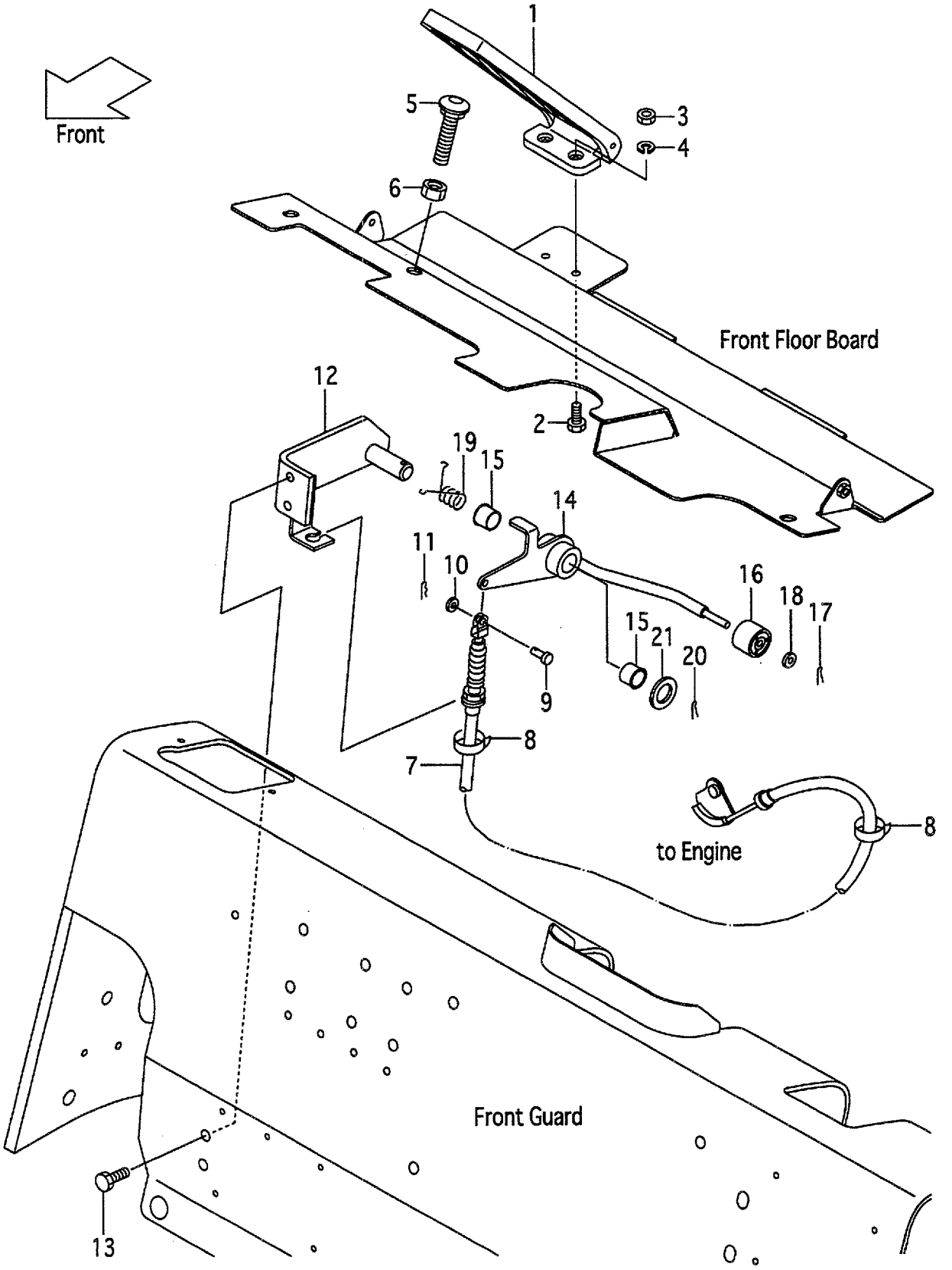

A:FG10C19 FG10T19 FG15C19 FG15T19 FG18C19 FG18T19

Item No	Part No.	Mark	Description		Req'd	Remarks : Serial No.
1	214A5-22051		PEDAL,ACCEL	ﾍﾟﾀﾞﾙ	1	
2	01100-06012		BOLT	ﾎﾞﾙﾄ	2	
3	01400-00006		NUT	ﾅｯﾄ	2	
4	02010-00006		WASHER	ﾜｯｼｬ	2	
5	27455-22011		BOLT,CAP-SQUARE-NECK	ﾎﾞﾙﾄ	1	
6	01400-00012		NUT	ﾅｯﾄ	1	
7	237A5-22101		WIRE,ACCEL	ﾜｲﾔ	1	
8	27042-42312		BAND,CABLE	ﾊﾞﾝﾄﾞ	2	
9	02262-06015		PIN,CLEVIS	ﾋﾟﾝ	1	
10	02000-00006		WASHER	ﾜｯｼｬ	1	
11	216G5-22081		PIN,SNAP	ﾋﾟﾝ	1	
12	239A5-20402		BRACKET,ACCEL-LINK	ﾌﾞﾗｹｯﾄ	1	
13	01183-08016		BOLT	ﾎﾞﾙﾄ	2	
A1	239A5-20302		LINK-ASSY,ACCEL	ｱｸｾﾙﾘﾝｸｱｯｾﾝ	1	INC.14-18
14	NO PART NO.	#	LINK,ACCEL	ﾘﾝｸ	1	
15	214A7-42071		BUSHING	ﾌﾞｯｼﾝｸﾞ	2	
16	214A5-22001		ROLLER	ﾛｰﾗ	1	
17	02200-16010		PIN,COTTER	ﾋﾟﾝ	1	
18	02000-00006		WASHER	ﾜｯｼｬ	1	
19	239A5-22252		SPRING	ｽﾌﾟﾘﾝｸﾞ	1	
20	02200-04025		PIN,COTTER	ﾋﾟﾝ	1	
21	02000-00016		WASHER	ﾜｯｼｬ	1	

FIG.108 ACCEL PEDAL (D-TYPE)

(F5015220) アクセルペダル

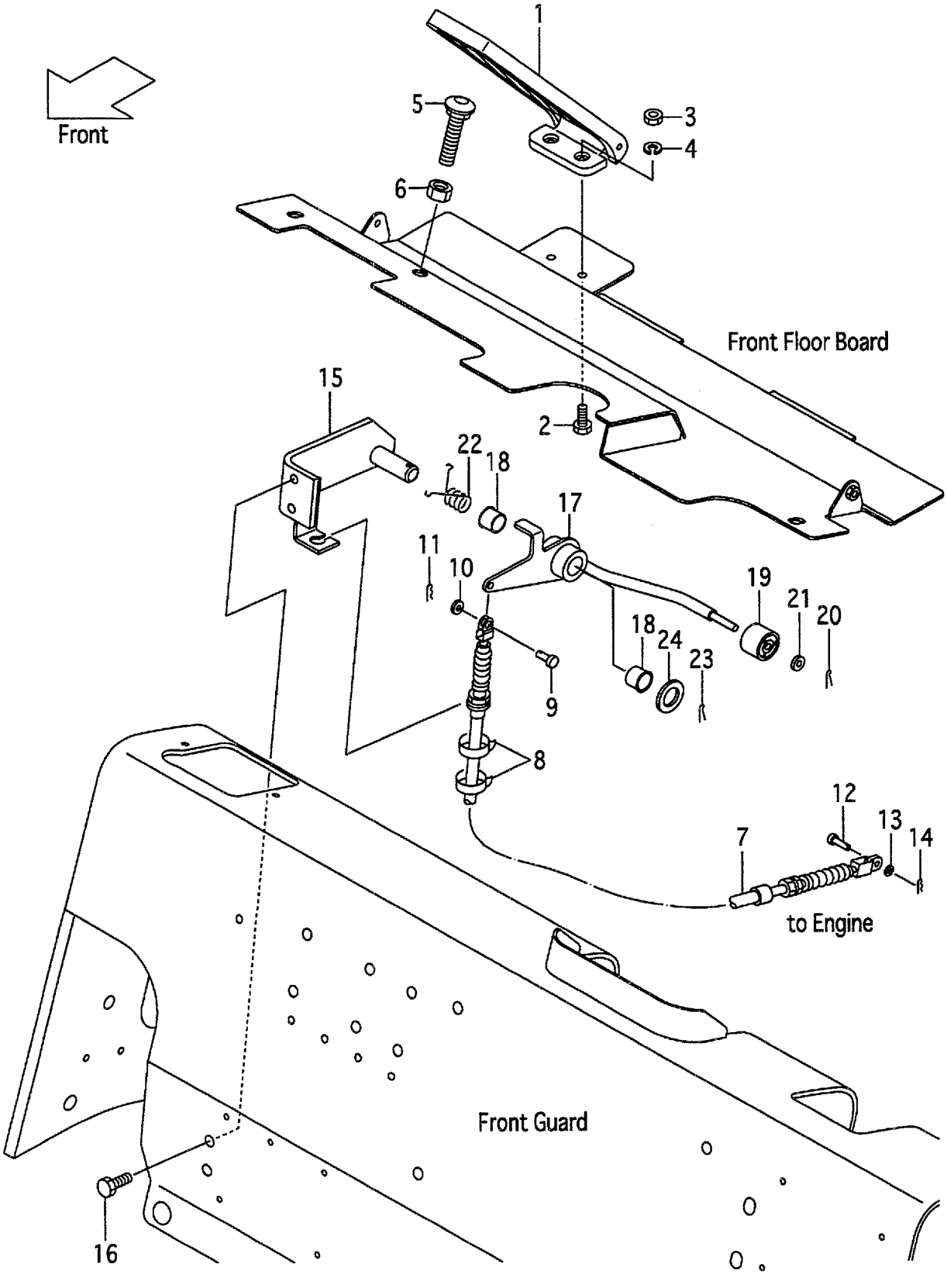

A:FD10C19 FD10T19 FD15C19 FD15T19 FD18C19 FD18T19

Item No	Part No.	Mark	Description		Req'd	Remarks : Serial No.
1	214A5-22051		PEDAL,ACCEL	ﾍﾟﾀﾞﾙ	1	
2	01100-06012		BOLT	ﾎﾞﾙﾄ	2	
3	01400-00006		NUT	ﾅｯﾄ	2	
4	02010-00006		WASHER	ﾜｯｼｬ	2	
5	216G5-22101		BOLT,CAP-SQUARE-NECK	ﾎﾞﾙﾄ	1	
6	01400-00012		NUT	ﾅｯﾄ	1	
7	238F5-22101		WIRE,ACCEL	ﾜｲﾔ	1	
8	27042-42312		BAND,CABLE	ﾊﾞﾝﾄﾞ	2	
9	02262-06015		PIN,CLEVIS	ﾋﾟﾝ	1	
10	02000-00006		WASHER	ﾜｯｼｬ	1	
11	216G5-22081		PIN,SNAP	ﾋﾟﾝ	1	
12	22717-40061		PIN,CLEVIS	ﾋﾟﾝ	1	
13	02000-00005		WASHER	ﾜｯｼｬ	1	
14	216G7-42161		PIN,SNAP	ﾋﾟﾝ	1	
15	239A5-20402		BRACKET,ACCEL-LINK	ﾌﾞﾗｹｯﾄ	1	
16	01183-08016		BOLT	ﾎﾞﾙﾄ	2	
A1	239A5-20302		LINK-ASSY,ACCEL	ｱｸｾﾙﾘﾝｸｱｯｾﾝ	1	INC.17-21
17	NO PART NO.	#	LINK,ACCEL	ﾘﾝｸ	1	
18	214A7-42071		BUSHING	ﾌﾞｯｼﾝｸﾞ	2	
19	214A5-22001		ROLLER	ﾛｰﾗ	1	
20	02200-16010		PIN,COTTER	ﾋﾟﾝ	1	
21	02000-00006		WASHER	ﾜｯｼｬ	1	
22	239A5-22252		SPRING	ｽﾌﾟﾘﾝｸﾞ	1	
23	02200-04025		PIN,COTTER	ﾋﾟﾝ	1	
24	02000-00016		WASHER	ﾜｯｼｬ	1	

FIG.109 FOOT PEDAL (C-TYPE)

(F5015410) ﾌｯﾄﾍﾟﾀﾞﾙ

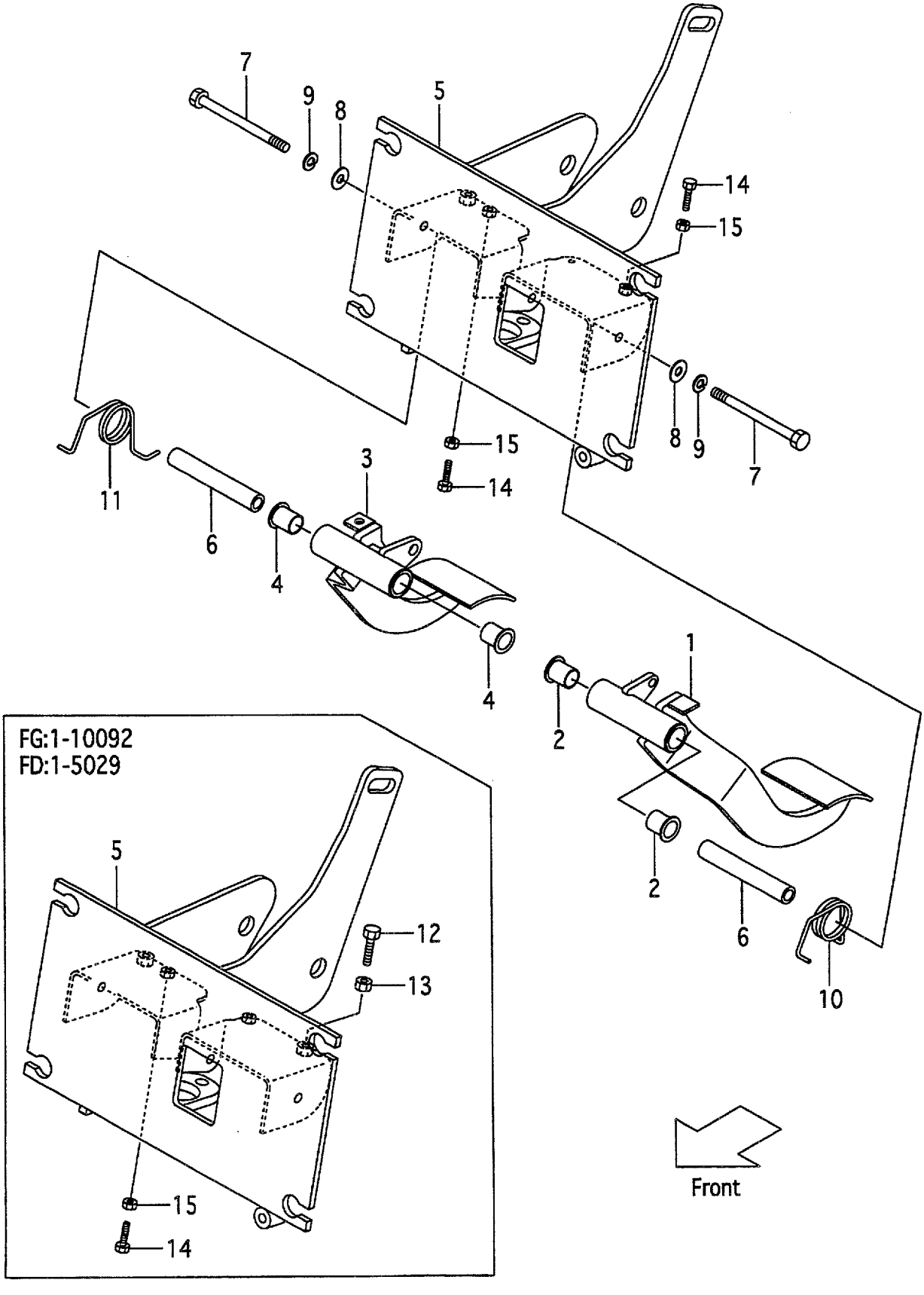

A:FG10C19 FG15C19 FG18C19
B:FD10C19 FD15C19 FD18C19

Item No	Part No.	Mark	Description		Req'd	Remarks : Serial No.
A1	239A5-40071		PEDAL-ASSY,CLUTCH	ｸﾗｯﾁﾍﾟﾀﾞﾙｱｯｾﾝ	1	INC.1,2
1	NO PART NO.	#	PEDAL,CLUTCH	ﾍﾟﾀﾞﾙ	1	
2	239B5-42221		BUSHING	ﾌﾞｯｼﾝｸﾞ	2	
A2	239A5-40061		PEDAL-ASSY,BRAKE	ﾌﾞﾚｰｷﾍﾟﾀﾞﾙｱｯｾﾝ	1	INC.3,4
3	NO PART NO.	#	PEDAL,BRAKE	ﾍﾟﾀﾞﾙ	1	
4	239B5-42221		BUSHING	ﾌﾞｯｼﾝｸﾞ	2	
5	239A5-40201		BRACKET,PEDAL	ﾌﾞﾗｹｯﾄ	1	
6	239B5-42231		SPACER	ｽﾍﾟｰｻ	2	
7	01103-10120		BOLT	ﾎﾞﾙﾄ	2	
8	02002-00010		WASHER	ﾜｯｼｬ	2	
9	02011-00010		WASHER	ﾜｯｼｬ	2	
10	239B5-42201		SPRING	ｽﾌﾟﾘﾝｸﾞ	1	
11	239B5-42211		SPRING	ｽﾌﾟﾘﾝｸﾞ	1	
12	01120-10035		BOLT	ﾎﾞﾙﾄ	1	A:1-10092 B:1-5029
13	01402-00010		NUT	ﾅｯﾄ	1	A:1-10092 B:1-5029
14	01120-08035		BOLT	ﾎﾞﾙﾄ	1	A:1-10092 B:1-5029
-	01120-08035		BOLT	ﾎﾞﾙﾄ	2	A:10093- B:5030-
15	01402-00008		NUT	ﾅｯﾄ	1	A:1-10092 B:1-5029
-	01402-00008		NUT	ﾅｯﾄ	2	A:10093- B:5030-

FIG.110 FOOT PEDAL (T-TYPE)

(F5015420) ﾌｯﾄﾍﾟﾀﾞﾙ

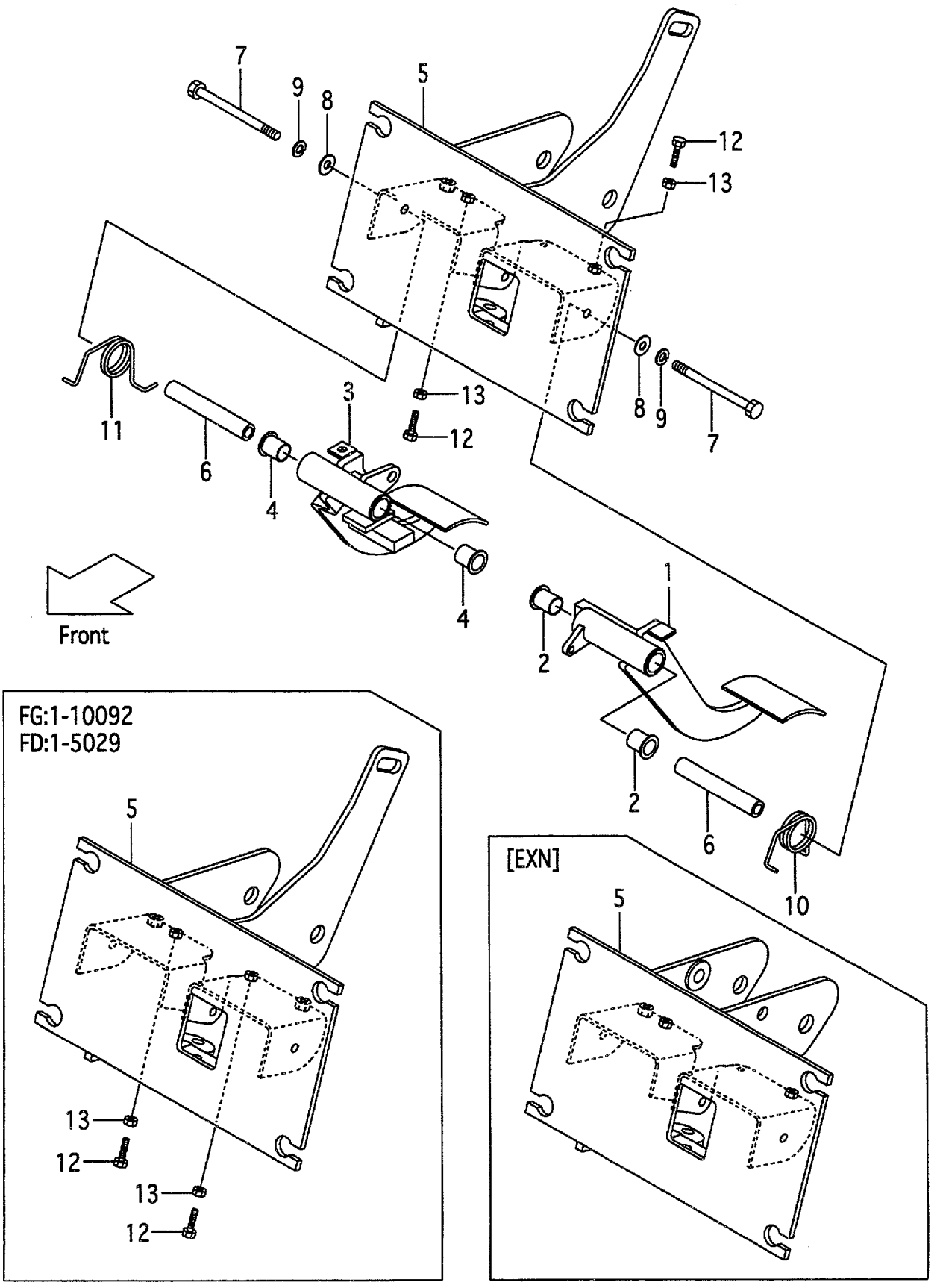

A:FG10T19 FG15T19 FG18T19
B:FD10T19 FD15T19 FD18T19

Item No	Part No.	Mark	Description		Req'd	Remarks : Serial No.
A1	239B5-40031		PEDAL-ASSY,INCHING	ｲﾝﾁﾝｸﾞﾍﾟﾀﾞﾙｱｯｾﾝ	1	INC.1,2
1	NO PART NO.	#	PEDAL,INCHING	ﾍﾟﾀﾞﾙ	1	
2	239B5-42221		BUSHING	ﾌﾞｯｼﾝｸﾞ	2	
A2	239B5-40021		PEDAL-ASSY,BRAKE	ﾌﾞﾚｰｷﾍﾟﾀﾞﾙｱｯｾﾝ	1	INC.3,4
3	NO PART NO.	#	PEDAL,BRAKE	ﾍﾟﾀﾞﾙ	1	
4	239B5-42221		BUSHING	ﾌﾞｯｼﾝｸﾞ	2	
5	239B5-40201		BRACKET,PEDAL	ﾌﾞﾗｹｯﾄ	1	
-	539B2-60201		BRACKET,PEDAL	ﾌﾞﾗｹｯﾄ	1	[EXN]
6	239B5-42231		SPACER	ｽﾍﾟｰｻ	2	
7	01103-10120		BOLT	ﾎﾞﾙﾄ	2	
8	02002-00010		WASHER	ﾜｯｼｬ	2	
9	02011-00010		WASHER	ﾜｯｼｬ	2	
10	239B5-42201		SPRING	ｽﾌﾟﾘﾝｸﾞ	1	
11	239B5-42211		SPRING	ｽﾌﾟﾘﾝｸﾞ	1	
12	01120-08035		BOLT	ﾎﾞﾙﾄ	2	
13	01402-00008		NUT	ﾅｯﾄ	2	

FIG.111 FOOT PEDAL (C-TYPE):[PC]

(F50154A0) ﾌｯﾄﾍﾟﾀﾞﾙ

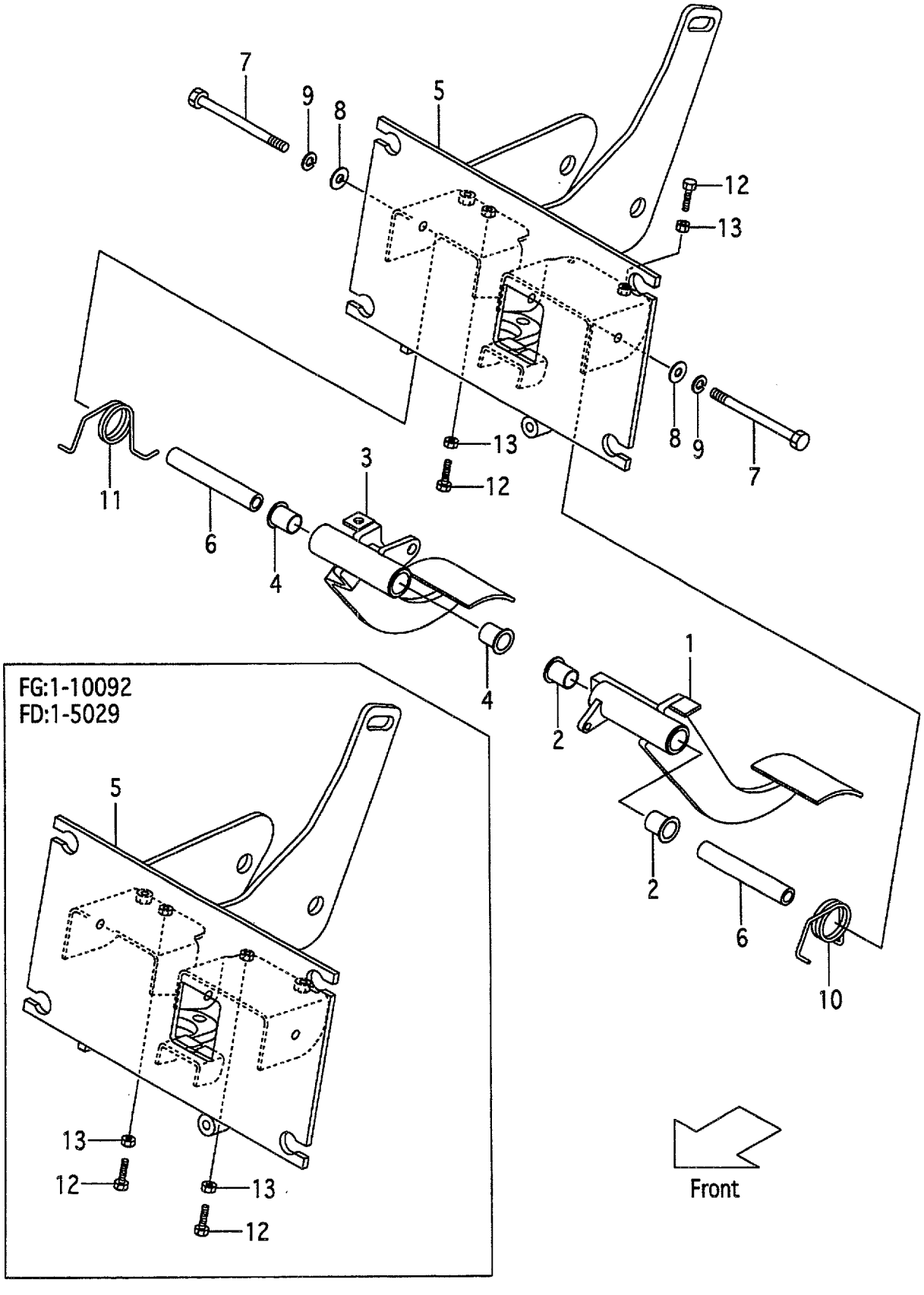

A:FG10C19 FG15C19 FG18C19
B:FD10C19 FD15C19 FD18C19

FIG.111
(F50154A0)

Item No	Part No.	Mark	Description		Req'd	Remarks : Serial No.
A1	239H5-40411		PEDAL-ASSY,INCHING	ｲﾝﾁﾝｸﾞﾍﾟﾀﾞﾙｱｯｾﾝ	1	[PC] INC.1,2
1	NO PART NO.	#	PEDAL,INCHING	ﾍﾟﾀﾞﾙ	1	[PC]
2	239B5-42221		BUSHING	ﾌﾞｯｼﾝｸﾞ	2	[PC]
A2	239A5-40061		PEDAL-ASSY,BRAKE	ﾌﾞﾚｰｷﾍﾟﾀﾞﾙｱｯｾﾝ	1	[PC] INC.3,4
3	NO PART NO.	#	PEDAL,BRAKE	ﾍﾟﾀﾞﾙ	1	[PC]
4	239B5-42221		BUSHING	ﾌﾞｯｼﾝｸﾞ	2	[PC]
5	239H5-40221		BRACKET,PEDAL	ﾌﾞﾗｹｯﾄ	1	[PC]
6	239B5-42231		SPACER	ｽﾍﾟｰｻ	2	[PC]
7	01103-10120		BOLT	ﾎﾞﾙﾄ	2	[PC]
8	02002-00010		WASHER	ﾜｯｼｬ	2	[PC]
9	02011-00010		WASHER	ﾜｯｼｬ	2	[PC]
10	239B5-42201		SPRING	ｽﾌﾟﾘﾝｸﾞ	1	[PC]
11	239B5-42211		SPRING	ｽﾌﾟﾘﾝｸﾞ	1	[PC]
12	01120-08035		BOLT	ﾎﾞﾙﾄ	2	[PC]
13	01402-00008		NUT	ﾅｯﾄ	2	[PC]

FIG.112 FOOT PEDAL CYLINDER (C-TYPE)

(F5015430) ﾌｯﾄﾍﾟﾀﾞﾙｼﾘﾝﾀﾞ

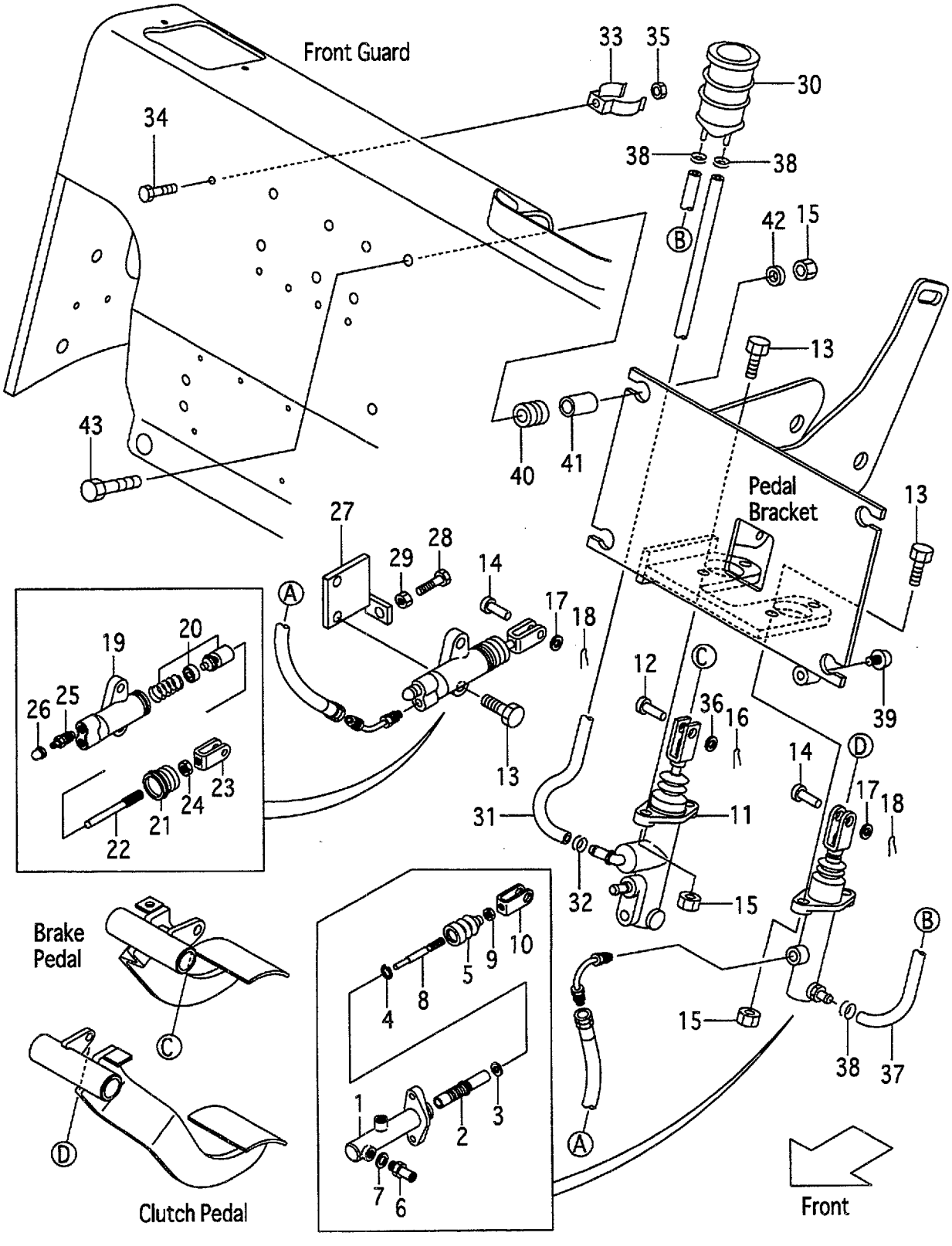

A:FG10C19 FG15C19 FG18C19
B:FD10C19 FD15C19 FD18C19

Item No	Part No.	Mark	Description		Req'd	Remarks : Serial No.
A1	239A5-40501		CYL,CLUTCH-MASTER	ｼﾘﾝﾀﾞｱｯｾﾝ	1	INC.1-10
1	NO PART NO.	#	BODY,CYL	ﾎﾞﾃﾞｨ	1	
2	216G5-32221	*	PISTON	ﾋﾟｽﾄﾝ	1	
3	216G5-32311	*	PLATE,PISTON-STOPPER	ﾌﾟﾚｰﾄ	1	
4	25595-42311	*	RING,SNAP	ｽﾅｯﾌﾟﾘﾝｸﾞ	1	
5	216G5-32321	*	BOOT	ﾌﾞｰﾂ	1	
6	216G5-32331		UNION	ﾕﾆｵﾝ	1	
7	216G5-32341		GASKET	ｶﾞｽｹｯﾄ	1	
8	NO PART NO.	#	ROD,PUSH	ﾛｯﾄﾞ	1	
9	01402-00008		NUT	ﾅｯﾄ	1	
10	25595-42452		CLEVIS	ｸﾚﾋﾞｽ	1	
11	239A5-40101		CYL,BRAKE-MASTER	ｼﾘﾝﾀﾞ	1	A:1-10137 B:1-5044 SEE FIG.119
-	239A5-40102		CYL,BRAKE-MASTER	ｼﾘﾝﾀﾞ	1	A:10138- B:5045- SEE FIG.119A
12	02262-10030		PIN,CLEVIS	ﾋﾟﾝ	1	
13	01184-10030		BOLT	ﾎﾞﾙﾄ	6	
14	02262-08025		PIN,CLEVIS	ﾋﾟﾝ	2	
15	01400-00010		NUT	ﾅｯﾄ	8	
16	02200-32025		PIN,COTTER	ﾋﾟﾝ	1	
17	02000-00008		WASHER	ﾜｯｼｬ	2	
18	02200-02020		PIN,COTTER	ﾋﾟﾝ	2	
A2	214A5-32312		CYL,CLUTCH-RELEASE	ｼﾘﾝﾀﾞｱｯｾﾝ	1	INC.19-26
19	NO PART NO.	#	BODY,CYL	ﾎﾞﾃﾞｨ	1	
20	NO PART NO.	##	PISTON	ﾋﾟｽﾄﾝ	1	
21	NO PART NO.	##	BOOT	ﾌﾞｰﾂ	1	
A3	214A5-33052		ROD-ASSY,PUSH	ﾌﾟｯｼｭﾛｯﾄﾞｱｯｾﾝ	1	INC.22-24
22	214A5-33062		ROD,PUSH	ﾛｯﾄﾞ	1	
23	25595-42452		CLEVIS	ｸﾚﾋﾞｽ	1	
24	01402-00008		NUT	ﾅｯﾄ	1	
25	214A5-33031		VALVE,BLEEDER	ﾊﾞﾙﾌﾞ	1	
26	214A5-33041		CAP,BLEEDER	ｷｬｯﾌﾟ	1	
27	214A5-32101		BRACKET,RELEASE-CYL	ﾌﾞﾗｹｯﾄ	1	
28	01100-10030		BOLT	ﾎﾞﾙﾄ	1	
29	01402-00010		NUT	ﾅｯﾄ	1	
30	216G5-42011		TANK,RESERVE	ﾀﾝｸ	1	
31	239A5-42411		HOSE,RESERVE	ﾎｰｽ	1	
32	25595-42491		CLIP,HOSE	ｸﾘｯﾌﾟ	1	
33	224G5-42061		CLIP,RESERVE-TANK	ｸﾘｯﾌﾟ	1	
34	239A5-42381		BOLT	ﾎﾞﾙﾄ	1	
35	01400-00006		NUT	ﾅｯﾄ	1	
36	02000-00010		WASHER	ﾜｯｼｬ	1	
37	239A5-42401		HOSE,RESERVE	ﾎｰｽ	1	
38	25785-43091		CLIP,HOSE	ｸﾘｯﾌﾟ	3	
39	23456-42181		STOPPER	ｽﾄｯﾊﾟ	1	
40	216G6-42031		RUBBER,MOUNT	ﾗﾊﾞｰ	4	
41	239B5-42721		COLLAR	ｶﾗｰ	4	
42	22252-32251		WASHER	ﾜｯｼｬ	4	

FIG.112 FOOT PEDAL CYLINDER (C-TYPE)

(F5015430) ﾌｯﾄﾍﾟﾀﾞﾙｼﾘﾝﾀﾞ

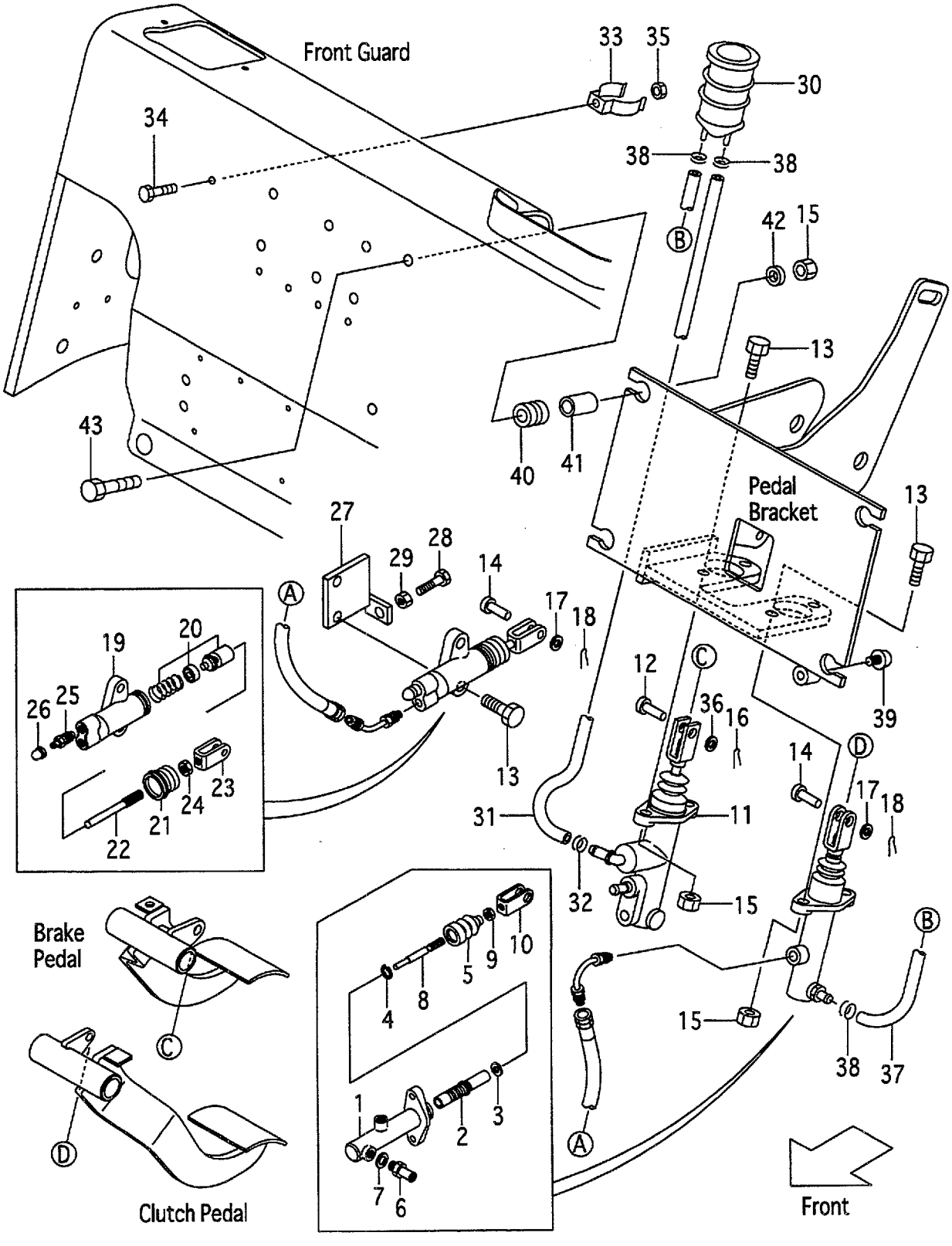

A:FG10C19 FG15C19 FG18C19
B:FD10C19 FD15C19 FD18C19

Item No	Part No.	Mark	Description		Req'd	Remarks : Serial No.
43	216G6-43241		BOLT	ﾎﾞﾙﾄ	4	
K1	216G5-32201		KIT,REPAIR	ﾘﾍﾟｱｷｯﾄ	1	INC.2-5
K2	214A5-33012		KIT,REPAIR	ﾘﾍﾟｱｷｯﾄ	1	INC.20,21

FIG.113 FOOT PEDAL CYLINDER (T-TYPE)

(F5015440) ﾌｯﾄﾍﾟﾀﾞﾙｼﾘﾝﾀﾞ

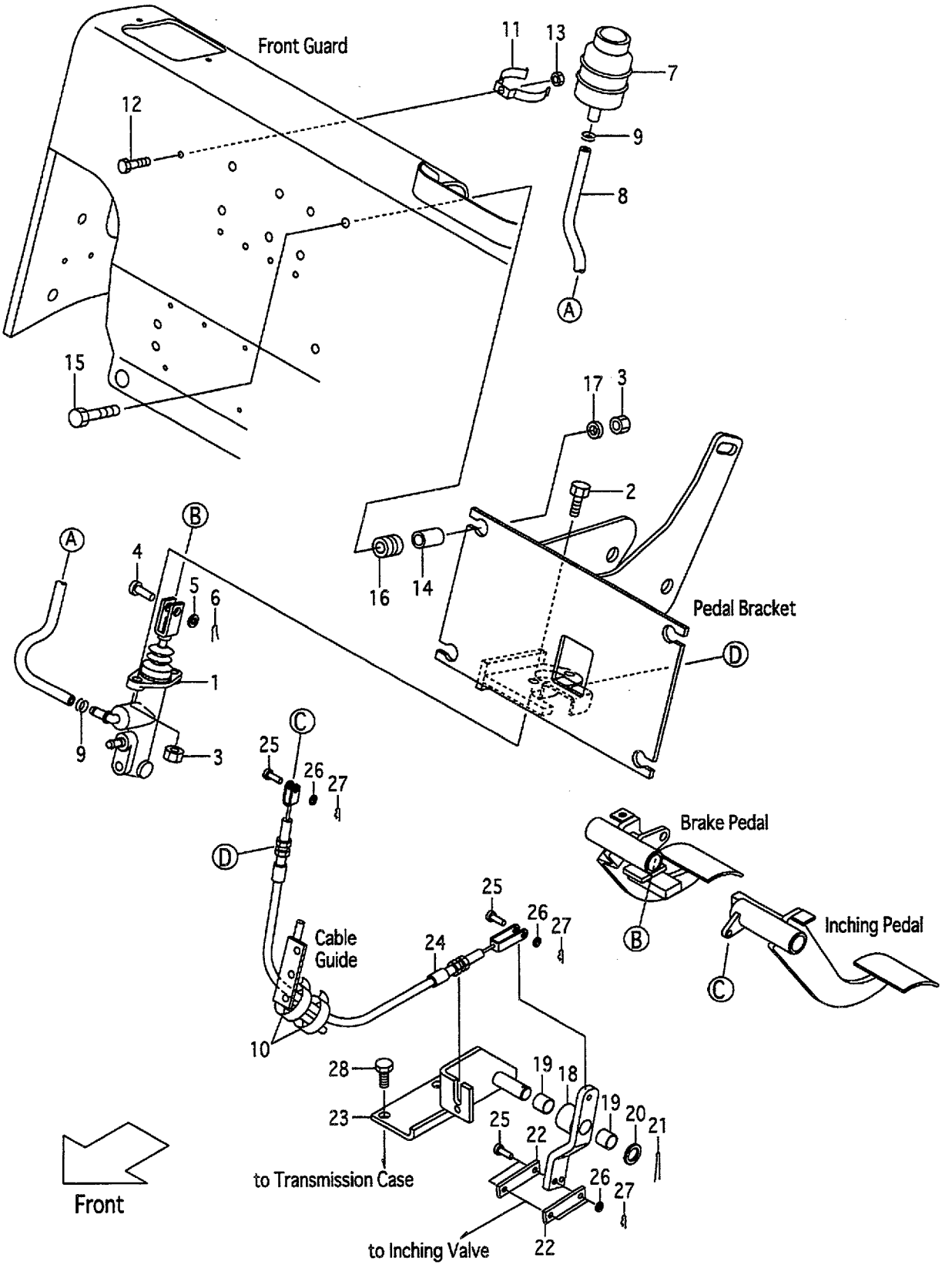

A:FG10T19 FG15T19 FG18T19
B:FD10T19 FD15T19 FD18T19

Item No	Part No.	Mark	Description		Req'd	Remarks : Serial No.
1	239A5-40101		CYL,BRAKE-MASTER	ｼﾘﾝﾀﾞ	1	A:1-10137 B:1-5044 SEE FIG.119
-	239A5-40102		CYL,BRAKE-MASTER	ｼﾘﾝﾀﾞ	1	A:10138- B:5045- SEE FIG.119A
2	01184-10030		BOLT	ﾎﾞﾙﾄ	2	
3	01400-00010		NUT	ﾅｯﾄ	6	
4	02262-10030		PIN,CLEVIS	ﾋﾟﾝ	1	
5	02000-00010		WASHER	ﾜｯｼｬ	1	
6	02200-32025		PIN,COTTER	ﾋﾟﾝ	1	
7	23775-42101		TANK,RESERVE	ﾀﾝｸ	1	
8	22655-42591		HOSE	ﾎｰｽ	1	
9	25595-42491		CLIP,HOSE	ｸﾘｯﾌﾟ	2	
10	04913-11200		BAND	ﾊﾞﾝﾄﾞ	2	
11	224G5-42061		CLIP,RESERVE-TANK	ｸﾘｯﾌﾟ	1	
12	239A5-42381		BOLT	ﾎﾞﾙﾄ	1	
13	01400-00006		NUT	ﾅｯﾄ	1	
14	239B5-42721		COLLAR	ｶﾗｰ	4	
15	216G6-43241		BOLT	ﾎﾞﾙﾄ	4	
16	216G6-42031		RUBBER,MOUNT	ﾗﾊﾞｰ	4	
17	22252-32251		WASHER	ﾜｯｼｬ	4	
A1	218H5-40521		LINK-ASSY	ﾘﾝｸｱｯｾﾝ	1	INC.18,19
18	NO PART NO.	#	LINK	ﾘﾝｸ	1	
19	23647-40121		BUSHING	ﾌﾞｯｼﾝｸﾞ	2	
20	02000-00016		WASHER	ﾜｯｼｬ	1	
21	02200-04025		PIN,COTTER	ﾋﾟﾝ	1	
22	218H5-42521		PLATE	ﾌﾟﾚｰﾄ	2	
23	218H5-40501		BRACKET,LINK	ﾌﾞﾗｹｯﾄ	1	
24	239B5-42501		CABLE,INCHING	ｹｰﾌﾞﾙ	1	
25	02262-06025		PIN,CLEVIS	ﾋﾟﾝ	4	
26	02000-00006		WASHER	ﾜｯｼｬ	4	
27	216G5-22081		PIN,SNAP	ﾋﾟﾝ	4	
28	01184-10020		BOLT	ﾎﾞﾙﾄ	2	

FIG.114 FOOT PEDAL CYLINDER (C-TYPE):[PC]

(F50154C0) ﾌｯﾄﾍﾟﾀﾞﾙｼﾘﾝﾀﾞ

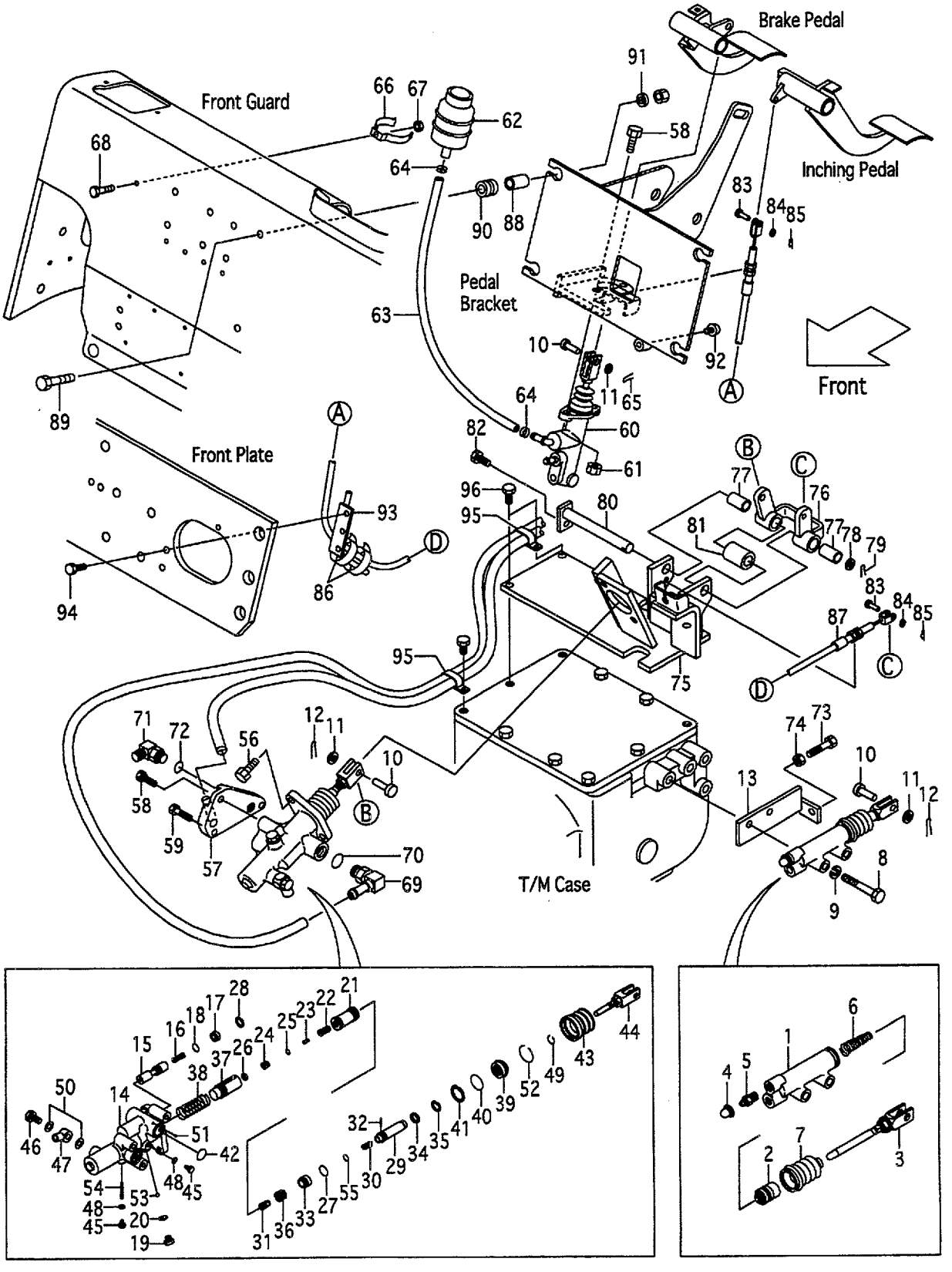

A:FG10C19 FG15C19 FG18C19
B:FD10C19 FD15C19 FD18C19

FIG.114
(F50154C0)

Item No	Part No.	Mark	Description		Req'd	Remarks : Serial No.
A1	522A2-10401		CYL,CLUTCH-RELEASE	ｼﾘﾝﾀﾞｱｯｾﾝ	1	[PC] INC.1-7
1	NO PART NO.	#	BODY,CYL	ﾎﾞﾃﾞｨ	1	[PC]
2	522A2-18541	*	PISTON,RELEASE-CYL	ﾋﾟｽﾄﾝ	1	[PC]
3	522A2-18551		ROD,PUSH	ﾛｯﾄﾞ	1	[PC]
4	522A2-18561	*	CAP,BLEEDER-PLUG	0	1	[PC]
5	522A2-18571		PLUG,BLEEDER	ﾌﾟﾗｸﾞ	1	[PC]
6	522A2-18581	*	SPRING,CONICAL	ｽﾌﾟﾘﾝｸﾞ	1	[PC]
7	522A2-18591	*	BOOT	ﾌﾞｰﾂ	1	[PC]
8	01103-10060		BOLT	ﾎﾞﾙﾄ	2	[PC]
9	02010-00010		WASHER	ﾜｯｼｬ	2	[PC]
10	02262-10030		PIN,CLEVIS	ﾋﾟﾝ	3	[PC]
11	02000-00010		WASHER	ﾜｯｼｬ	3	[PC]
12	02200-32020		PIN,COTTER	ﾋﾟﾝ	2	[PC]
13	214L5-32101		BRACKET,RELEASE-CYL	ﾌﾞﾗｹｯﾄ	1	[PC]
A2	234H5-30201		BOOSTER-ASSY,CLUTCH	ｸﾗｯﾁﾌﾞｰｽﾀｱｯｾﾝ	1	[PC] INC.14-55
14	NO PART NO.	#	BODY,BOOSTER	ﾎﾞﾃﾞｨ	1	[PC]
15	234H5-32411		SPOOL,FLOW-DIVIDER	ｽﾌﾟｰﾙ	1	[PC]
16	522A2-18011		SPRING,FLOW-DIVIDER	ｽﾌﾟﾘﾝｸﾞ	1	[PC]
17	522A2-18021		PLUG	ﾌﾟﾗｸﾞ	1	[PC]
18	522A2-18031	*	O-RING	Oﾘﾝｸﾞ	1	[PC]
19	522A2-18041		PLUG	ﾌﾟﾗｸﾞ	1	[PC]
20	522A2-18051	*	GASKET	ｶﾞｽｹｯﾄ	1	[PC]
21	522A2-18061	*	PISTON,POWER	ﾋﾟｽﾄﾝ	1	[PC]
22	522A2-18071		VALVE,CONTROL	ﾊﾞﾙﾌﾞ	1	[PC]
23	522A2-18081		SPRING,CONTROL-VALVE	ｽﾌﾟﾘﾝｸﾞ	1	[PC]
24	522A2-18091		PLUG,PISTON	ﾌﾟﾗｸﾞ	1	[PC]
25	522A2-18101	*	O-RING	Oﾘﾝｸﾞ	1	[PC]
26	522A2-18111	*	RING,SNAP	ｽﾅｯﾌﾟﾘﾝｸﾞ	1	[PC]
27	522A2-18121	*	O-RING	Oﾘﾝｸﾞ	1	[PC]
28	522A2-18131	*	RING,SNAP	ｽﾅｯﾌﾟﾘﾝｸﾞ	1	[PC]
29	234H5-32421		PISTON,REACTION	ﾋﾟｽﾄﾝ	1	[PC]
30	224W5-32421		SPRING,RELIEF-VALVE	ｽﾌﾟﾘﾝｸﾞ	1	[PC]
31	522A2-18161		SEAT,CONTROL-VALVE	ｼｰﾄ	1	[PC]
32	522A2-18171	*	PIN	ﾋﾟﾝ	1	[PC]
33	234H5-32431		PISTON,REACTION	ﾋﾟｽﾄﾝ	1	[PC]
34	522A2-18201		WASHER	ﾜｯｼｬ	1	[PC]
35	522A2-18211	*	RING,SNAP	ｽﾅｯﾌﾟﾘﾝｸﾞ	1	[PC]
36	522A2-18221		SPRING,RETURN,VALVE	ｽﾌﾟﾘﾝｸﾞ	1	[PC]
37	522A2-18231	*	PISTON,MASTER-CYL	ﾋﾟｽﾄﾝ	1	[PC]
38	522A2-18241		SPRING,RETURN,PISTON	ｽﾌﾟﾘﾝｸﾞ	1	[PC]
39	522A2-18251	*	GUIDE,REACTION	ｶﾞｲﾄﾞ	1	[PC]
40	522A2-18261	*	O-RING	Oﾘﾝｸﾞ	1	[PC]
41	522A2-18271	*	RING,SNAP	ｽﾅｯﾌﾟﾘﾝｸﾞ	1	[PC]
42	522A2-18281	*	O-RING	Oﾘﾝｸﾞ	2	[PC]
43	522A2-18291	*	BOOT	ﾌﾞｰﾂ	1	[PC]
44	522A2-18301		ROD,PUSH	ﾛｯﾄﾞ	1	[PC]
45	522A2-18311		BOLT	ﾎﾞﾙﾄ	2	[PC]
46	522A2-18341		BOLT,UNION	ﾎﾞﾙﾄ	1	[PC]
47	522A2-18352		UNION	ﾕﾆｵﾝ	1	[PC]
48	522A2-18321	*	GASKET	ｶﾞｽｹｯﾄ	2	[PC]

FIG.114 FOOT PEDAL CYLINDER (C-TYPE):[PC]

(F50154C0) ﾌｯﾄﾍﾟﾀﾞﾙｼﾘﾝﾀﾞ

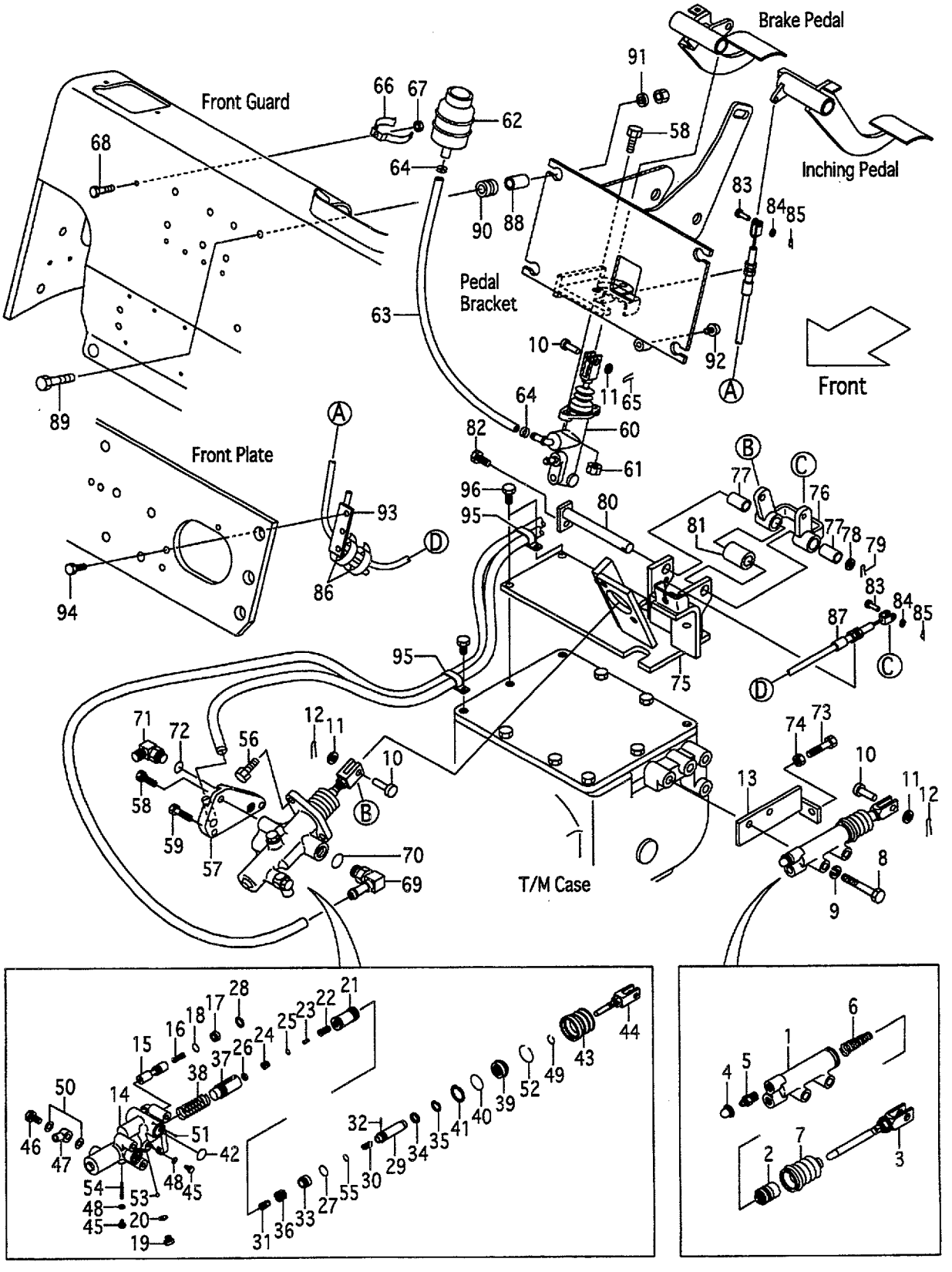

A:FG10C19 FG15C19 FG18C19
B:FD10C19 FD15C19 FD18C19

Item No	Part No.	Mark	Description		Req'd	Remarks : Serial No.
49	522A2-18331	*	RING,SNAP	ｽﾅｯﾌﾟﾘﾝｸﾞ	1	[PC]
50	522A2-18361	*	GASKET	ｶﾞｽｹｯﾄ	2	[PC]
51	522A2-18371	*	BALL	ﾎﾞｰﾙ	1	[PC]
52	522A2-18381	*	RING,SNAP	ｽﾅｯﾌﾟﾘﾝｸﾞ	1	[PC]
53	522A2-18391	*	BALL	ﾎﾞｰﾙ	1	[PC]
54	522A2-18401	*	PIN	ﾋﾟﾝ	1	[PC]
55	234H5-32441	*	O-RING	Oﾘﾝｸﾞ	1	[PC]
56	01184-10025		BOLT	ﾎﾞﾙﾄ	2	[PC]
57	524G2-12151		ADAPTER	ｱﾀﾞﾌﾟﾀ	1	[PC]
58	01184-10030		BOLT	ﾎﾞﾙﾄ	3	[PC]
59	01184-10055		BOLT	ﾎﾞﾙﾄ	2	[PC]
60	239A5-40101		CYL,BRAKE-MASTER	ｼﾘﾝﾀﾞ	1	A:1-10137 B:1-5044 [PC]SEE FIG.119
-	239A5-40102		CYL,BRAKE-MASTER	ｼﾘﾝﾀﾞ	1	A:10138- B:5045- [PC]SEE FIG.119A
61	01400-00010		NUT	ﾅｯﾄ	2	[PC]
62	23775-42101		TANK,RESERVE	ﾀﾝｸ	1	[PC]
63	22655-42591		HOSE,RESERVE	ﾎｰｽ	1	[PC]
64	25595-42491		CLIP,HOSE	ｸﾘｯﾌﾟ	2	[PC]
65	02200-32025		PIN,COTTER	ﾋﾟﾝ	1	[PC]
66	224G5-42061		CLIP,RESERVE-TANK	ｸﾘｯﾌﾟ	1	[PC]
67	01400-00006		NUT	ﾅｯﾄ	1	[PC]
68	239A5-42381		BOLT	ﾎﾞﾙﾄ	1	[PC]
A3	224W7-60311		FITTING-ASSY,HOSE	ﾎｰｽﾌｨｯﾃｨﾝｸﾞｱｯｾﾝ	1	[PC] INC.69,70
69	NO PART NO.	*	FITTING,HOSE	ﾌｨｯﾃｨﾝｸﾞ	1	[PC]
70	89140-00006		O-RING	Oﾘﾝｸﾞ	1	[PC]
A4	04150-20202		ELBOW-ASSY	ｴﾙﾎﾞｱｯｾﾝ	1	[PC] INC.71,72
71	NO PART NO.	*	ELBOW	ｴﾙﾎﾞ	1	[PC]
72	03320-00110		O-RING	Oﾘﾝｸﾞ	1	[PC]
73	01100-10030		BOLT	ﾎﾞﾙﾄ	1	[PC]
74	01402-00010		NUT	ﾅｯﾄ	1	[PC]
A5	219S5-40301		BRACKET-ASSY,BOOSTER	ﾌﾞﾗｹｯﾄｱｯｾﾝ	1	[PC] INC.75-82
75	219S5-40201		BRACKET,BOOSTER	ﾌﾞﾗｹｯﾄ	1	[PC]
A6	239H5-40211		LINK-ASSY	ﾘﾝｸｱｯｾﾝ	1	[PC] INC.76,77
76	239H5-42301		LINK	ﾘﾝｸ	1	[PC]
77	256C7-42281		BUSHING	ﾌﾞｯｼﾝｸﾞ	2	[PC]
78	02000-00016		WASHER	ﾜｯｼｬ	1	[PC]
79	02200-04025		PIN,COTTER	ﾋﾟﾝ	1	[PC]
80	239H5-40311		SHAFT	ｼｬﾌﾄ	1	[PC]
81	239H5-42371		SPACER	ｽﾍﾟｰｻ	1	[PC]
82	01183-08016		BOLT	ﾎﾞﾙﾄ	1	[PC]
83	02262-08020		PIN,CLEVIS	ﾋﾟﾝ	2	[PC]
84	02000-00008		WASHER	ﾜｯｼｬ	2	[PC]
85	02200-02016		PIN,COTTER	ﾋﾟﾝ	2	[PC]
86	04913-11200		BAND	ﾊﾞﾝﾄﾞ	2	[PC]
87	239H5-42451		CABLE,INCHING	ｹｰﾌﾞﾙ	1	[PC]
88	239B5-42721		COLLAR	ｶﾗｰ	4	[PC]
89	216G6-43241		BOLT	ﾎﾞﾙﾄ	4	[PC]

FIG.114 FOOT PEDAL CYLINDER (C-TYPE):[PC]

(F50154C0) ﾌｯﾄﾍﾟﾀﾞﾙｼﾘﾝﾀﾞ

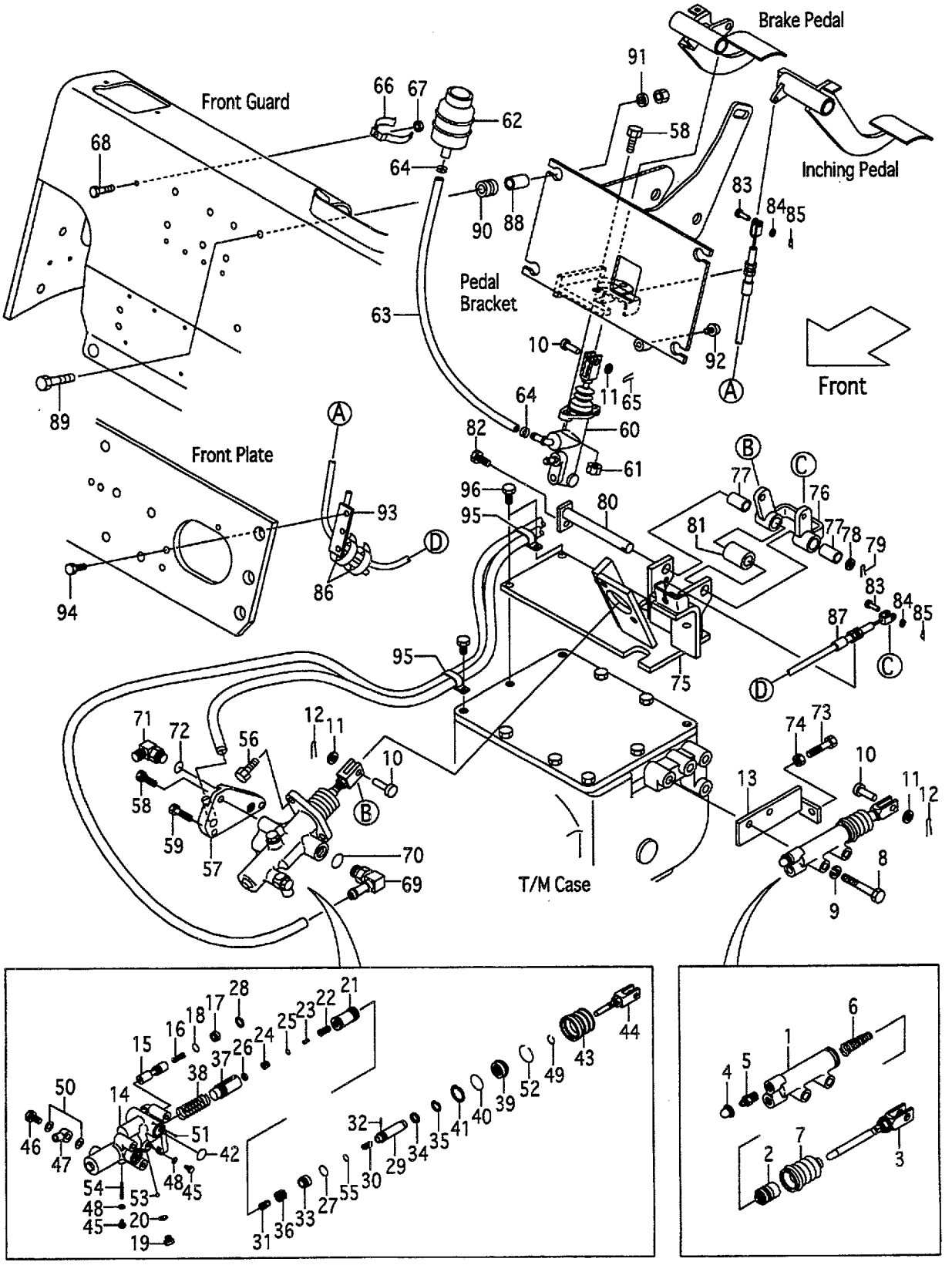

A:FG10C19 FG15C19 FG18C19
B:FD10C19 FD15C19 FD18C19

Item No	Part No.	Mark	Description		Req'd	Remarks : Serial No.
90	216G6-42031		RUBBER,MOUNT	ﾗﾊﾞｰ	4	[PC]
91	22252-32251		WASHER	ﾜｯｼｬ	4	[PC]
92	23456-42181		STOPPER	ｽﾄｯﾊﾟ	1	[PC]
93	239A5-42351		GUIDE,CABLE	ｶﾞｲﾄﾞ	1	[PC]
94	216H3-92291		BOLT	ﾎﾞﾙﾄ	2	[PC]
95	214A2-42331		CLIP	ｸﾘｯﾌﾟ	2	[PC]
96	01184-10030		BOLT	ﾎﾞﾙﾄ	3	[PC]
K1	522A2-11601		KIT,OVERHAUL	ｵｰﾊﾞｰﾎｰﾙｷｯﾄ	1	[PC] INC.2,4,6,7
K2	234H5-32401		KIT,OVERHAUL	ｵｰﾊﾞｰﾎｰﾙｷｯﾄ	1	[PC] INC.18,20,21,25-28,32,35, 37,39-43,48-55

FIG.115 BRAKE PIPE (C-TYPE)

(F5015450) ﾌﾞﾚｰｷﾊﾟｲﾌﾟ

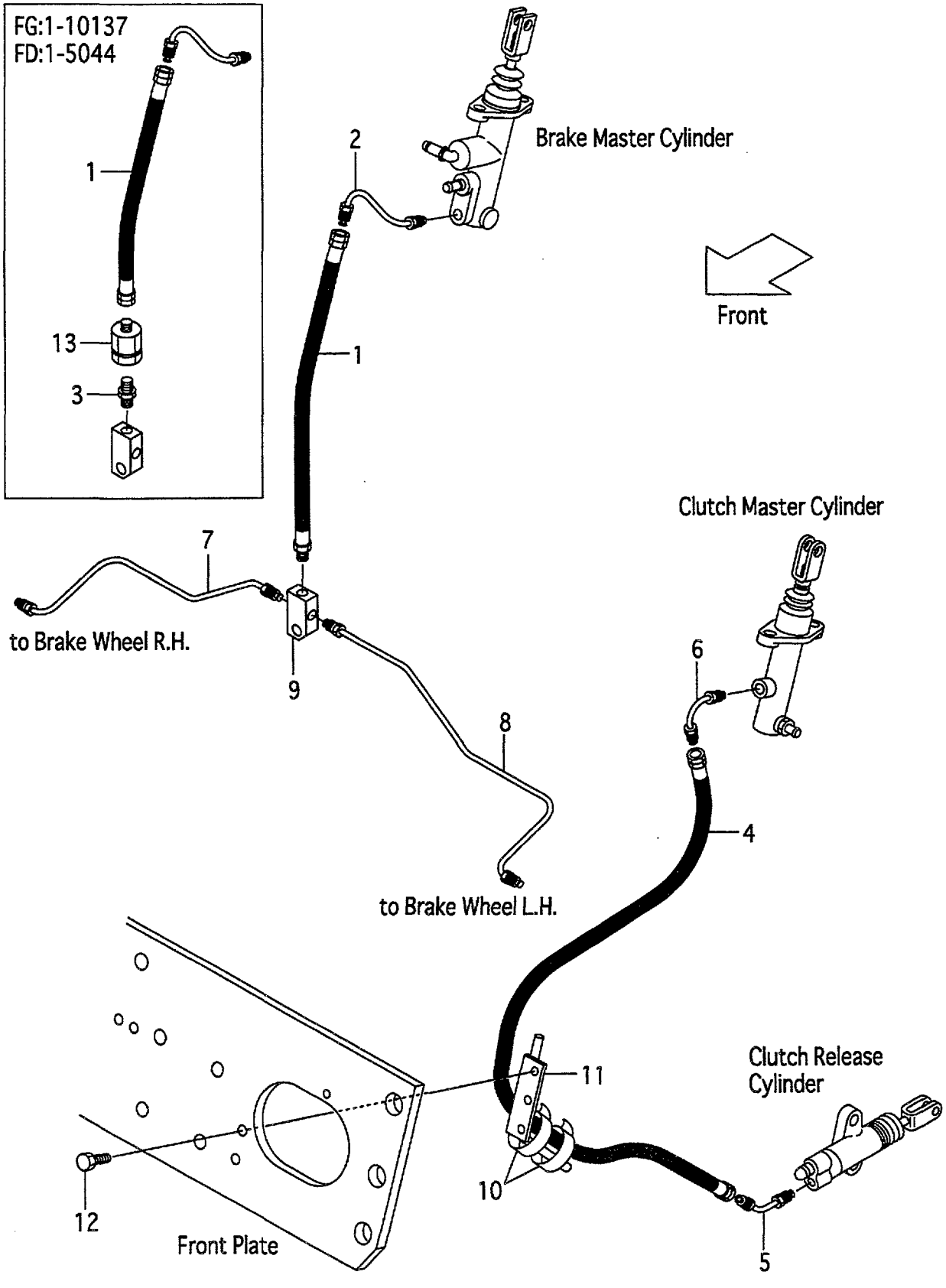

A:FG10C19 FG15C19 FG18C19
B:FD10C19 FD15C19 FD18C19

Item No	Part No.	Mark	Description		Req'd	Remarks : Serial No.
1	218G5-42011		HOSE,BRAKE	ﾎｰｽ	1	A:1-10137 B:1-5044
-	239A5-42071		HOSE,BRAKE	ﾎｰｽ	1	A:10138- B:5045-
2	218G5-42021		PIPE,BRAKE-MASTER	ﾊﾟｲﾌﾟ	1	
3	239A5-42441		ADAPTER	ｱﾀﾞﾌﾟﾀ	1	A:1-10137 B:1-5044
4	239A5-42451		HOSE,CLUTCH	ﾎｰｽ	1	
5	239A5-42461		PIPE,CLUTCH-RELEASE	ﾊﾟｲﾌﾟ	1	
6	239A5-42471		PIPE,CLUTCH-MASTER	ﾊﾟｲﾌﾟ	1	
7	218G5-42601		PIPE,BRAKE,RH	ﾊﾟｲﾌﾟ	1	
8	218G5-42621		PIPE,BRAKE,LH	ﾊﾟｲﾌﾟ	1	
9	23455-42021		THREE-WAY	ｽﾘｰｳｴｲ	1	
10	04913-11200		BAND	ﾊﾞﾝﾄﾞ	2	
11	239A5-42351		GUIDE,CABLE	ｶﾞｲﾄﾞ	1	(WITHOUT EXC,EXE, EXN,OBT,PSO)
12	216H3-92291		BOLT	ﾎﾞﾙﾄ	2	(WITHOUT EXC,EXE, EXN,OBT,PSO)
13	239B5-42701		VALVE,CHECK	ﾊﾞﾙﾌﾞ	1	A:1-10137 B:1-5044

FIG.116 BRAKE PIPE (T-TYPE)

(F5015460) ﾌﾞﾚｰｷﾊﾟｲﾌﾟ

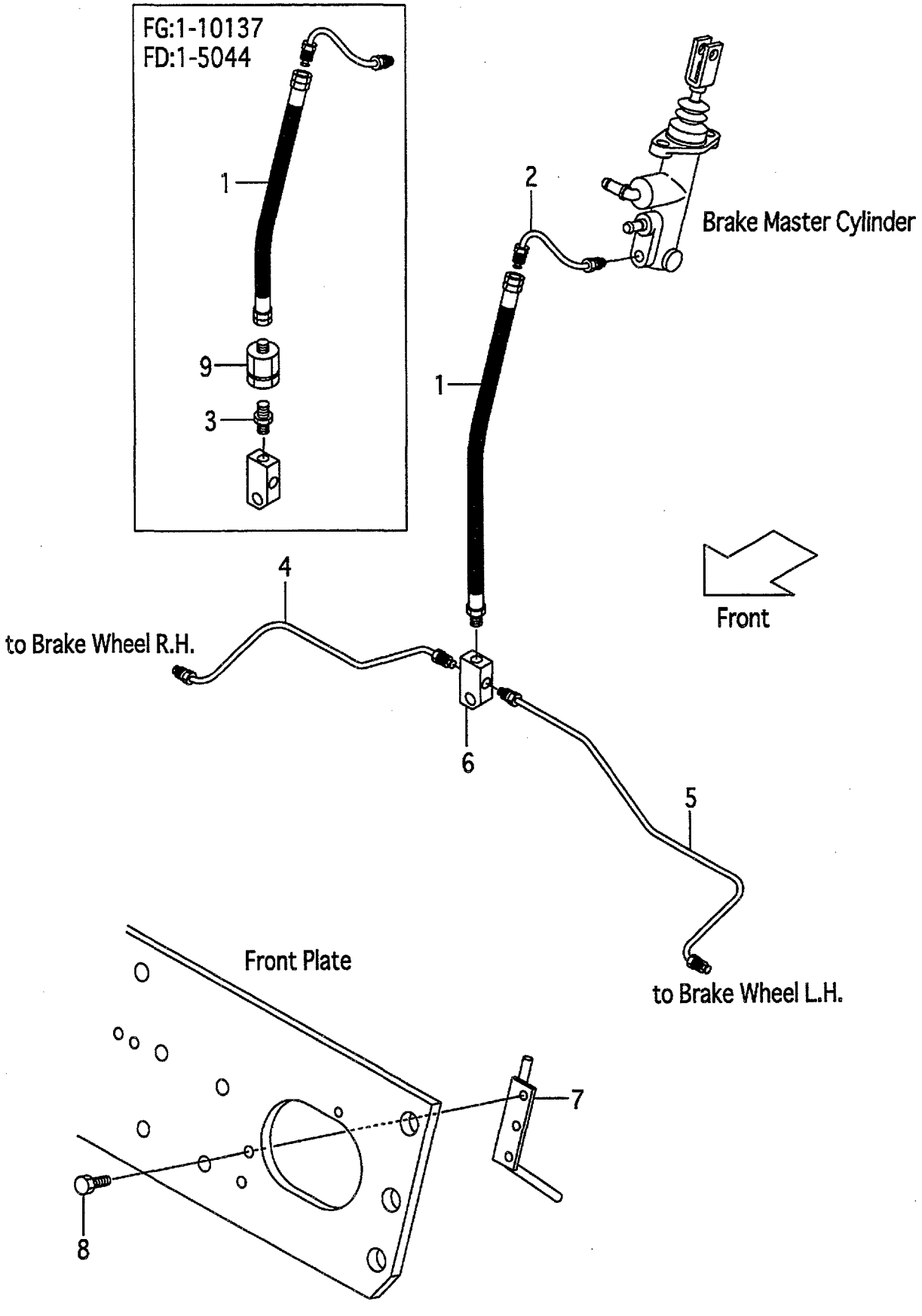

A:FG10T19 FG15T19 FG18T19
B:FD10T19 FD15T19 FD18T19

FIG.116
(F5015460)

Item No	Part No.	Mark	Description		Req'd	Remarks : Serial No.
1	218G5-42011		HOSE,BRAKE	ﾎｰｽ	1	A:1-10137 B:1-5044
-	239A5-42071		HOSE,BRAKE	ﾎｰｽ	1	A:10138- B:5045-
2	218G5-42021		PIPE,BRAKE-MASTER	ﾊﾟｲﾌﾟ	1	
3	239A5-42441		ADAPTER	ｱﾀﾞﾌﾟﾀ	1	A:1-10137 B:1-5044
4	218G5-42601		PIPE,BRAKE,RH	ﾊﾟｲﾌﾟ	1	
5	218G5-42621		PIPE,BRAKE,LH	ﾊﾟｲﾌﾟ	1	
6	23455-42021		THREE-WAY	ｽﾘｰｳｴｲ	1	
7	239A5-42351		GUIDE,CABLE	ｶﾞｲﾄﾞ	1	(WITHOUT EXC,EXE, EXN,OBT,PSO)
8	216H3-92291		BOLT	ﾎﾞﾙﾄ	2	(WITHOUT EXC,EXE, EXN,OBT,PSO)
9	239B5-42701		VALVE,CHECK	ﾊﾞﾙﾌﾞ	1	A:1-10137 B:1-5044

FIG.117 BRAKE PIPE (C-TYPE):[PC]

(F50154E0) ﾌﾞﾚｰｷﾊﾟｲﾌﾟ

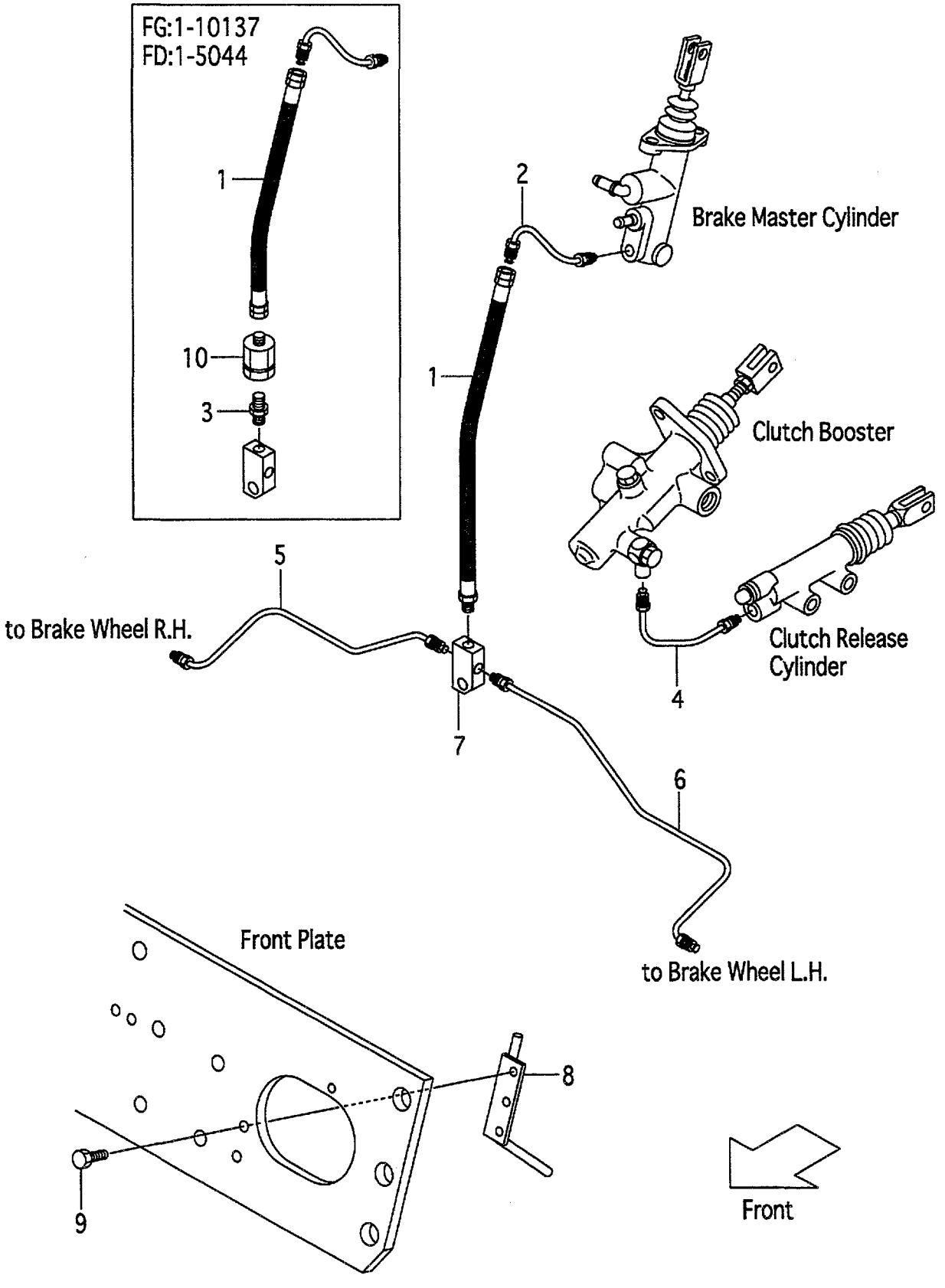

A:FG10C19 FG15C19 FG18C19
B:FD10C19 FD15C19 FD18C19

FIG.117
(F50154E0)

Item No	Part No.	Mark	Description		Req'd	Remarks : Serial No.
1	218G5-42011		HOSE,BRAKE	ﾎｰｽ	1	A:1-10137 B:1-5044 [PC]
-	239A5-42071		HOSE,BRAKE	ﾎｰｽ	1	A:10138- B:5045- [PC]
2	218G5-42021		PIPE,BRAKE-MASTER	ﾊﾟｲﾌﾟ	1	[PC]
3	239A5-42441		ADAPTER	ｱﾀﾞﾌﾟﾀ	1	A:1-10137 B:1-5044 [PC]
4	219S5-42271		PIPE,RELEASE-CYL	ﾊﾟｲﾌﾟ	1	[PC]
5	218G5-42601		PIPE,BRAKE,RH	ﾊﾟｲﾌﾟ	1	[PC]
6	218G5-42621		PIPE,BRAKE,LH	ﾊﾟｲﾌﾟ	1	[PC]
7	23455-42021		THREE-WAY	ｽﾘｰｳｴｲ	1	[PC]
8	239A5-42351		GUIDE,CABLE	ｶﾞｲﾄﾞ	1	[PC]
9	216H3-92291		BOLT	ﾎﾞﾙﾄ	2	[PC]
10	239B5-42701		VALVE,CHECK	ﾊﾞﾙﾌﾞ	1	A:1-10137 B:1-5044 [PC]

FIG.118 FOOT PEDAL COVER

(F5015470) ﾌｯﾄﾍﾟﾀﾞﾙｶﾊﾞｰ

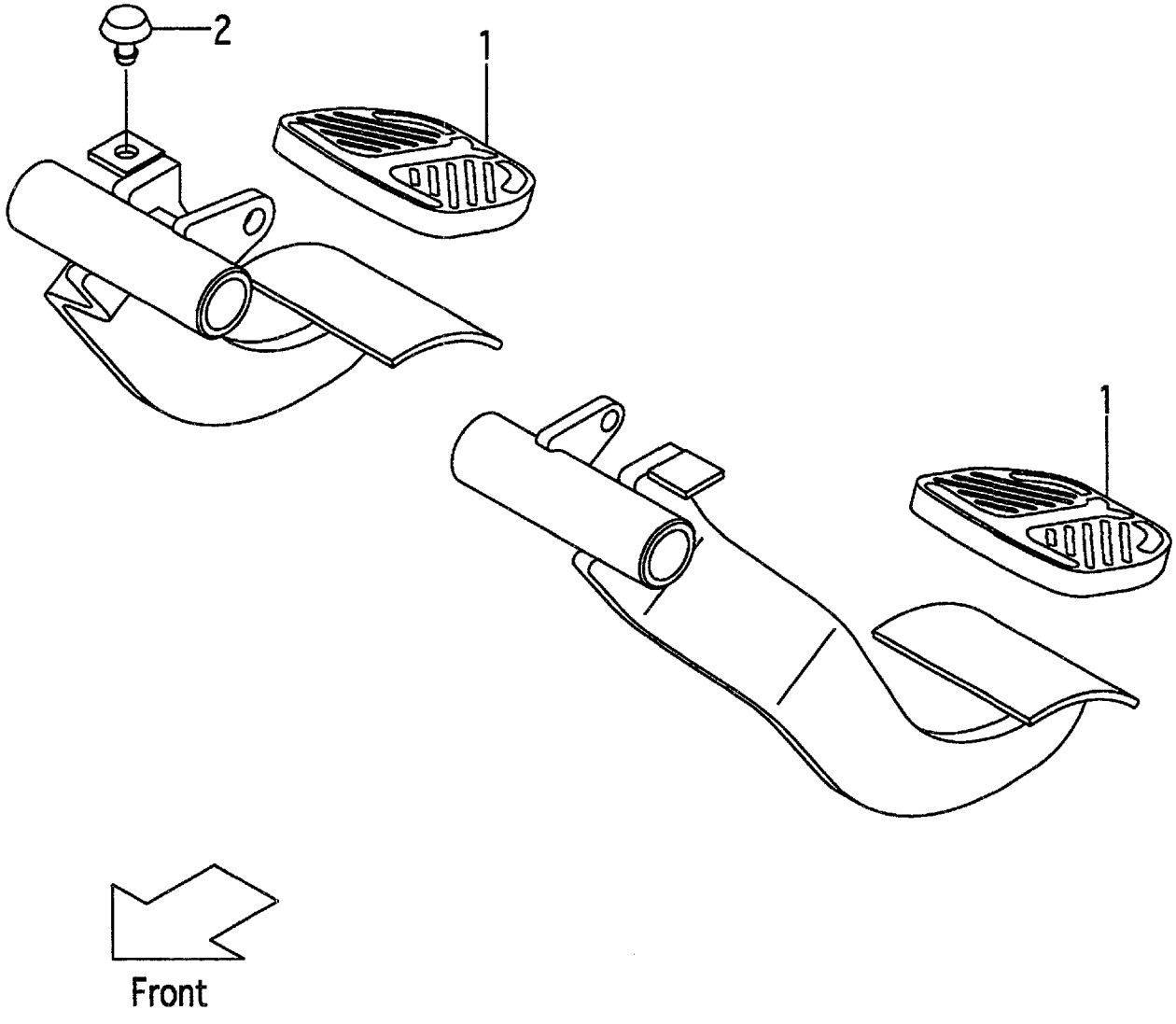

FIG.118
(F5015470)

A:FG10C19 FG15C19 FG18C19 C:FD10C19 FD15C19 FD18C19
B:FG10T19 FG15T19 FG18T19 D:FD10T19 FD15T19 FD18T19

Item No	Part No.	Mark	Description	Req'd	Remarks : Serial No.
1	239A5-42301		COVER,HEAD カバー	2	
2	23235-40091		RUBBER ラバー	1	

FIG.119 BRAKE MASTER CYLINDER

(F5015480) ﾌﾞﾚｰｷﾏｽﾀｼﾘﾝﾀﾞ

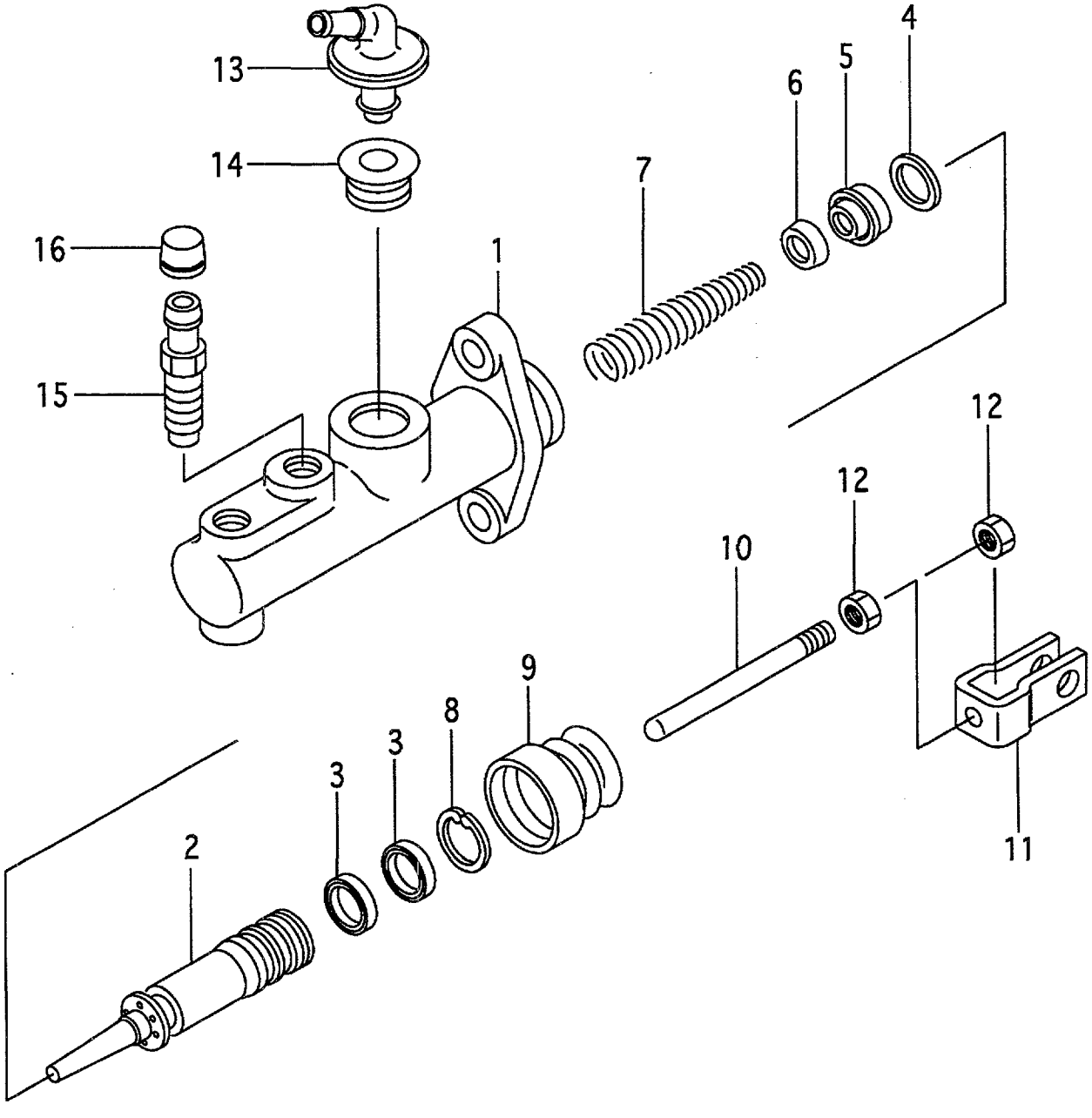

A:FG10C19 FG15C19 FG18C19:1-10137 C:FD10C19 FD15C19 FD18C19:1-5044
B:FG10T19 FG15T19 FG18T19:1-10137 D:FD10T19 FD15T19 FD18T19:1-5044

Item No	Part No.	Mark	Description		Req'd	Remarks : Serial No.
A1	239A5-40101		CYL,BRAKE-MASTER	ｼﾘﾝﾀﾞｱｯｾﾝ	1	INC.1-16
1	NO PART NO.	#	BODY,CYL	ﾎﾞﾃﾞｨ	1	
A2	239A5-40611	*	PISTON-ASSY	ﾋﾟｽﾄﾝｱｯｾﾝ	1	INC.2-7
2	239A5-42171	*	PISTON	ﾋﾟｽﾄﾝ	1	
3	239A5-42121	*	CAP,SECONDARY	ｷｬｯﾌﾟ	2	
4	239A5-42101	*	SPACER	ｽﾍﾟｰｻ	1	
5	239A5-42181	*	CAP,PRIMARY	ｷｬｯﾌﾟ	1	
6	239A5-42191	*	THIMBLE	ｼﾝﾌﾞﾙ	1	
7	239A5-42261	*	SPRING	ｽﾌﾟﾘﾝｸﾞ	1	
8	25595-42311	*	RING,SNAP	ｽﾅｯﾌﾟﾘﾝｸﾞ	1	
9	239A5-42221	*	BOOT	ﾌﾞｰﾂ	1	
10	239A5-42271		ROD,PUSH	ﾛｯﾄﾞ	1	
11	239A5-42281		YOKE	ﾖｰｸ	1	
12	239A5-42291		NUT	ﾅｯﾄ	2	
13	25595-42411		UNION,FILLER	ﾕﾆｵﾝ	1	
14	25595-42421		BUSHING	ﾌﾞｯｼﾝｸﾞ	1	
15	239A5-42311		VALVE,BLEEDER	ﾊﾞﾙﾌﾞ	1	
16	239A5-42321	*	CAP,BLEEDER	ｷｬｯﾌﾟ	1	
K1	239A5-40631		KIT,REPAIR	ﾘﾍﾟｱｷｯﾄ	1	INC.2-9,16

FIG.119A BRAKE MASTER CYLINDER

(F5015481) ﾌﾞﾚｰｷﾏｽﾀｼﾘﾝﾀﾞ

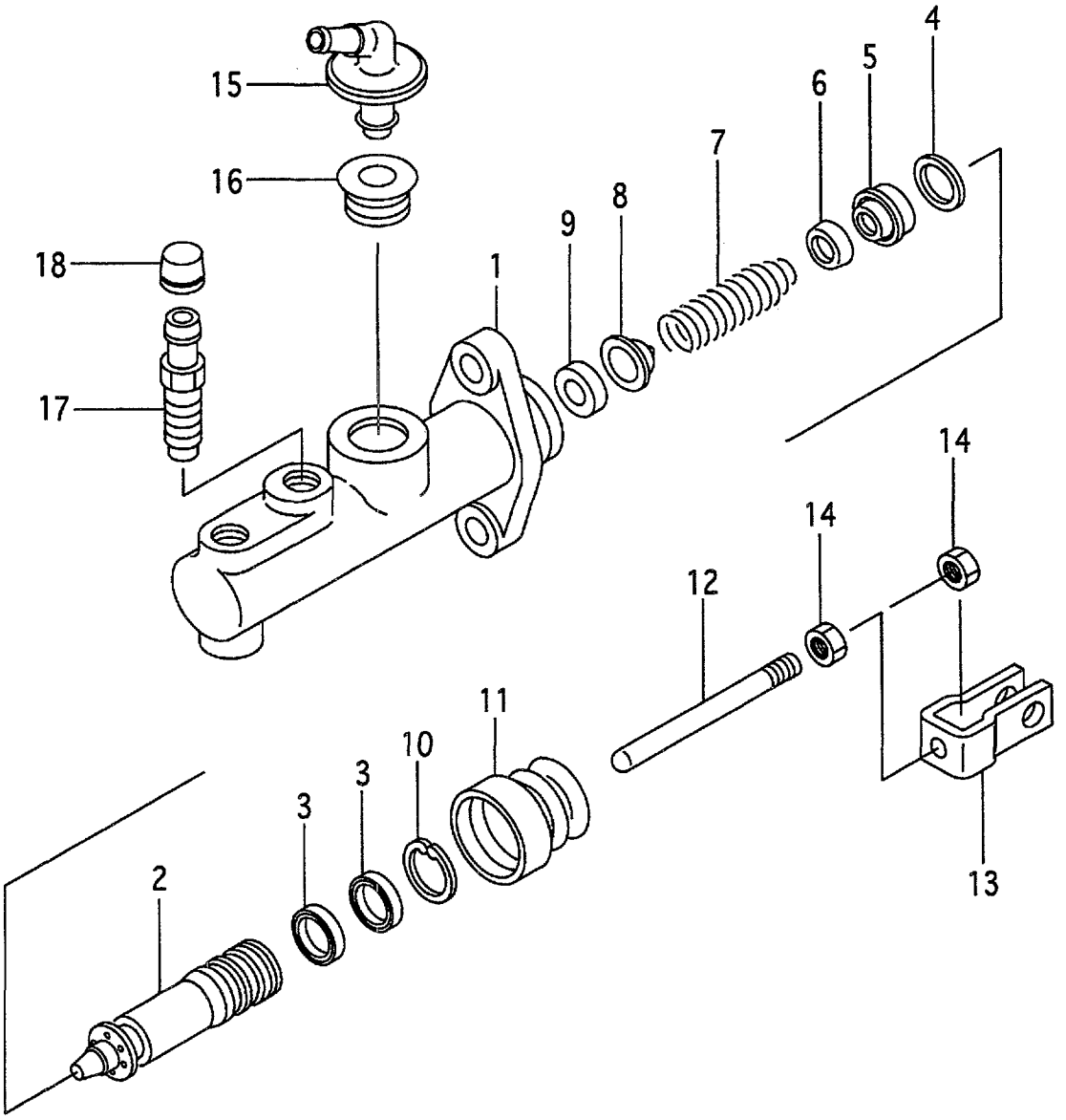

A:FG10C19 FG15C19 FG18C19:10138- C:FD10C19 FD15C19 FD18C19:5045-
B:FG10T19 FG15T19 FG18T19:10138- D:FD10T19 FD15T19 FD18T19:5045-

Item No	Part No.	Mark	Description		Req'd	Remarks : Serial No.
A1	239A5-40102		CYL,BRAKE-MASTER	ｼﾘﾝﾀﾞｱｯｾﾝ	1	INC.1-18
1	NO PART NO.	#	BODY,CYL	ﾎﾞﾃﾞｨ	1	
A2	239A5-40601	*	PISTON-ASSY	ﾋﾟｽﾄﾝｱｯｾﾝ	1	INC.2-7
2	239A5-42161	*	PISTON	ﾋﾟｽﾄﾝ	1	
3	239A5-42121	*	CAP,SECONDARY	ｷｬｯﾌﾟ	2	
4	239A5-42101	*	SPACER	ｽﾍﾟｰｻ	1	
5	239A5-42181	*	CAP,PRIMARY	ｷｬｯﾌﾟ	1	
6	239A5-42191	*	THIMBLE	ｼﾝﾌﾞﾙ	1	
7	239A5-42251	*	SPRING	ｽﾌﾟﾘﾝｸﾞ	1	
8	25595-42381		VALVE	ﾊﾞﾙﾌﾞ	1	
9	25595-42391		SEAT,VALVE	ｼｰﾄ	1	
10	25595-42311	*	RING,SNAP	ｽﾅｯﾌﾟﾘﾝｸﾞ	1	
11	239A5-42221	*	BOOT	ﾌﾞｰﾂ	1	
12	239A5-42271		ROD,PUSH	ﾛｯﾄﾞ	1	
13	239A5-42281		YOKE	ﾖｰｸ	1	
14	239A5-42291		NUT	ﾅｯﾄ	2	
15	25595-42411		UNION,FILLER	ﾕﾆｵﾝ	1	
16	25595-42421		BUSHING	ﾌﾞｯｼﾝｸﾞ	1	
17	239A5-42311		VALVE,BLEEDER	ﾊﾞﾙﾌﾞ	1	
18	239A5-42321	*	CAP,BLEEDER	ｷｬｯﾌﾟ	1	
K1	239A5-40641		KIT,REPAIR	ﾘﾍﾟｱｷｯﾄ	1	INC.2-7,10,11,18

FIG.120 BRAKE LEVER

(F5015510) ﾌﾞﾚｰｷﾚﾊﾞｰ

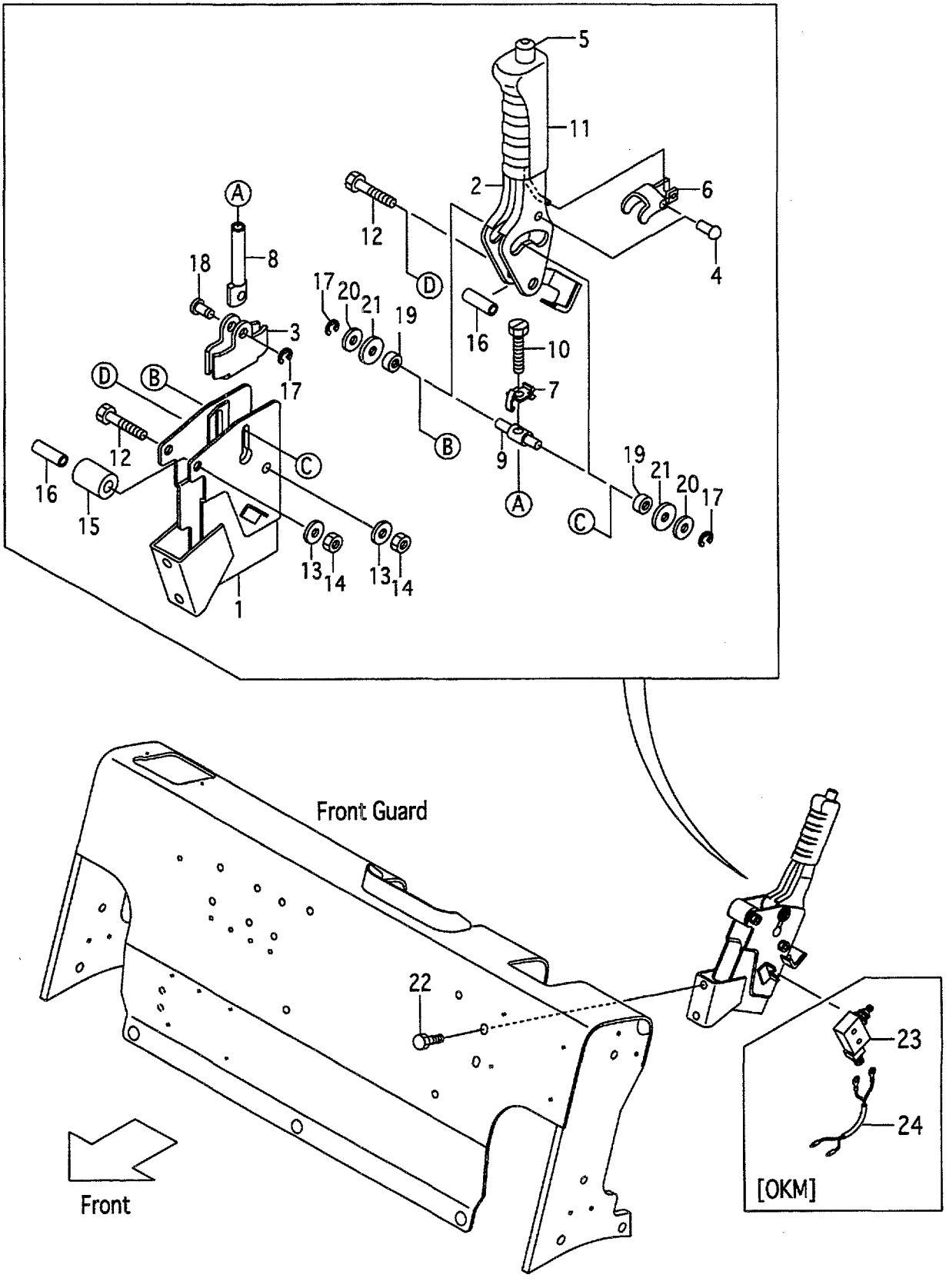

A:FG10C19 FG10T19 FG15C19 FG15T19 FG18C19 FG18T19
B:FD10C19 FD10T19 FD15C19 FD15T19 FD18C19 FD18T19

Item No	Part No.	Mark	Description		Req'd	Remarks : Serial No.
A1	239A5-50101		LEVER-ASSY,BRAKE	ﾌﾞﾚｰｷﾚﾊﾞｰｱｯｾﾝ	1	INC.1-21
1	NO PART NO.		BRACKET,BRAKE-LEVER	ﾌﾞﾗｹｯﾄ	1	
2	NO PART NO.		LEVER	ﾚﾊﾞｰ	1	
3	27415-52151		BRACKET	ﾌﾞﾗｹｯﾄ	1	
4	230C5-55021		PIN	ﾋﾟﾝ	1	
5	230C5-55031		ROD,RELEASE	ﾛｯﾄﾞ	1	
6	230C5-55041		PLATE,LOCK	ﾌﾟﾚｰﾄ	1	
7	230C5-55051		PLATE,TENSION	ﾌﾟﾚｰﾄ	1	
8	230C5-55061		ROD,ADJUST	ﾛｯﾄﾞ	1	
9	230C5-55071		PIN,TRUNION	ﾋﾟﾝ	1	
10	230C5-55081		BOLT	ﾎﾞﾙﾄ	1	
11	NO PART NO.		GRIP	ｸﾞﾘｯﾌﾟ	1	
12	01100-08050		BOLT	ﾎﾞﾙﾄ	2	
13	02010-00008		WASHER	ﾜｯｼｬ	2	
14	01400-00008		NUT	ﾅｯﾄ	2	
15	222A5-52111		RUBBER,STOPPER	ﾗﾊﾞｰ	1	
16	230C5-55101		COLLAR	ｶﾗｰ	2	
17	214A5-52131		E-RING	Eﾘﾝｸﾞ	3	
18	230C5-55111		PIN	ﾋﾟﾝ	1	
19	230C5-55121		ROLLER,CAM	ﾛｰﾗ	2	
20	214A5-52121		WASHER	ﾜｯｼｬ	2	
21	214A5-52241		WASHER	ﾜｯｼｬ	2	
22	216G6-43231		BOLT	ﾎﾞﾙﾄ	2	
23	27912-62441		SWITCH,MICRO	ｽｲｯﾁ	1	[OKM]
24	535H3-82261		WIRE-HARNESS,SWITCH	ﾜｲﾔﾊｰﾈｽ	1	[OKM]

FIG.121 FRAME

(F5016110) フレーム

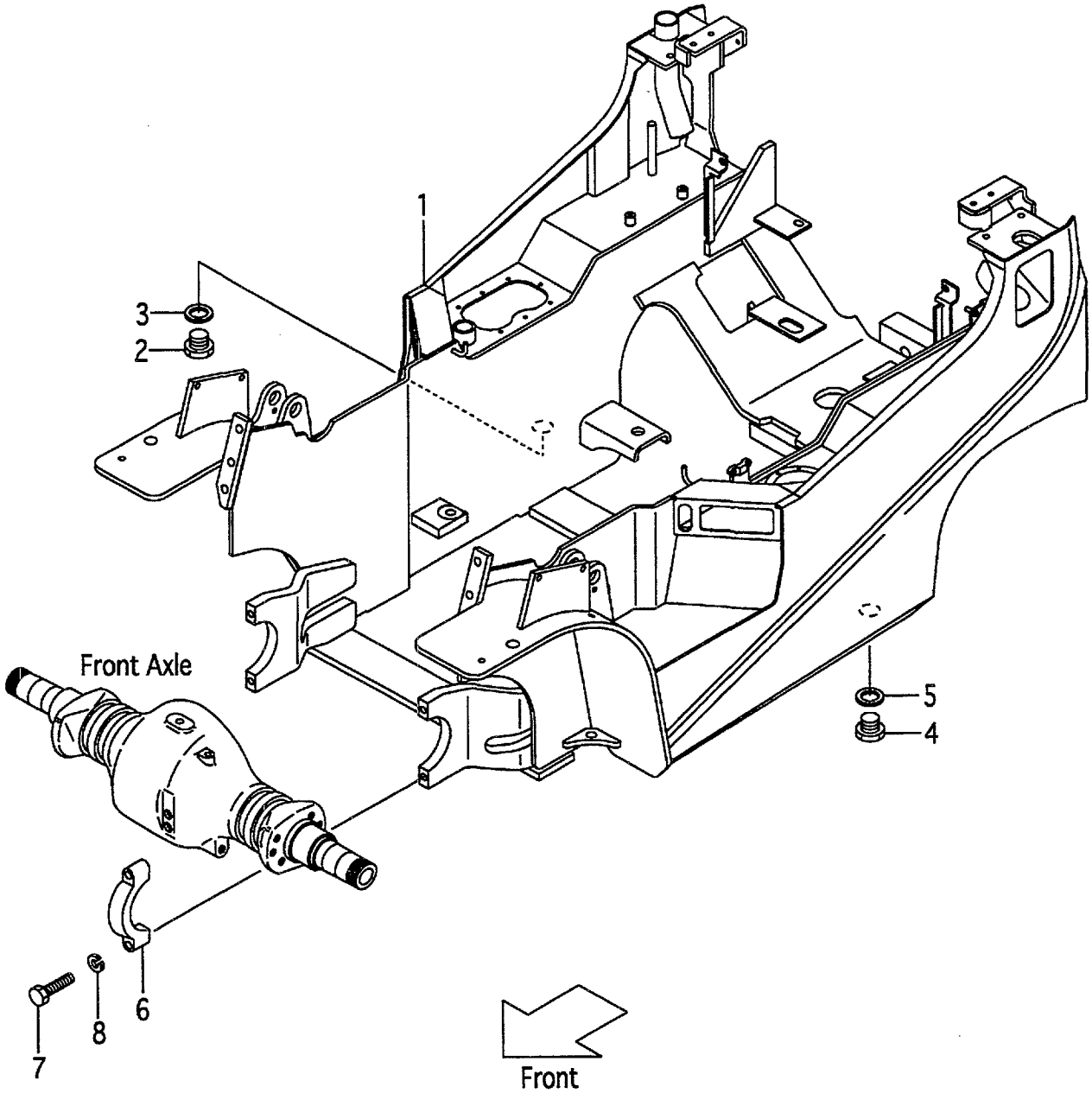

A:FG10C19 D:FG15T19 G:FD10C19 J:FD15T19
B:FG10T19 E:FG18C19 H:FD10T19 K:FD18C19
C:FG15C19 F:FG18T19 I:FD15C19 L:FD18T19

FIG.121
(F5016110)

Item No	Part No.	Mark	Description		Req'd	Remarks : Serial No.
1	NO PART NO.	#	FRAME	フレーム	1	
2	21237-52051		PLUG,DRAIN	ﾌﾟﾗｸﾞ	1	
3	21237-52062		PACKING	ﾊﾟｯｷﾝｸﾞ	1	
4	21237-52051		PLUG,DRAIN	ﾌﾟﾗｸﾞ	1	
5	21237-52062		PACKING	ﾊﾟｯｷﾝｸﾞ	1	
6	210F6-12441		CAP,SUPPORT,F-AXLE	ｷｬｯﾌﾟ	2	
7	01100-14070		BOLT	ﾎﾞﾙﾄ	4	
8	02010-00014		WASHER	ﾜｯｼｬ	4	

FIG.122 OIL TANK
(F5016120) オイルタンク

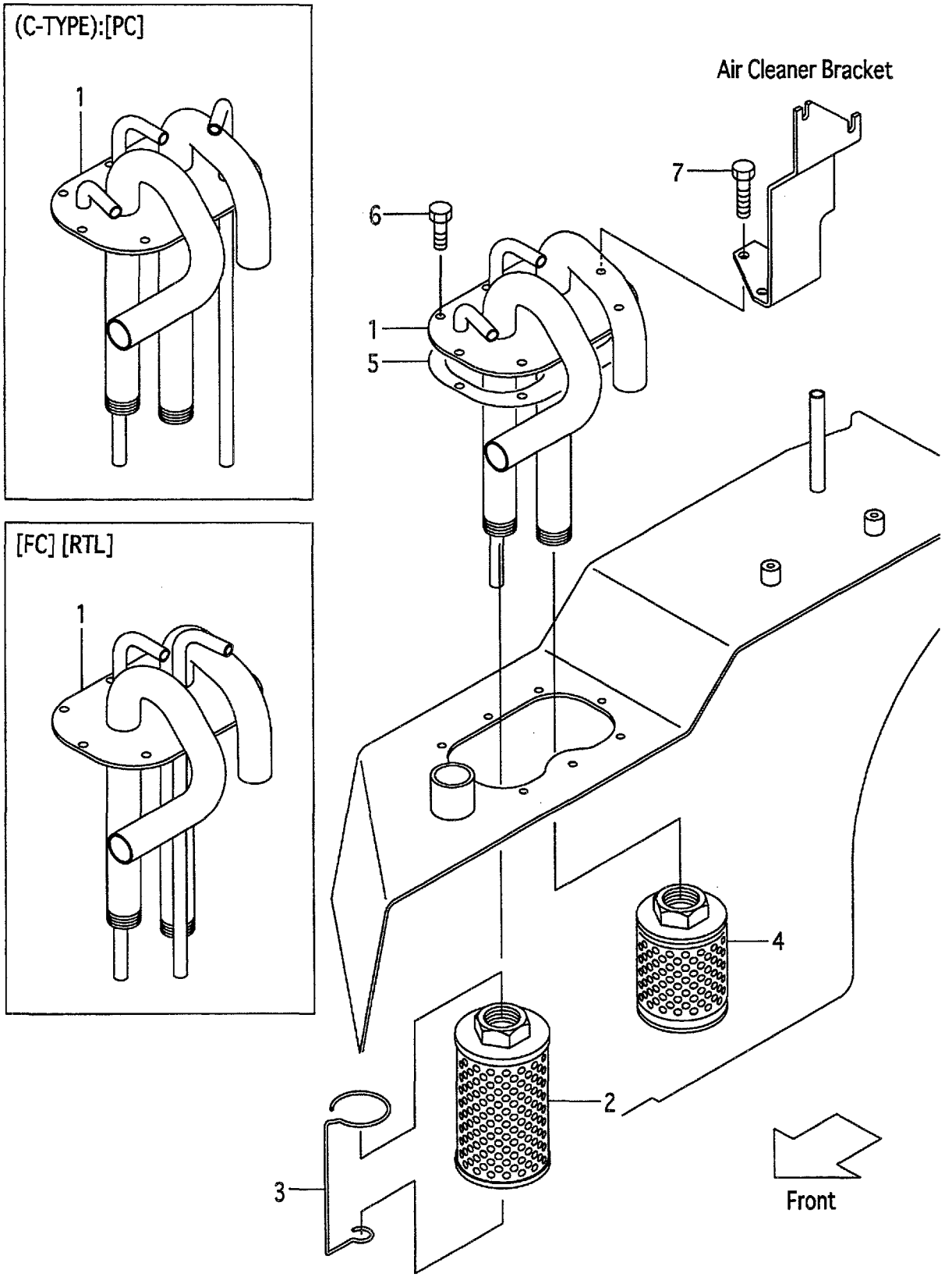

A:FG10C19 FG15C19 FG18C19 C:FD10C19 FD15C19 FD18C19
B:FG10T19 FG15T19 FG18T19 D:FD10T19 FD15T19 FD18T19

Item No	Part No.	Mark	Description		Req'd	Remarks : Serial No.
1	239A7-52001		PIPE,SUCTION	ﾊﾟｲﾌﾟ	1	
-	239H7-52001		PIPE,SUCTION	ﾊﾟｲﾌﾟ	1	A,C [PC]
-	539G3-72001		PIPE,SUCTION	ﾊﾟｲﾌﾟ	1	[FC][RTL]
A1	271A7-52301		FILTER-ASSY,RETURN	ﾌｨﾙﾀｱｯｾﾝ	1	INC.2,3
2	214A7-52081		FILTER,RETURN	ﾌｨﾙﾀ	1	
3	NO PART NO.	#	WIRE	ﾜｲﾔ	1	
4	216G7-52051		FILTER,SUCTION	ﾌｨﾙﾀ	1	
5	216G2-22202		PACKING	ﾊﾟｯｷﾝｸﾞ	1	
6	229F2-22151		BOLT	ﾎﾞﾙﾄ	6	
7	229F2-22161		BOLT	ﾎﾞﾙﾄ	2	

FIG.123 OIL CAP & LEVEL
(F5016130) オイルキャップ&レベル

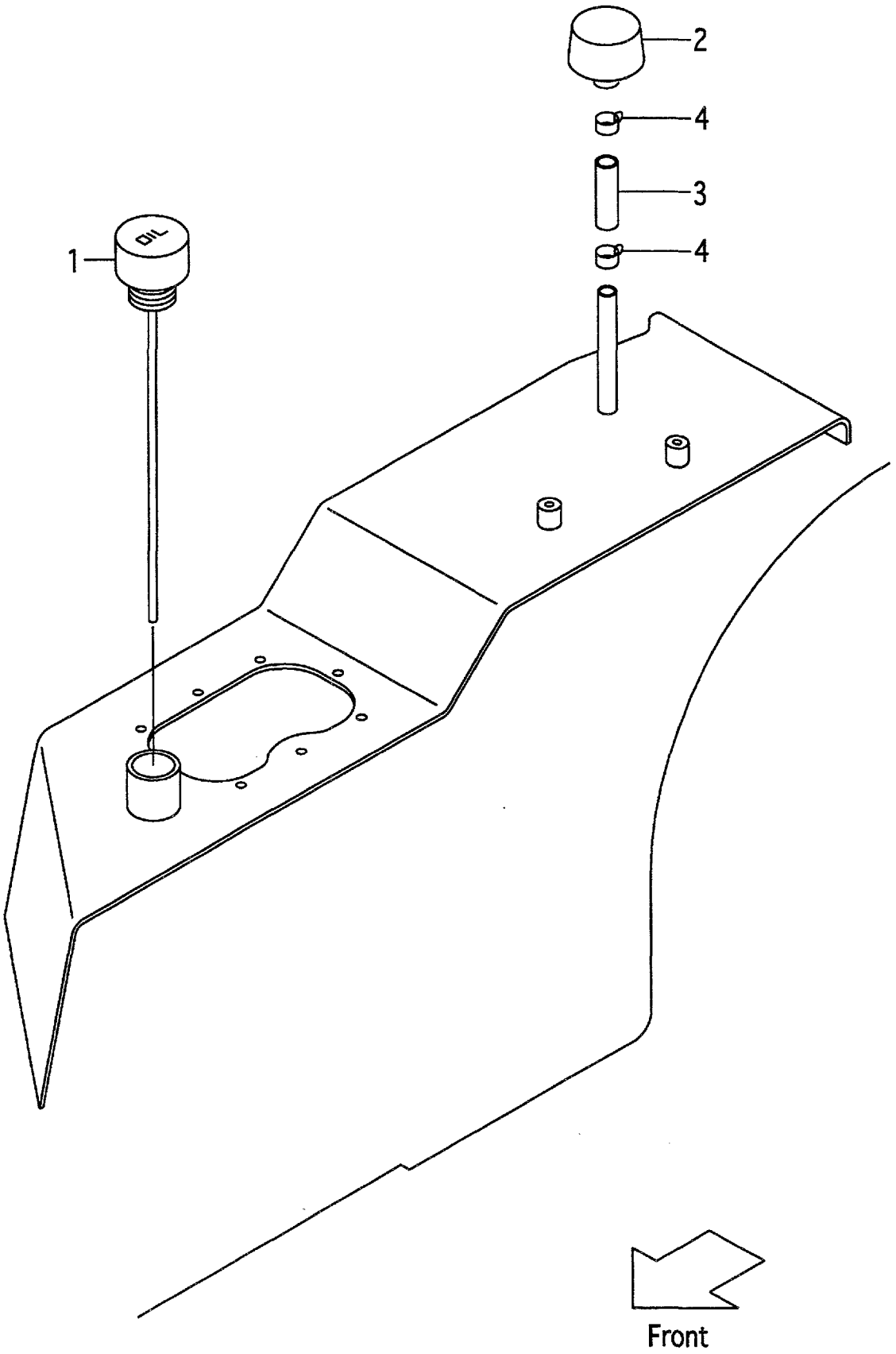

A:FG10C19 FG10T19 FG15C19 FG15T19 FG18C19 FG18T19
B:FD10C19 FD10T19 FD15C19 FD15T19 FD18C19 FD18T19

Item No	Part No.	Mark	Description		Req'd	Remarks : Serial No.
1	216G7-52101		CAP,OIL	ｷｬｯﾌﾟ	1	
2	216G7-52201		CAP,BREATHER	ｷｬｯﾌﾟ	1	
3	04710-04005		HOSE	ﾎｰｽ	1	
4	04914-00019		CLIP	ｸﾘｯﾌﾟ	2	

FIG.124 FUEL TANK (G-TYPE)

(F5016140) フューエルタンク

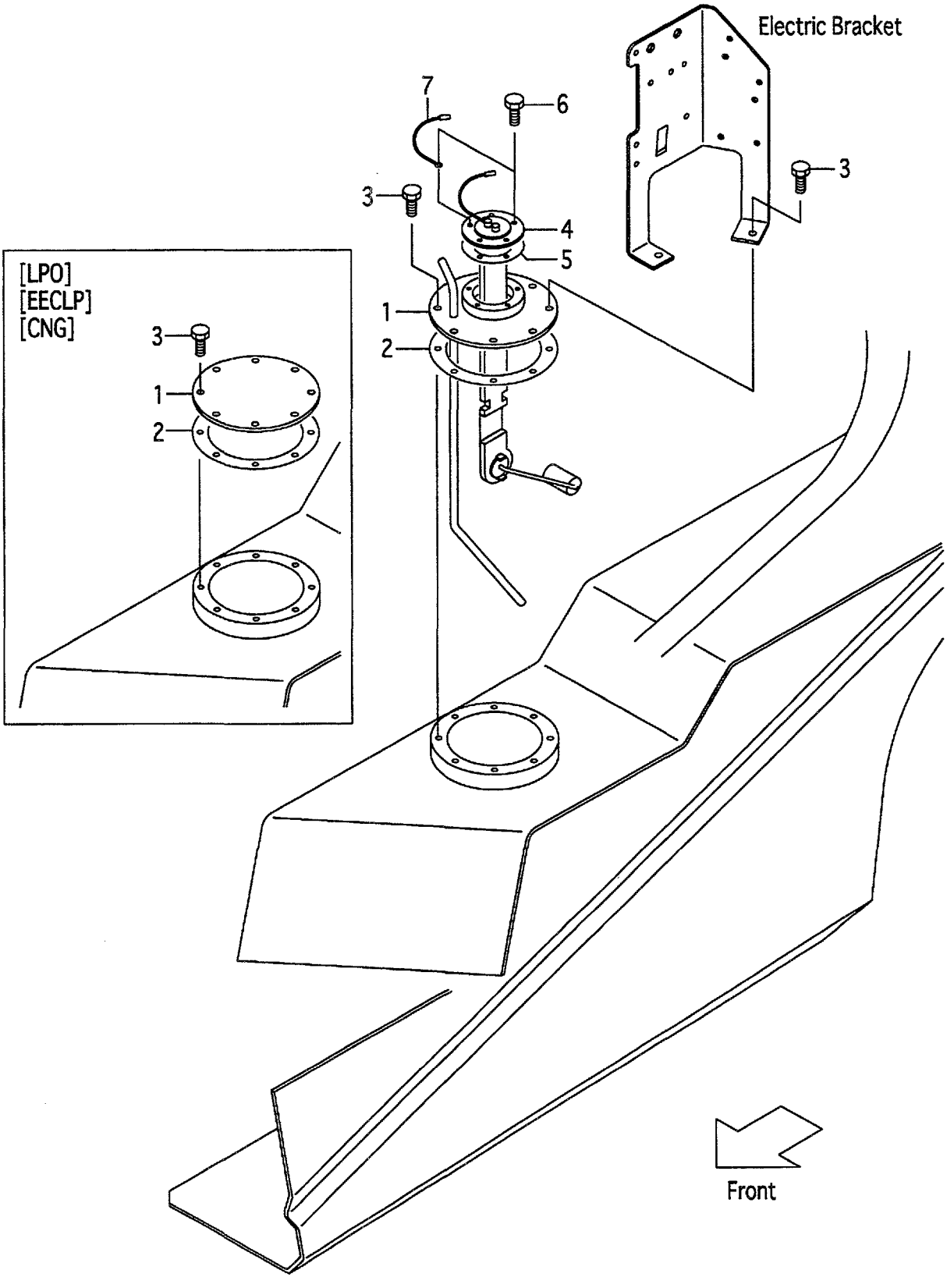

A:FG10C19 FG10T19 FG15C19 FG15T19 FG18C19 FG18T19

Item No	Part No.	Mark	Description		Req'd	Remarks : Serial No.
1	237A2-22101		PLATE,FUEL-TOP	ﾌﾟﾚｰﾄ	1	
-	537A0-52001		PLATE,FUEL-TOP	ﾌﾟﾚｰﾄ	1	[LPO][EECLP][CNG]
2	272E7-52022		GASKET	ｶﾞｽｹｯﾄ	1	
3	01183-06016		BOLT	ﾎﾞﾙﾄ	8	
4	222A2-22061		GAUGE,FUEL	ｹﾞｰｼﾞ	1	(WITHOUT LPO,EECLP,CNG)
-	222A2-22071		GAUGE,FUEL	ｹﾞｰｼﾞ	1	[OKM]
5	229F2-22071		GASKET	ｶﾞｽｹｯﾄ	1	(WITHOUT LPO,EECLP,CNG)
6	01183-05010		BOLT	ﾎﾞﾙﾄ	5	(WITHOUT LPO,EECLP,CNG)
7	25592-42121		WIRE	ﾜｲﾔ	1	(WITHOUT LPO,EECLP,CNG)

FIG.125 FUEL TANK (D-TYPE)

(F5016150) フューエルタンク

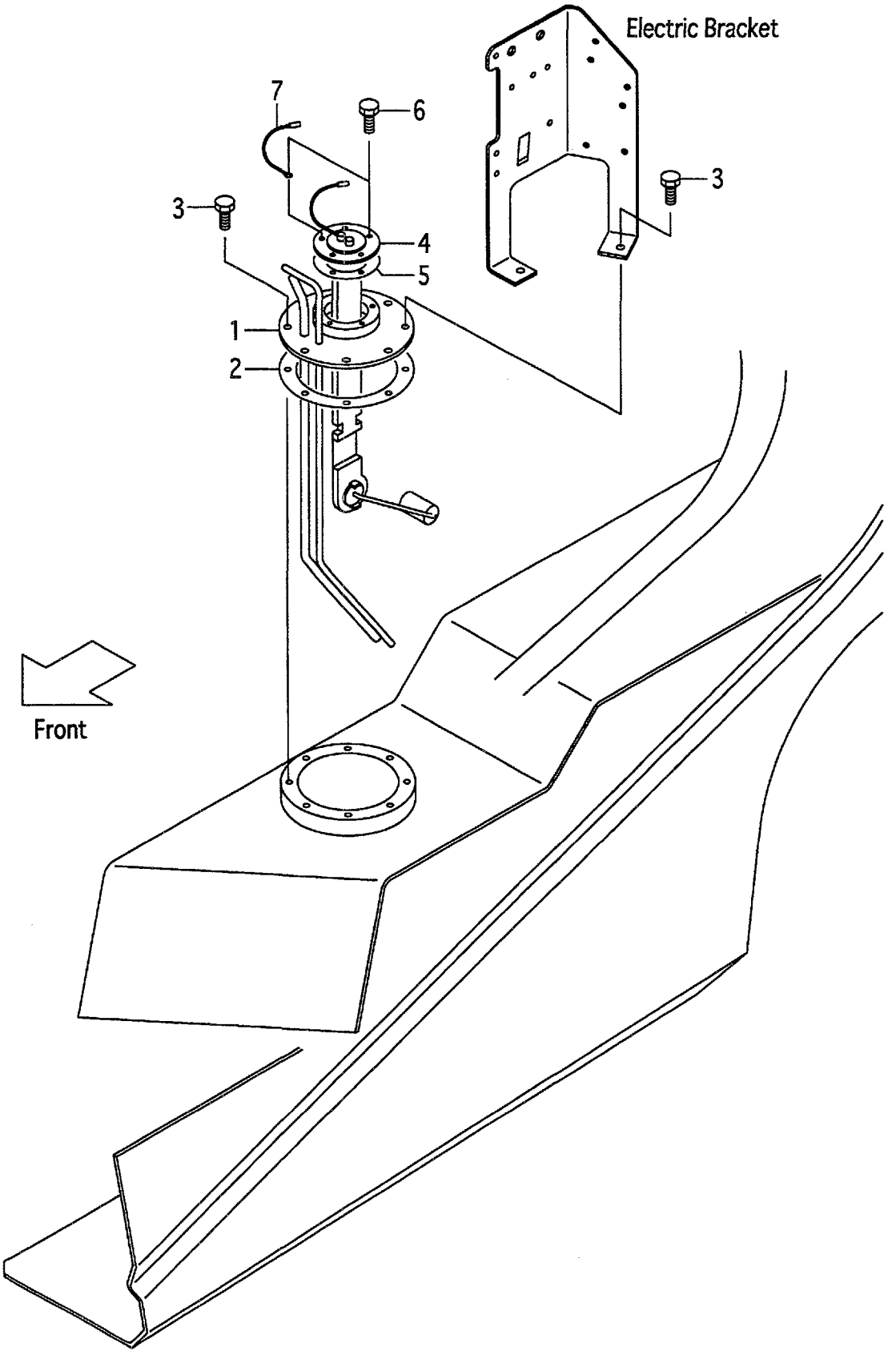

A:FD10C19 FD10T19 FD15C19 FD15T19 FD18C19 FD18T19

Item No	Part No.	Mark	Description		Req'd	Remarks : Serial No.
1	239A2-22101		PLATE,FUEL-TOP	ﾌﾟﾚｰﾄ	1	
2	272E7-52022		GASKET	ｶﾞｽｹｯﾄ	1	
3	01183-06016		BOLT	ﾎﾞﾙﾄ	8	
4	222A2-22061		GAUGE,FUEL	ｹﾞｰｼﾞ	1	
-	222A2-22071		GAUGE,FUEL	ｹﾞｰｼﾞ	1	[OKM]
5	229F2-22071		GASKET	ｶﾞｽｹｯﾄ	1	
6	01183-05010		BOLT	ﾎﾞﾙﾄ	5	
7	25592-42121		WIRE	ﾜｲﾔ	1	

FIG.126 BALANCE WEIGHT

(F5016310) ﾊﾞﾗﾝｽｳｴｲﾄ

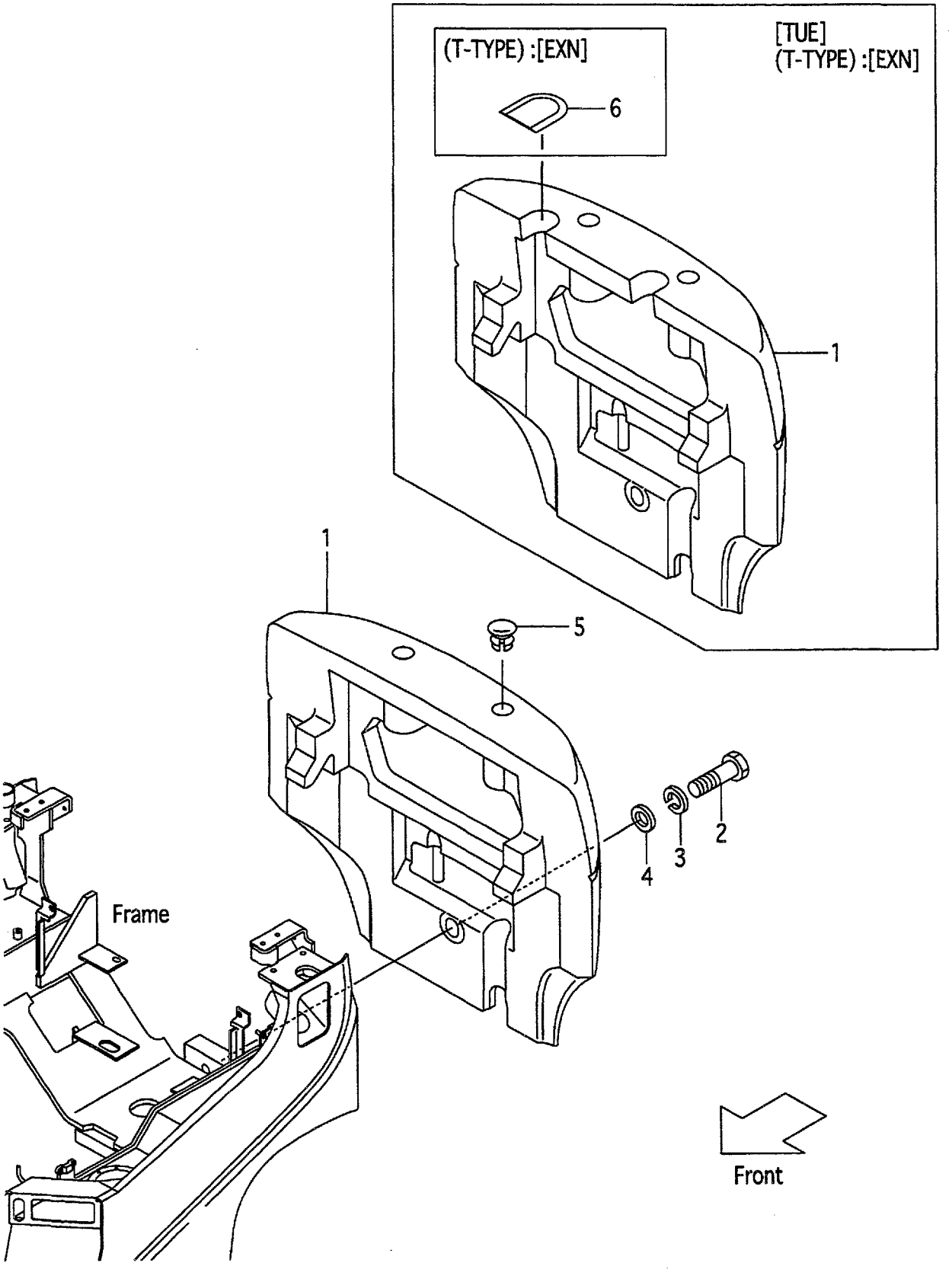

A:FG10C19 D:FG15T19 G:FD10C19 J:FD15T19
B:FG10T19 E:FG18C19 H:FD10T19 K:FD18C19
C:FG15C19 F:FG18T19 I:FD15C19 L:FD18T19

FIG.126
(F5016310)

Item No	Part No.	Mark	Description		Req'd	Remarks : Serial No.
1	NO PART NO.	#	WEIGHT,BALANCE	ｳｴｲﾄ	1	
2	01110-30090		BOLT	ﾎﾞﾙﾄ	1	A,B,G,H
-	01110-30150		BOLT	ﾎﾞﾙﾄ	1	C,D,E,F,I,J,K,L
3	02010-00030		WASHER	ﾜｯｼｬ	1	
4	22216-30051		WASHER	ﾜｯｼｬ	1	
5	216G6-32101		CAP	ｷｬｯﾌﾟ	2	(WITHOUT LPG,LPO,EECLP)
-	216G6-32101		CAP	ｷｬｯﾌﾟ	2	A,B,C,D,E,F [LPG/EX][LPO/EX][EECLP/EX]
6	516G2-72051		COVER	ｶﾊﾞｰ	1	B,D,F,H,J,L [EXN]

FIG.127 BALANCE WEIGHT [HC]

(F5016320) ﾊﾞﾗﾝｽｳｴｲﾄ

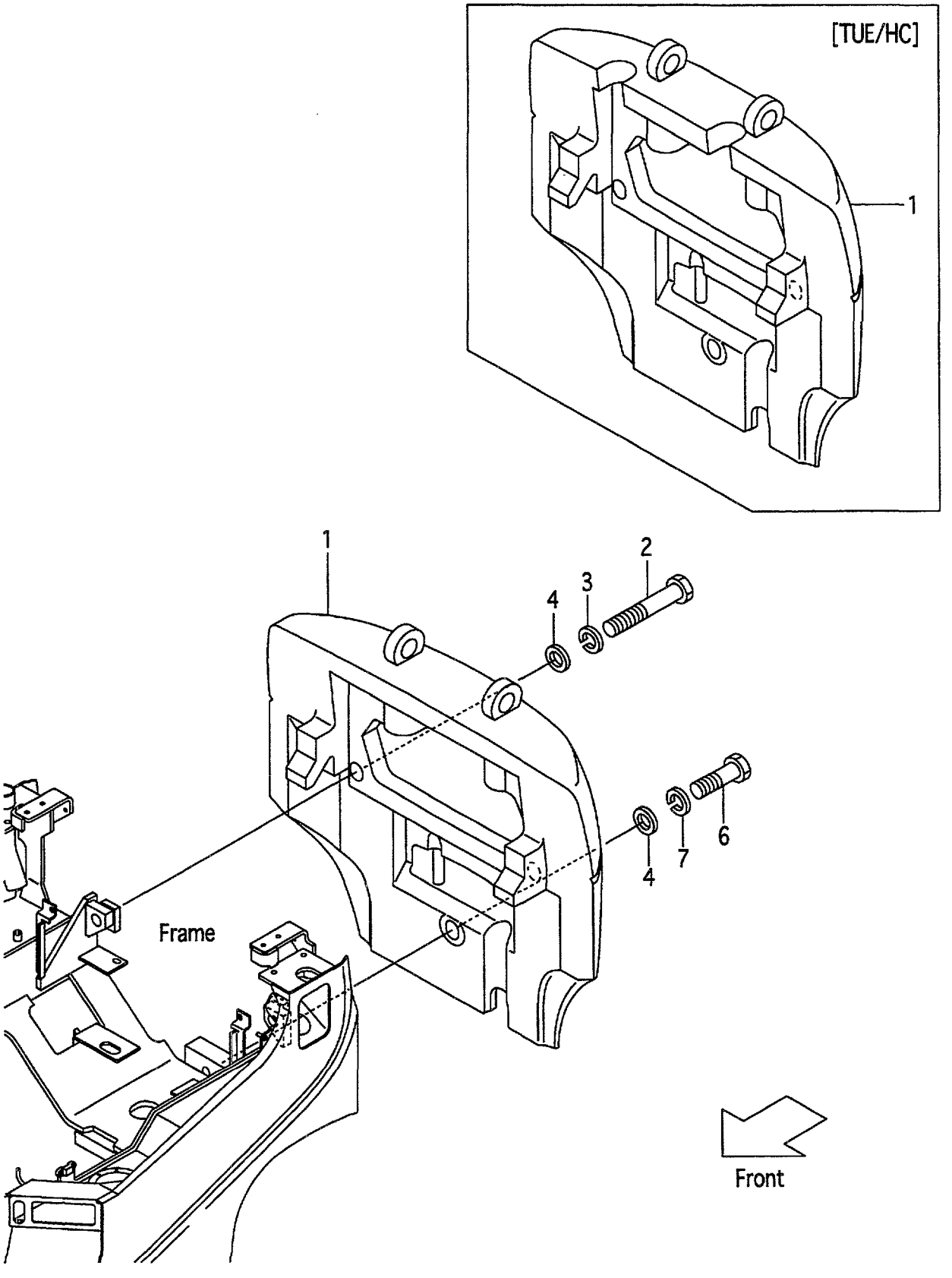

A:FG10C19 FG10T19 D:FD10C19 FD10T19
B:FG15C19 FG15T19 E:FD15C19 FD15T19
C:FG18C19 FG18T19 F:FD18C19 FD18T19

FIG.127
(F5016320)

Item No	Part No.	Mark	Description		Req'd	Remarks : Serial No.
1	NO PART NO.	#	WEIGHT,BALANCE	ｳｴｲﾄ	1	[HC][TUE/HC]
2	01113-30160		BOLT	ﾎﾞﾙﾄ	2	A,D [HC][TUE/HC]
-	01113-30190		BOLT	ﾎﾞﾙﾄ	2	B,E [HC][TUE/HC]
-	01113-30230		BOLT	ﾎﾞﾙﾄ	2	C,F [HC][TUE/HC]
3	225R6-32001		WASHER	ﾜｯｼｬ	2	[HC][TUE/HC]
4	02010-00030		WASHER	ﾜｯｼｬ	3	[HC][TUE/HC]
5	225R9-12101	+	DECAL,HOOK-CAUTION	ﾃﾞｶﾙ	1	[HC][TUE/HC]
6	01110-30090		BOLT	ﾎﾞﾙﾄ	1	A,D [HC][TUE/HC]
-	01110-30150		BOLT	ﾎﾞﾙﾄ	1	B,C,E,F [HC][TUE/HC]
7	22216-30051		WASHER	ﾜｯｼｬ	1	[HC][TUE/HC]

FIG.128 FRONT GUARD

(F5016410) フロントガード

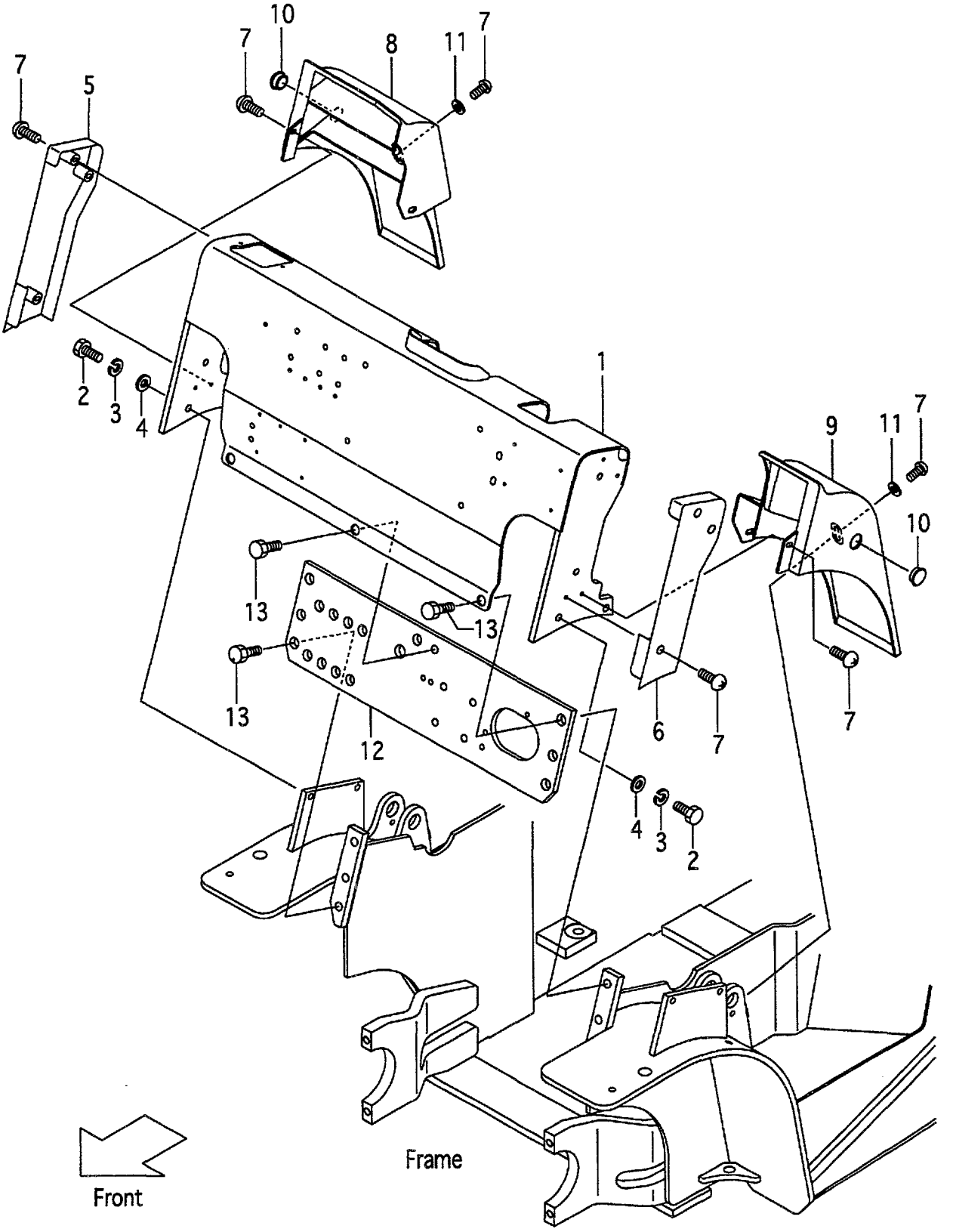

A:FG10C19 FG15C19 FG18C19 C:FD10C19 FD15C19 FD18C19
B:FG10T19 FG15T19 FG18T19 D:FD10T19 FD15T19 FD18T19

Item No	Part No.	Mark	Description		Req'd	Remarks : Serial No.
1	239A6-40201		GUARD,FRONT	ｶﾞｰﾄﾞ	1	
-	539A2-60601		GUARD,FRONT	ｶﾞｰﾄﾞ	1	B,D [EXN]
2	01186-12030		BOLT	ﾎﾞﾙﾄ	4	
-	01109-12030		BOLT,STAINLESS	ﾎﾞﾙﾄ	4	[FC]
3	02013-00012		WASHER	ﾜｯｼｬ	4	[FC]
4	02001-00012		WASHER	ﾜｯｼｬ	4	[FC]
5	218G6-42101		COVER,SIDE,RH	ｶﾊﾞｰ	1	
6	218G6-42111		COVER,SIDE,LH	ｶﾊﾞｰ	1	
7	214A6-42252		SCREW	ｽｸﾘｭ	10	
8	218G6-42201		COVER,TILT-CYL,RH	ｶﾊﾞｰ	1	
9	218G6-42211		COVER,TILT-CYL,LH	ｶﾊﾞｰ	1	
10	514A5-12701		PLUG,HOLE	ﾌﾟﾗｸﾞ	2	
11	02000-20010		WASHER	ﾜｯｼｬ	2	
12	239A6-42001		PLATE,FRONT	ﾌﾟﾚｰﾄ	1	
13	216G6-43561		BOLT,FLANGE	ﾎﾞﾙﾄ	7	

FIG.129 BONNET
(F5016420) ﾎﾞﾝﾈｯﾄ

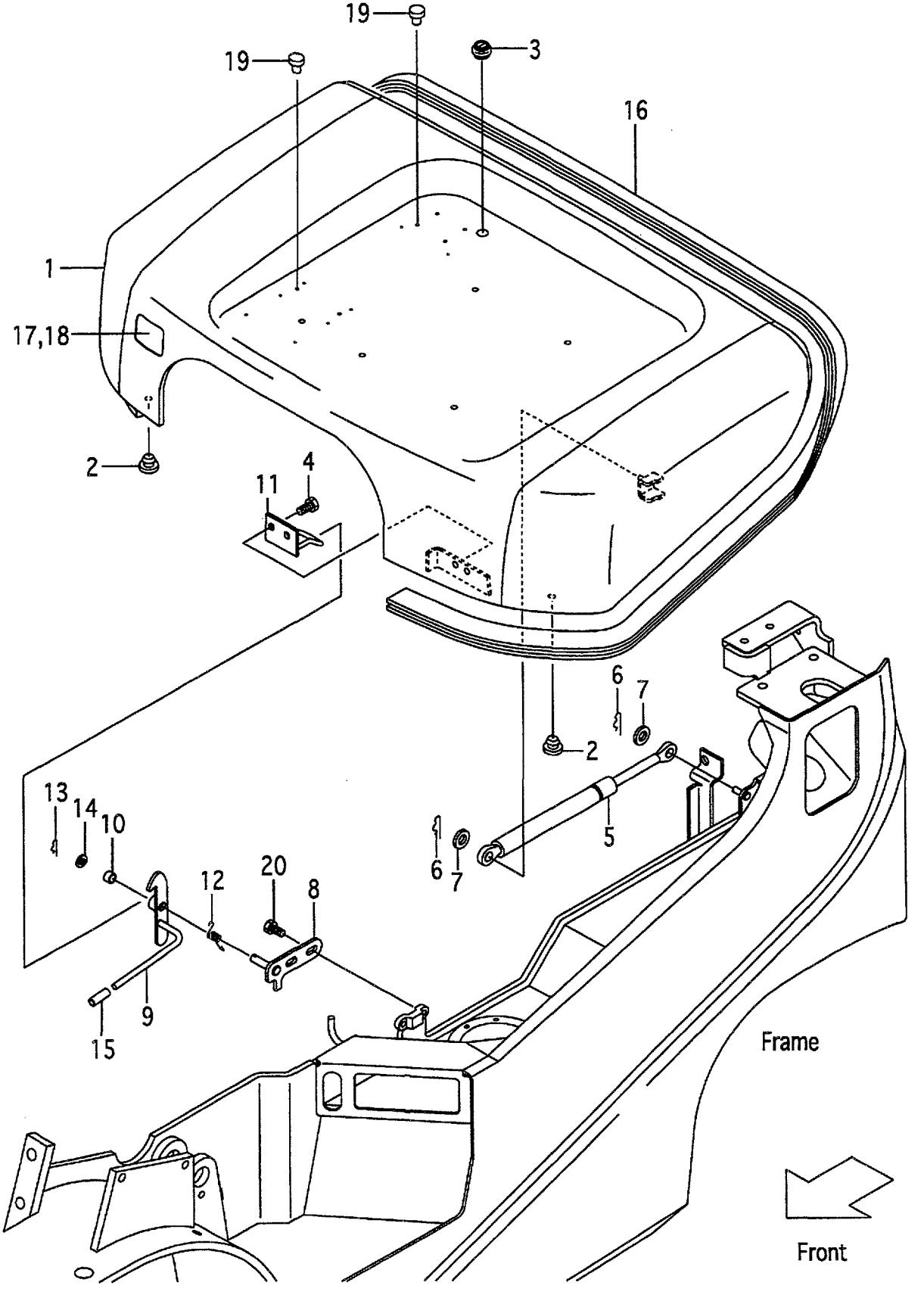

A:FG10C19 FG10T19 FG15C19 FG15T19 FG18C19 FG18T19
B:FD10C19 FD10T19 FD15C19 FD15T19 FD18C19 FD18T19

Item No	Part No.	Mark	Description		Req'd	Remarks : Serial No.
1	218G6-40501		BONNET	ﾎﾞﾝﾈｯﾄ	1	
2	23456-42181		STOPPER,BONNET	ｽﾄｯﾊﾟ	2	
3	27662-63041		GROMMET	ｸﾞﾛﾒｯﾄ	1	
4	01183-08016		BOLT	ﾎﾞﾙﾄ	2	
5	535C2-60401		SPRING,GAS	ｽﾌﾟﾘﾝｸﾞ	1	
6	216H3-92171		PIN,SNAP	ﾋﾟﾝ	2	
7	02000-00008		WASHER	ﾜｯｼｬ	2	
A1	218G6-40521		CATCH-ASSY,BONNET	ｷｬｯﾁ	1	INC.8-14
8	218G6-42451		BRACKET	ﾌﾞﾗｹｯﾄ	1	
9	218G6-42471		LATCH	ﾗｯﾁ	1	
10	23655-22101		BUSHING	ﾌﾞｯｼﾝｸﾞ	1	
11	216G6-42451		HOOK	ﾌｯｸ	1	
12	216G6-42481		SPRING	ｽﾌﾟﾘﾝｸﾞ	1	
13	216H5-42141		PIN,SNAP	ﾋﾟﾝ	1	
14	02000-00010		WASHER	ﾜｯｼｬ	1	
15	216G6-52291		CAP	ｷｬｯﾌﾟ	1	
16	218G6-42641		RUBBER,SEAL,BONNET	ﾗﾊﾞｰ	1	
17	209P6-40401		INSULATOR	ｲﾝｼｭﾚｰﾀ	1	
18	216G6-42541		CLIP	ｸﾘｯﾌﾟ	10	
19	25596-42361		RIVET,NYLON	ﾘﾍﾞｯﾄ	6	
20	01185-08020		BOLT	ﾎﾞﾙﾄ	2	

FIG.130 RADIATOR COVER

(F5016430) ﾗｼﾞｴｰﾀｶﾊﾞｰ

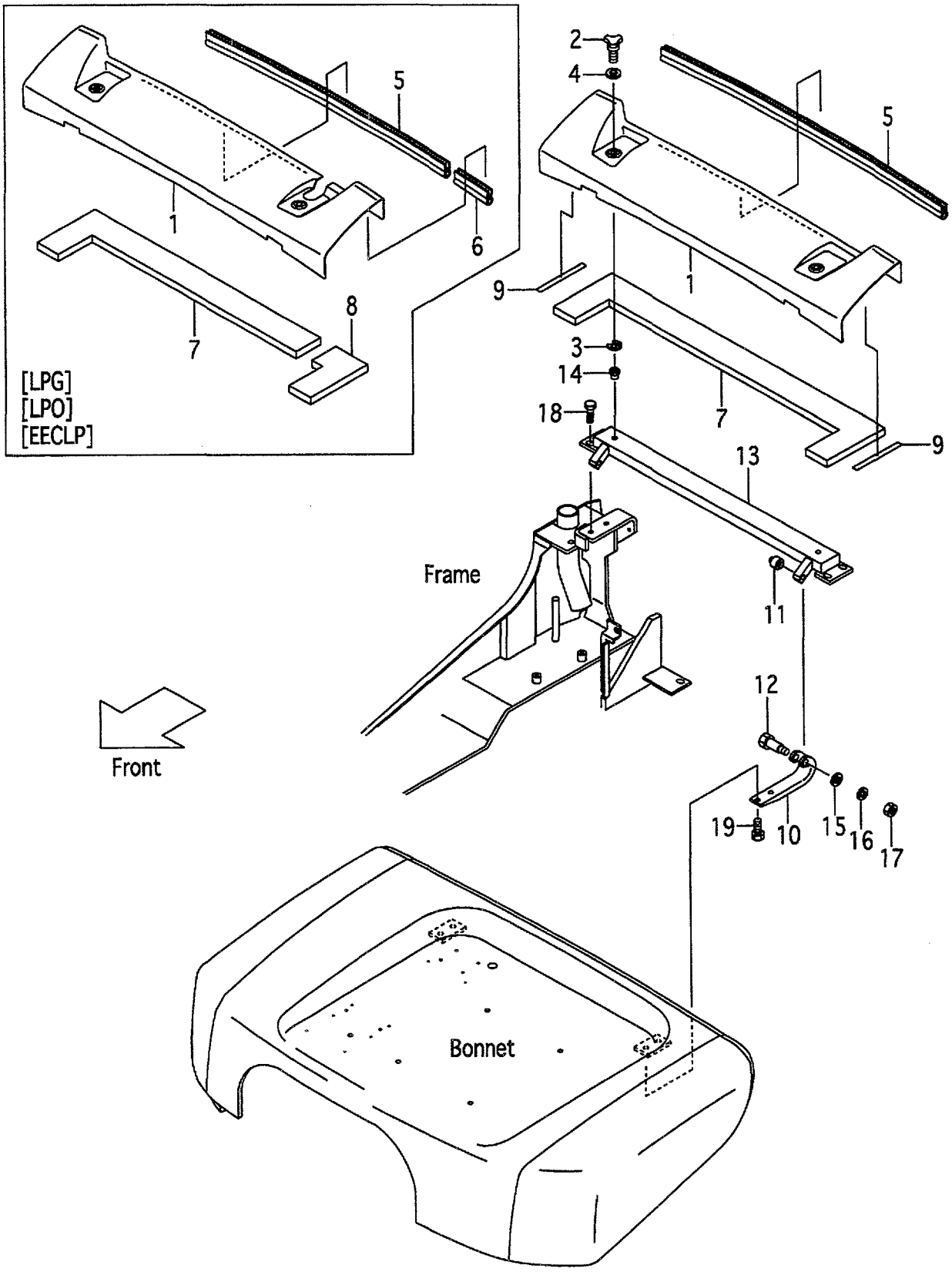

A:FG10C19 D:FG15T19 G:FD10C19 J:FD15T19
B:FG10T19 E:FG18C19 H:FD10T19 K:FD18C19
C:FG15C19 F:FG18T19 I:FD15C19 L:FD18T19

FIG.130
(F5016430)

Item No	Part No.	Mark	Description		Req'd	Remarks : Serial No.
1	218G6-40301		COVER,RADIATOR	ｶﾊﾞｰ	1	
-	518G0-52601		COVER,RADIATOR	ｶﾊﾞｰ	1	A,B [LPG][LPO][EECLP]
-	518G0-52501		COVER,RADIATOR	ｶﾊﾞｰ	1	C,D,E,F [LPG][LPO][EECLP]
2	222A6-42451		BOLT,KNOB	ﾎﾞﾙﾄ	2	
-	01181-08016		BOLT	ﾎﾞﾙﾄ	2	B,D,F,H,J,L [EXE][EXN]
3	222A6-42461		E-RING	Eﾘﾝｸﾞ	2	
4	02000-00008		WASHER	ﾜｯｼｬ	2	
5	218G6-42391		RUBBER,SEAL	ﾗﾊﾞｰ	1	
-	518G0-52531		RUBBER,SEAL	ﾗﾊﾞｰ	1	[LPG][LPO][EECLP]
6	518G0-52541		RUBBER,SEAL	ﾗﾊﾞｰ	1	[LPG][LPO][EECLP]
7	218G6-42291		RUBBER,RAD.COVER	ﾗﾊﾞｰ	1	
-	518G0-52511		RUBBER,RAD.COVER,RH	ﾗﾊﾞｰ	1	[LPG][LPO][EECLP]
8	518G0-52521		RUBBER,RAD.COVER,LH	ﾗﾊﾞｰ	1	[LPG][LPO][EECLP]
9	234A6-43121		RUBBER	ﾗﾊﾞｰ	2	
10	216G6-42911		HINGE	ﾋﾝｼﾞ	2	
11	216G6-43601		BUSHING	ﾌﾞｯｼﾝｸﾞ	2	
12	216G6-42931		BOLT	ﾎﾞﾙﾄ	2	
13	218G6-42301		BRACKET,HINGE	ﾌﾞﾗｹｯﾄ	1	
14	514A5-12011		RIVET,POP	ﾘﾍﾞｯﾄ	2	
15	02000-00006		WASHER	ﾜｯｼｬ	2	
16	02010-00006		WASHER	ﾜｯｼｬ	2	
17	01400-00006		NUT	ﾅｯﾄ	2	
18	01186-10020		BOLT	ﾎﾞﾙﾄ	4	
19	01183-08016		BOLT	ﾎﾞﾙﾄ	4	

FIG.131 FLOOR BOARD

(F5016440) ﾌﾛｱﾎﾞｰﾄﾞ

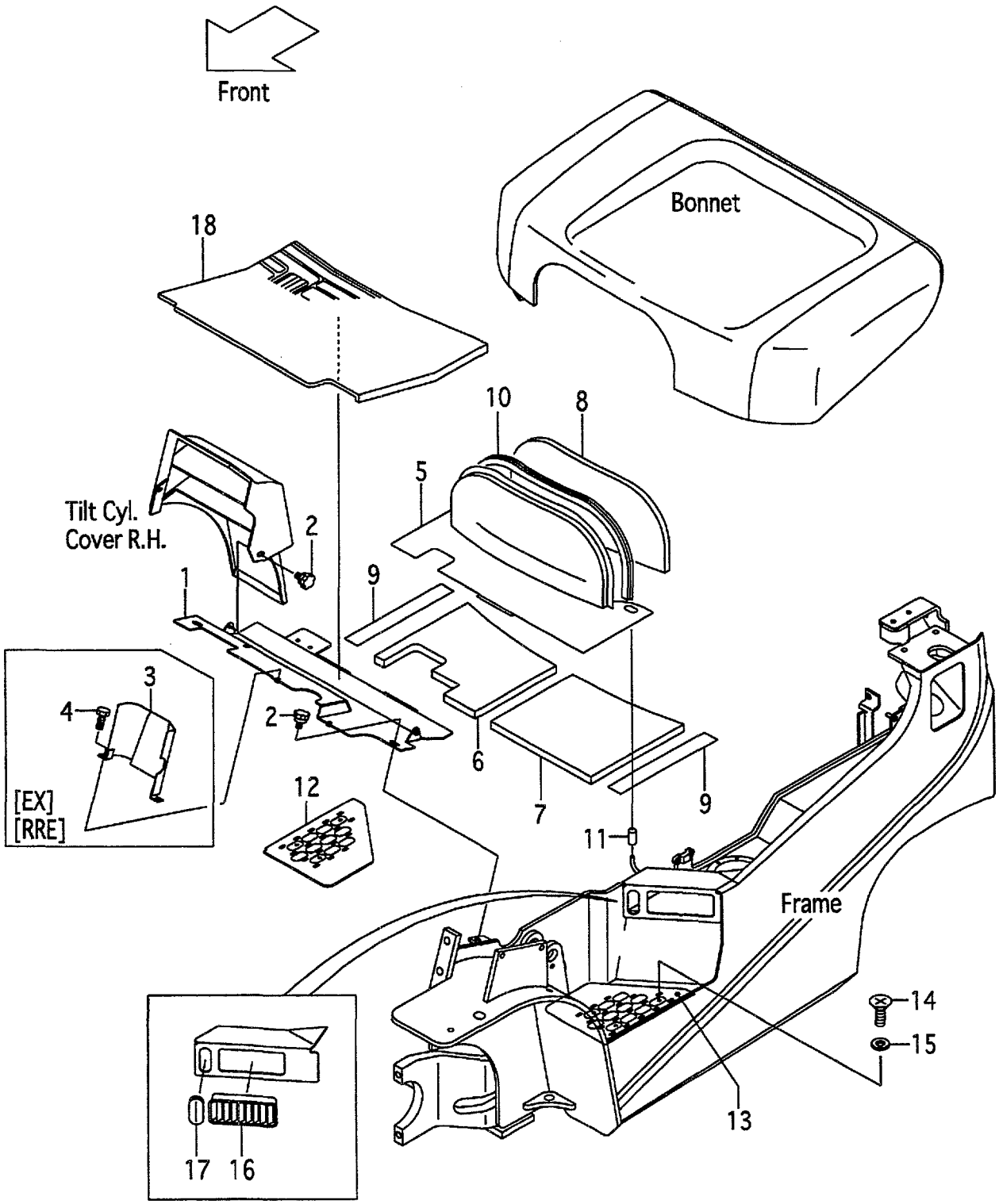

A:FG10C19 FG15C19 FG18C19 C:FD10C19 FD15C19 FD18C19
B:FG10T19 FG15T19 FG18T19 D:FD10T19 FD15T19 FD18T19

Item No	Part No.	Mark	Description		Req'd	Remarks : Serial No.
1	239A6-50112		BOARD,FLOOR,FRONT	ﾎﾞｰﾄﾞ	1	
2	256C5-12671		BOLT,KNOB	ﾎﾞﾙﾄ	4	
3	239A6-52601		COVER,FRONT	ｶﾊﾞｰ	1	A,C [EX][RRE]
-	239B6-52601		COVER,FRONT	ｶﾊﾞｰ	1	B,D [EX][RRE]
4	01186-06012		BOLT	ﾎﾞﾙﾄ	2	[EX][RRE]
5	239A6-50302		BOARD,FLOOR,REAR	ﾎﾞｰﾄﾞ	1	A,C
-	239B6-50302		BOARD,FLOOR,REAR	ﾎﾞｰﾄﾞ	1	B,D
6	239A6-52131		INSULATOR,REAR,RH	ｲﾝｼｭﾚｰﾀ	1	
7	239A6-52141		INSULATOR,REAR,LH	ｲﾝｼｭﾚｰﾀ	1	
8	216G6-52231		INSULATOR,REAR	ｲﾝｼｭﾚｰﾀ	1	
9	239A6-52171		RUBBER,SEAL	ﾗﾊﾞｰ	2	
10	216G6-52271		EDGING	ｴｯｼﾞﾝｸﾞ	1	
11	216G6-52291		CAP	ｷｬｯﾌﾟ	2	
12	234A6-42042		STEP,NON-SKID,RH	ｽﾃｯﾌﾟ	1	
13	234A6-42072		STEP,NON-SKID,LH	ｽﾃｯﾌﾟ	1	
14	214A6-42911		SCREW	ｽｸﾘｭ	6	
15	02000-20010		WASHER	ﾜｯｼｬ	6	
16	230C1-02041		COVER,AIR-INTAKE	ｶﾊﾞｰ	2	
17	209P7-42161		BOOT,LEVER	ﾌﾞｰﾂ	1	
18	239A6-52221		MAT,FLOOR	ﾏｯﾄ	1	A,C
-	239B6-52221		MAT,FLOOR	ﾏｯﾄ	1	B,D

FIG.132 TRAY
(F5016450) トレー

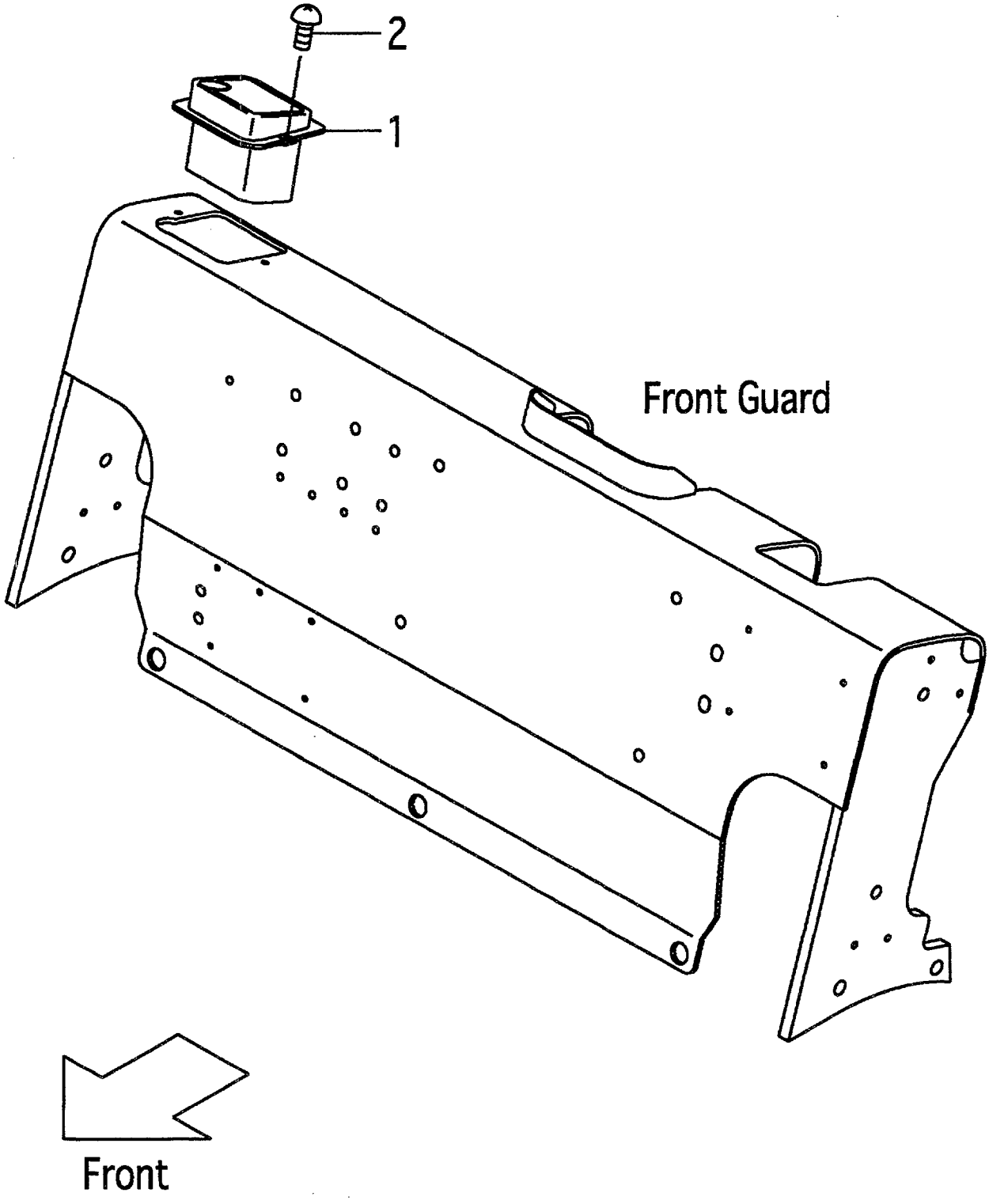

FIG.132
(F5016450)

A:FG10C19 FG10T19 FG15C19 FG15T19 FG18C19 FG18T19
B:FD10C19 FD10T19 FD15C19 FD15T19 FD18C19 FD18T19

Item No	Part No.	Mark	Description	Req'd	Remarks : Serial No.
1	216G9-32001		TRAY トレー	1	
2	214A6-42252		SCREW スクリュ	2	

FIG.133 TRAY [AW071][RWL][LPG][LPO][BB SW][BBASW]

(F5016460) トレー

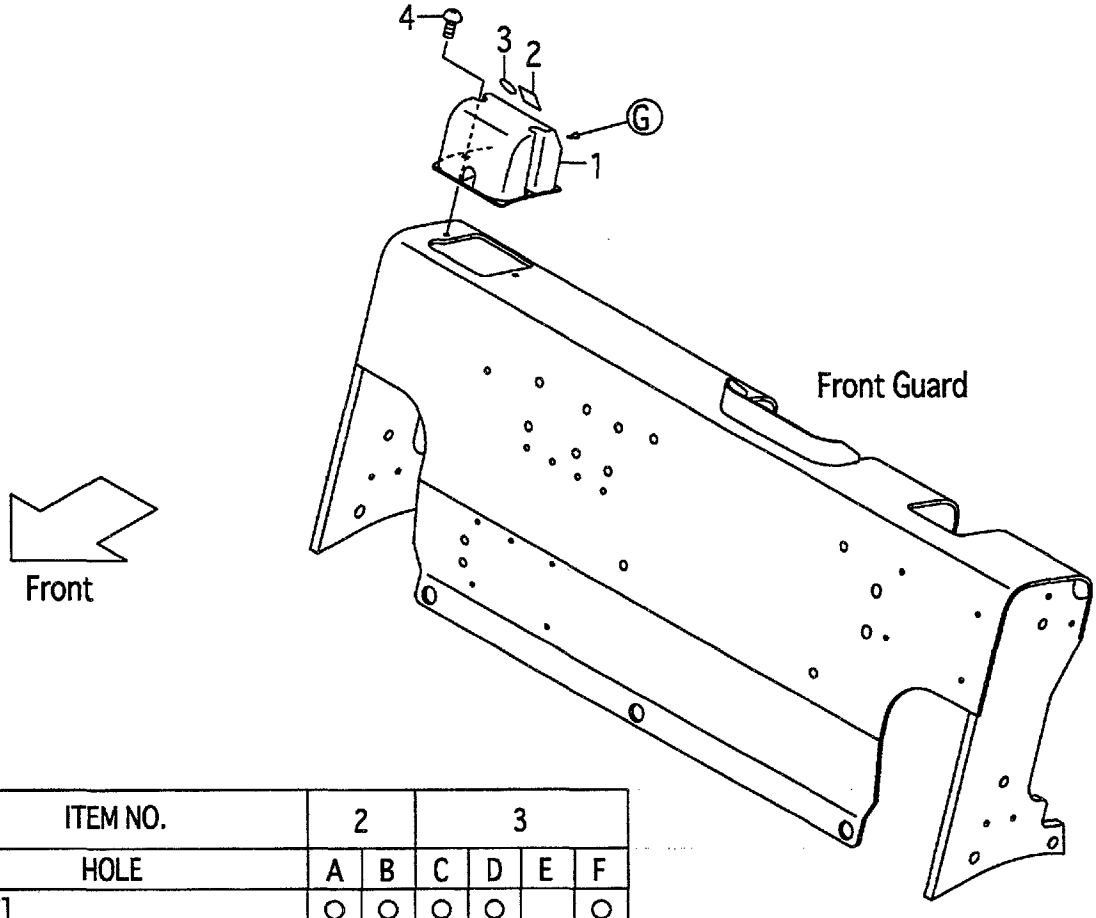

ITEM NO.		2		3			
HOLE		A	B	C	D	E	F
OPTION	[AW]	○	○	○	○		○
	[RWL]	○		○	○	○	
	[LPG]		○	○		○	○
	[BB SW][BBASW]	○	○	○	○		○
	[AW/RWL]	○		○	○		
	[AW/LPG]		○	○			○
	[AW/BB SW·BBASW]	○	○		○		○
	[RWL/BB SW·BBASW]	○		○	○		
	[AW/RWL/BB SW·BBASW]	○			○		

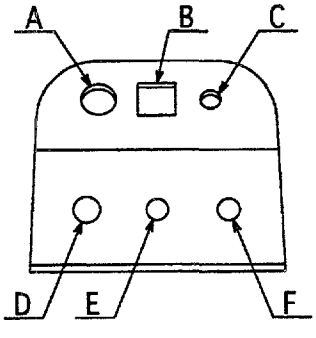

View from G

A:FG10C19 FG10T19 FG15C19 FG15T19 FG18C19 FG18T19
B:FD10C19 FD10T19 FD15C19 FD15T19 FD18C19 FD18T19

Item No	Part No.	Mark	Description		Req'd	Remarks : Serial No.
1	516G1-42251		BOX,SWITCH	ﾎﾞｯｸｽ	1	[AW071][RWL][BB SW][BBASW]
-	516G1-42251		BOX,SWITCH	ﾎﾞｯｸｽ	1	A [LPG][LPO][AW071/LPG]
-	516G1-42251		BOX,SWITCH	ﾎﾞｯｸｽ	1	[AW071/RWL][RWL/BB SW] [RWL/BBASW]
-	516G1-42251		BOX,SWITCH	ﾎﾞｯｸｽ	1	[AW071/BB SW][AW071/BBASW]
-	516G1-42251		BOX,SWITCH	ﾎﾞｯｸｽ	1	[AW071/RWL/BB SW] [AW071/RWL/BBASW]
2	229F6-42201		SEAL,PANEL-COVER,A	ｼｰﾙ	2	[AW071][BB SW][BBASW] [AW071/BB SW][AW071/BBASW]
-	229F6-42201		SEAL,PANEL-COVER,A	ｼｰﾙ	1	[RWL][AW071/RWL][RWL/BB SW [RWL/BBASW]
-	229F6-42201		SEAL,PANEL-COVER,A	ｼｰﾙ	1	A [LPG][LPO][AW071/LPG]
-	229F6-42201		SEAL,PANEL-COVER,A	ｼｰﾙ	1	[AW071/RWL/BB SW] [AW071/RWL/BBASW]
3	229F6-42211		SEAL,PANEL-COVER,B	ｼｰﾙ	3	[AW071][RWL][BB SW][BBASW]
-	229F6-42211		SEAL,PANEL-COVER,B	ｼｰﾙ	3	A [LPG][LPO][AW071/LPG]
-	229F6-42211		SEAL,PANEL-COVER,B	ｼｰﾙ	2	[AW071/RWL][RWL/BB SW] [RWL/BBASW]
-	229F6-42211		SEAL,PANEL-COVER,B	ｼｰﾙ	2	[AW071/BB SW][AW071/BBASW]
-	229F6-42211		SEAL,PANEL-COVER,B	ｼｰﾙ	1	[AW071/RWL/BB SW] [AW071/RWL/BBASW]
4	214A6-42252		SCREW	ｽｸﾘｭ	2	[AW071][RWL][BB SW][BBASW]
-	214A6-42252		SCREW	ｽｸﾘｭ	2	A [LPG][LPO][AW071/LPG]
-	214A6-42252		SCREW	ｽｸﾘｭ	2	[AW071/RWL][RWL/BB SW] [RWL/BBASW]
-	214A6-42252		SCREW	ｽｸﾘｭ	2	[AW071/BB SW][AW071/BBASW]
-	214A6-42252		SCREW	ｽｸﾘｭ	2	[AW071/RWL/BB SW] [AW071/RWL/BBASW]

FIG.134 TRAY [RWL/LPG][AW071/RWL/LPG]

(F5016470) トレー

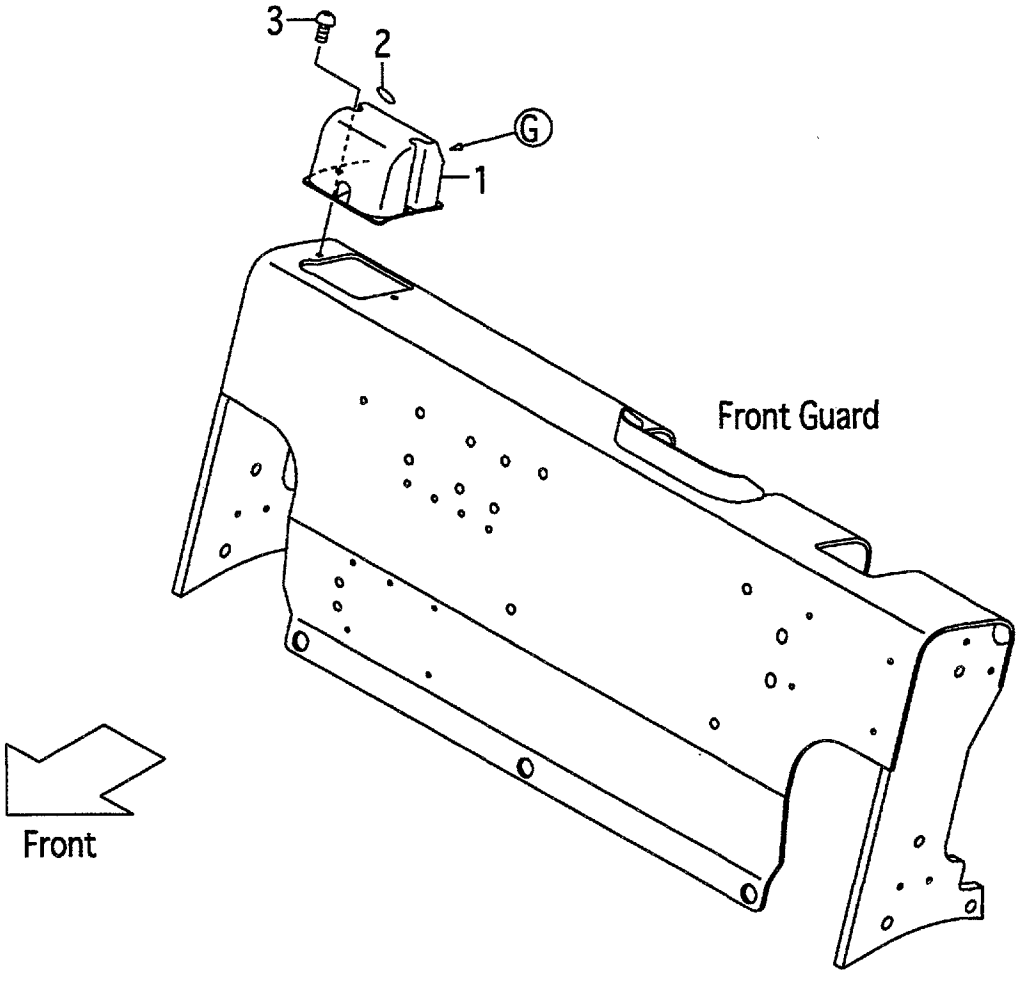

ITEM NO.				2			
HOLE		A	B	C	D	E	F
OPTION	[RWL/LPG]			○		○	
	[AW/RWL/LPG]			○			

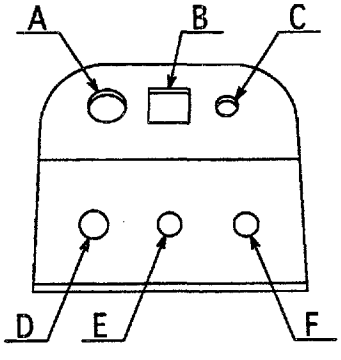

View from G

A:FG10C19 FG10T19 FG15C19 FG15T19 FG18C19 FG18T19

Item No	Part No.	Mark	Description	Req'd	Remarks : Serial No.
1	516G1-42251		BOX,SWITCH ﾎﾞｯｸｽ	1	[RWL/LPG][AW071/RWL/LPG]
2	229F6-42211		SEAL,PANEL-COVER,B ｼｰﾙ	2	[RWL/LPG]
-	229F6-42211		SEAL,PANEL-COVER,B ｼｰﾙ	1	[AW071/RWL/LPG]
3	214A6-42252		SCREW ｽｸﾘｭ	2	[RWL/LPG][AW071/RWL/LPG]

FIG.135 TRAY [SM][AM][TPM]

(F5016480) トレー

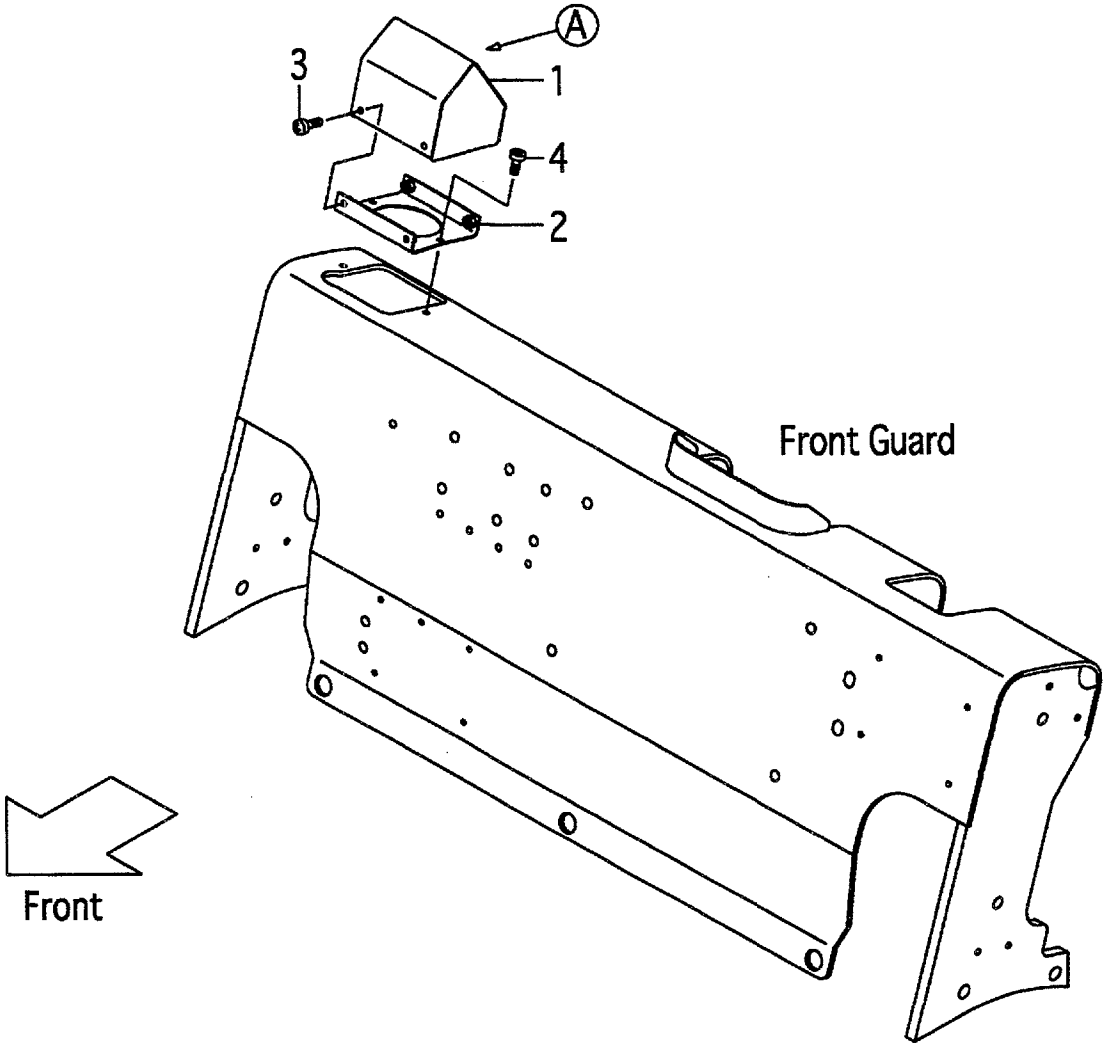

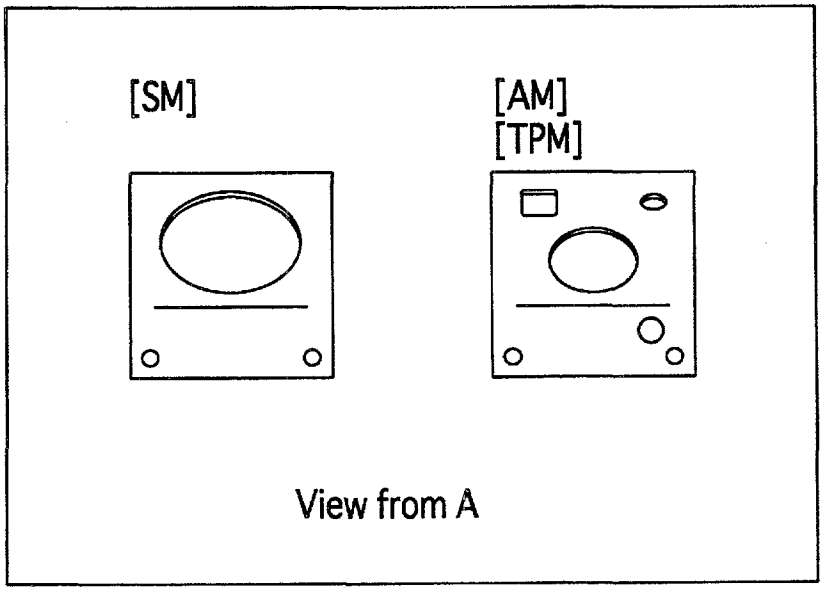

FIG.135

(F5016480)

A:FG10C19 FG10T19 FG15C19 FG15T19 FG18C19 FG18T19
B:FD10C19 FD10T19 FD15C19 FD15T19 FD18C19 FD18T19

Item No	Part No.	Mark	Description		Req'd	Remarks : Serial No.
1	516G7-50401		BOX,METER	ﾎﾞｯｸｽ	1	[SM]
-	516G6-90401		BOX,METER	ﾎﾞｯｸｽ	1	[AM][TPM]
2	516G1-42021		BRACKET	ﾌﾞﾗｹｯﾄ	1	[SM][AM][TPM]
3	214A6-42771		SCREW	ｽｸﾘｭ	4	[SM][AM][TPM]
4	214A6-42252		SCREW	ｽｸﾘｭ	2	[SM][AM][TPM]

FIG.136 TRAY [SM/(LPG,BB SW,BBASW)][SM/(LPG,BB SW,BBASW)/RWL]

(F5016490) トレー

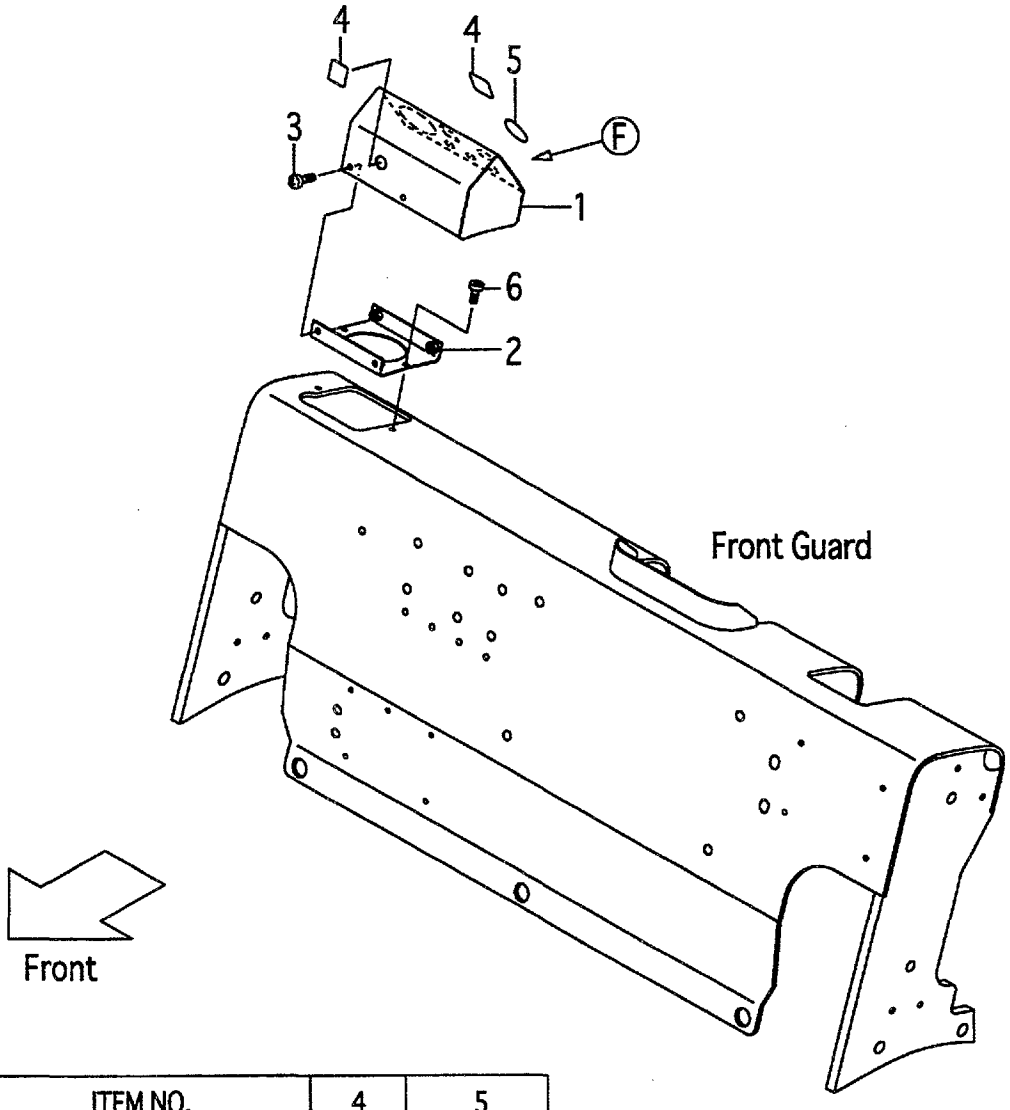

ITEM NO.		4		5		
HOLE		A	B	C	D	E
OPTION	[SM/LPG]		○		○	○
	[SM/BB SW·BBASW]	○	○		○	○
	[SM/LPG/RWL]				○	
	[SM/BB SW·BBASW/RWL]	○			○	

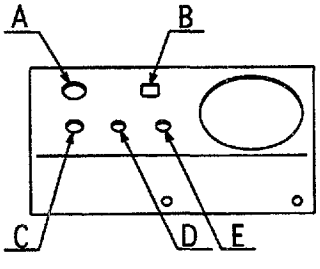

View from F

FIG.136

(F5016490)

A:FG10C19 FG10T19 FG15C19 FG15T19 FG18C19 FG18T19
B:FD10C19 FD10T19 FD15C19 FD15T19 FD18C19 FD18T19

Item No	Part No.	Mark	Description		Req'd	Remarks : Serial No.
1	516G7-50201		BOX,METER & SWITCH	ﾎﾞｯｸｽ	1	A [SM/LPG][SM/LPG/RWL]
-	516G7-50201		BOX,METER & SWITCH	ﾎﾞｯｸｽ	1	[SM/BB SW][SM/BBASW] [SM/BB SW/RWL][SM/BBASW/RWL]
2	516G1-42021		BRACKET	ﾌﾞﾗｹｯﾄ	1	A [SM/LPG][SM/LPG/RWL]
-	516G1-42021		BRACKET	ﾌﾞﾗｹｯﾄ	1	[SM/BB SW][SM/BBASW] [SM/BB SW/RWL][SM/BBASW/RWL]
3	214A6-42771		SCREW	ｽｸﾘｭ	4	A [SM/LPG][SM/LPG/RWL]
-	214A6-42771		SCREW	ｽｸﾘｭ	4	[SM/BB SW][SM/BBASW] [SM/BB SW/RWL][SM/BBASW/RWL]
4	229F6-42201		SEAL,PANEL-COVER,A	ｼｰﾙ	2	A [SM/LPG]
-	229F6-42201		SEAL,PANEL-COVER,A	ｼｰﾙ	3	[SM/BB SW][SM/BBASW]
-	229F6-42201		SEAL,PANEL-COVER,A	ｼｰﾙ	1	A [SM/LPG/RWL]
-	229F6-42201		SEAL,PANEL-COVER,A	ｼｰﾙ	2	[SM/BB SW/RWL][SM/BBASW/RWL]
5	229F6-42211		SEAL,PANEL-COVER,B	ｼｰﾙ	2	A [SM/LPG]
-	229F6-42211		SEAL,PANEL-COVER,B	ｼｰﾙ	2	[SM/BB SW][SM/BBASW]
-	229F6-42211		SEAL,PANEL-COVER,B	ｼｰﾙ	1	A [SM/LPG/RWL]
-	229F6-42211		SEAL,PANEL-COVER,B	ｼｰﾙ	1	[SM/BB SW/RWL][SM/BBASW/RWL]
6	214A6-42361		SCREW	ｽｸﾘｭ	2	A [SM/LPG][SM/LPG/RWL]
-	214A6-42361		SCREW	ｽｸﾘｭ	2	[SM/BB SW][SM/BBASW] [SM/BB SW/RWL][SM/BBASW/RWL]

FIG.137 TRAY [SM/AW071/RWL]

(F50164A0) トレー

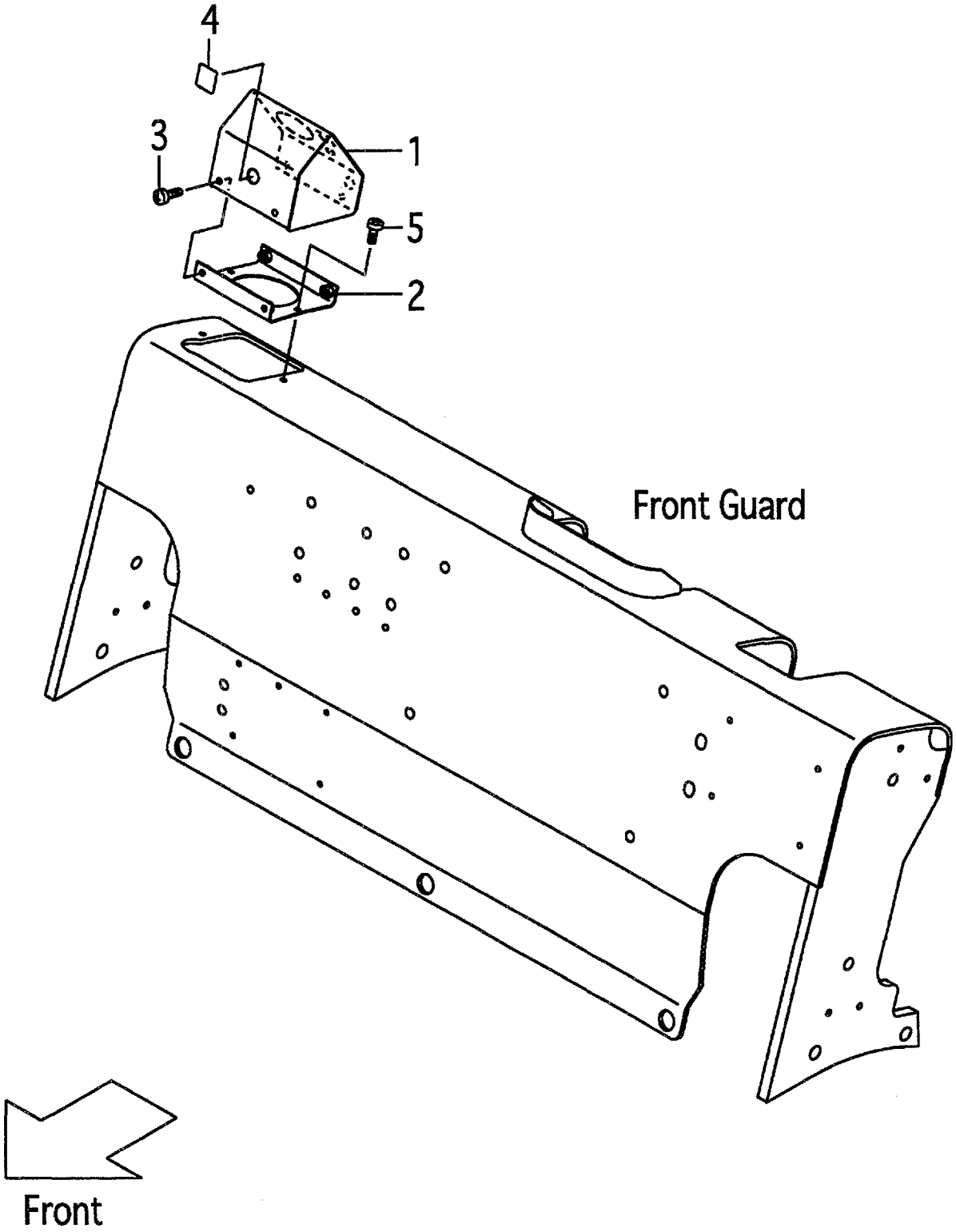

FIG.137
(F50164A0)

A:FG10C19 FG10T19 FG15C19 FG15T19 FG18C19 FG18T19
B:FD10C19 FD10T19 FD15C19 FD15T19 FD18C19 FD18T19

Item No	Part No.	Mark	Description	Req'd	Remarks : Serial No.
1	516G7-50211		BOX,METER & SWITCH ﾎﾞｯｸｽ	1	[SM/AW071/RWL]
2	516G1-42021		BRACKET ﾌﾞﾗｹｯﾄ	1	[SM/AW071/RWL]
3	214A6-42771		SCREW ｽｸﾘｭ	4	[SM/AW071/RWL]
4	229F6-42201		SEAL,PANEL-COVER,A ｼｰﾙ	1	[SM/AW071/RWL]
5	214A6-42361		SCREW ｽｸﾘｭ	2	[SM/AW071/RWL]

FIG.138 FRONT GUARD BOOTS [FC]

(F50164B0) ﾌﾛﾝﾄｶﾞｰﾄﾞﾌﾞｰﾂ

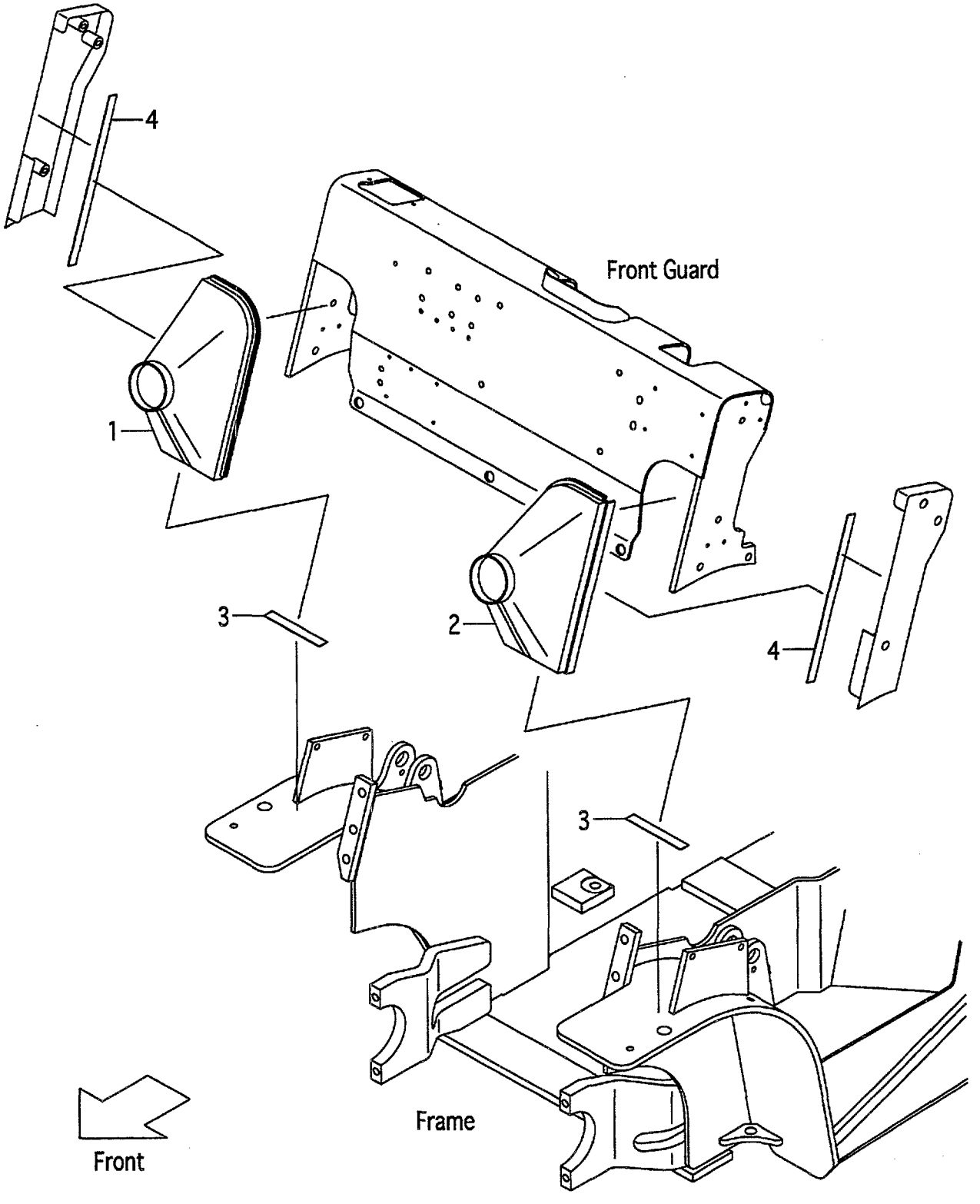

A:FG10C19 FG10T19 FG15C19 FG15T19 FG18C19 FG18T19
B:FD10C19 FD10T19 FD15C19 FD15T19 FD18C19 FD18T19

Item No	Part No.	Mark	Description	Req'd	Remarks : Serial No.
1	518G3-70201		BOOT,RH ﾌﾞｰﾂ	1	[FC]
2	518G3-70211		BOOT,LH ﾌﾞｰﾂ	1	[FC]
3	577H3-72181		TAPE ﾃｰﾌﾟ	2	[FC]
4	518G3-72301		TAPE ﾃｰﾌﾟ	2	[FC]

FIG.139 SEAT

(F5016810) シート

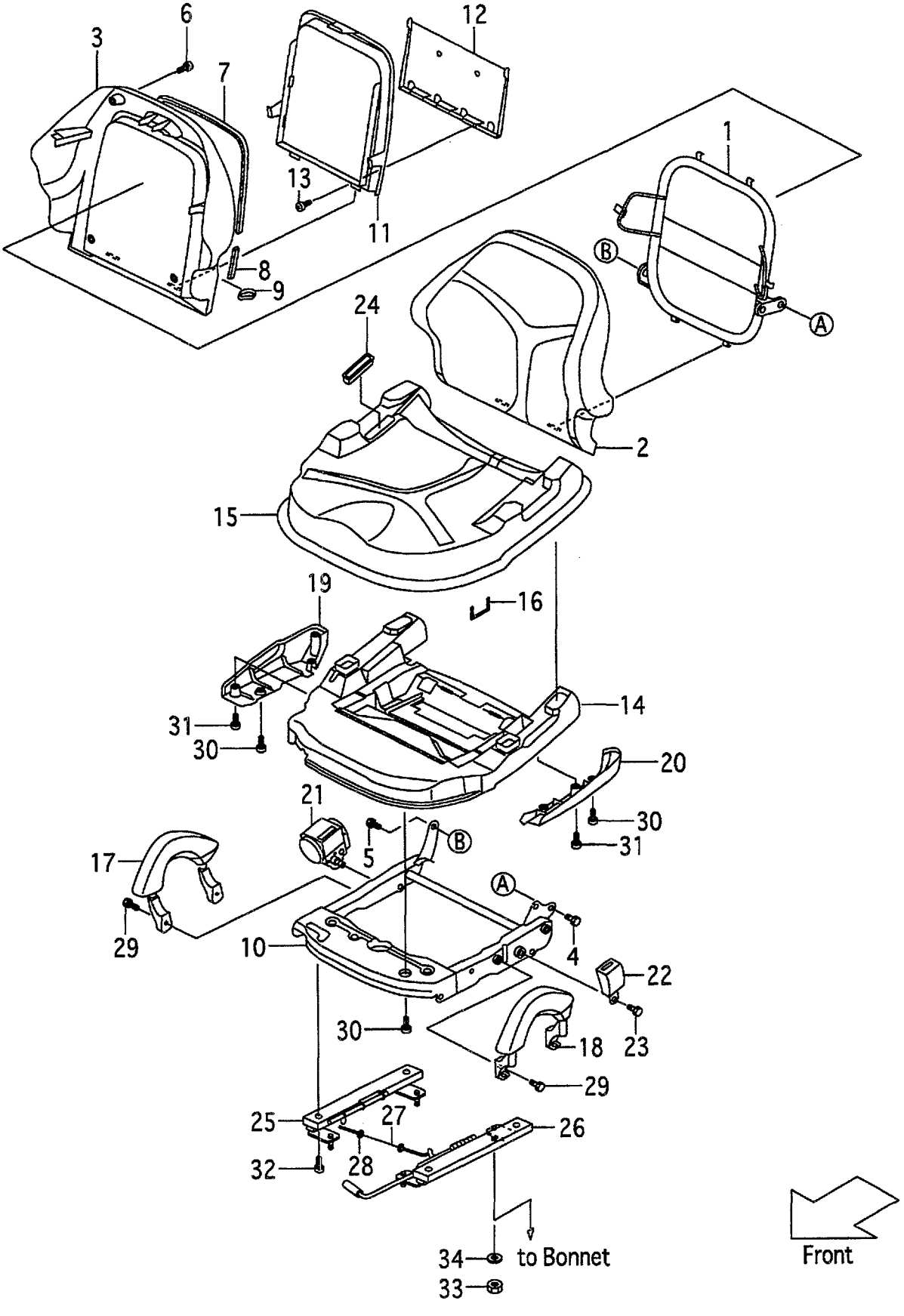

A:FG10C19 FG10T19 FG15C19 FG15T19 FG18C19 FG18T19
B:FD10C19 FD10T19 FD15C19 FD15T19 FD18C19 FD18T19

Item No	Part No.	Mark	Description		Req'd	Remarks : Serial No.
A1	216G6-82501		SEAT-ASSY	ｼｰﾄｱｯｾﾝ	1	INC.1-32
1	234A6-82001		FRAME,BACK	ﾌﾚｰﾑ	1	
2	234A6-82031		PAD,BACK	ﾊﾟｯﾄﾞ	1	
3	234A6-82041		COVER	ｶﾊﾞｰ	1	
4	01184-10020		BOLT	ﾎﾞﾙﾄ	2	
5	234A6-82191		BOLT	ﾎﾞﾙﾄ	1	
6	234A6-82201		SCREW	ｽｸﾘｭ	4	
7	234A6-82221		SEAL,A	ｼｰﾙ	1	
8	234A6-82231		SEAL,B	ｼｰﾙ	2	
9	234A6-82241		MOLE	ﾓｰﾙ	1	
10	216G6-82611		FRAME,UPPER	ﾌﾚｰﾑ	1	
11	234A6-82051		LID	ﾘｯﾄﾞ	1	
12	234A6-82061		RACK	ﾗｯｸ	1	
13	234A6-82211		SCREW	ｽｸﾘｭ	2	
14	216G6-82601		PLATE,BOTTOM	ﾌﾟﾚｰﾄ	1	
15	234A6-82021		PAD,CUSHION	ﾊﾟｯﾄﾞ	1	
16	NO PART NO.	#	STAPLE	ｽﾃｰﾌﾟﾙ	6	
17	234A6-82091		GRIP,RH	ｸﾞﾘｯﾌﾟ	1	
18	234A6-82101		GRIP,LH	ｸﾞﾘｯﾌﾟ	1	
19	234A6-82071		COVER,RH	ｶﾊﾞｰ	1	
20	234A6-82081		COVER,LH	ｶﾊﾞｰ	1	
21	234A6-82131		BELT	ﾍﾞﾙﾄ	1	
22	234A6-82141		BACKLE	ﾊﾞｯｸﾙ	1	
23	234A6-82181		BOLT	ﾎﾞﾙﾄ	2	
24	234A6-82151		COVER,BELT	ｶﾊﾞｰ	1	
25	234A6-82271		RAIL,SLIDE C	ﾚｰﾙ	1	
26	216G6-82621		RAIL,SLIDE A	ﾚｰﾙ	1	
27	234A6-82281		CABLE	ｹｰﾌﾞﾙ	1	
28	234A6-82291		WASHER	ﾜｯｼｬ	2	
29	01184-10020		BOLT	ﾎﾞﾙﾄ	4	
30	234A6-82201		SCREW	ｽｸﾘｭ	6	
31	234A6-82211		SCREW	ｽｸﾘｭ	3	
32	234A6-82301		BOLT	ﾎﾞﾙﾄ	4	
33	01400-00008		NUT	ﾅｯﾄ	4	
34	02010-00008		WASHER	ﾜｯｼｬ	4	

FIG.140 SEAT [EX][SUS001][SETS30/EX]

(F5016820) シート

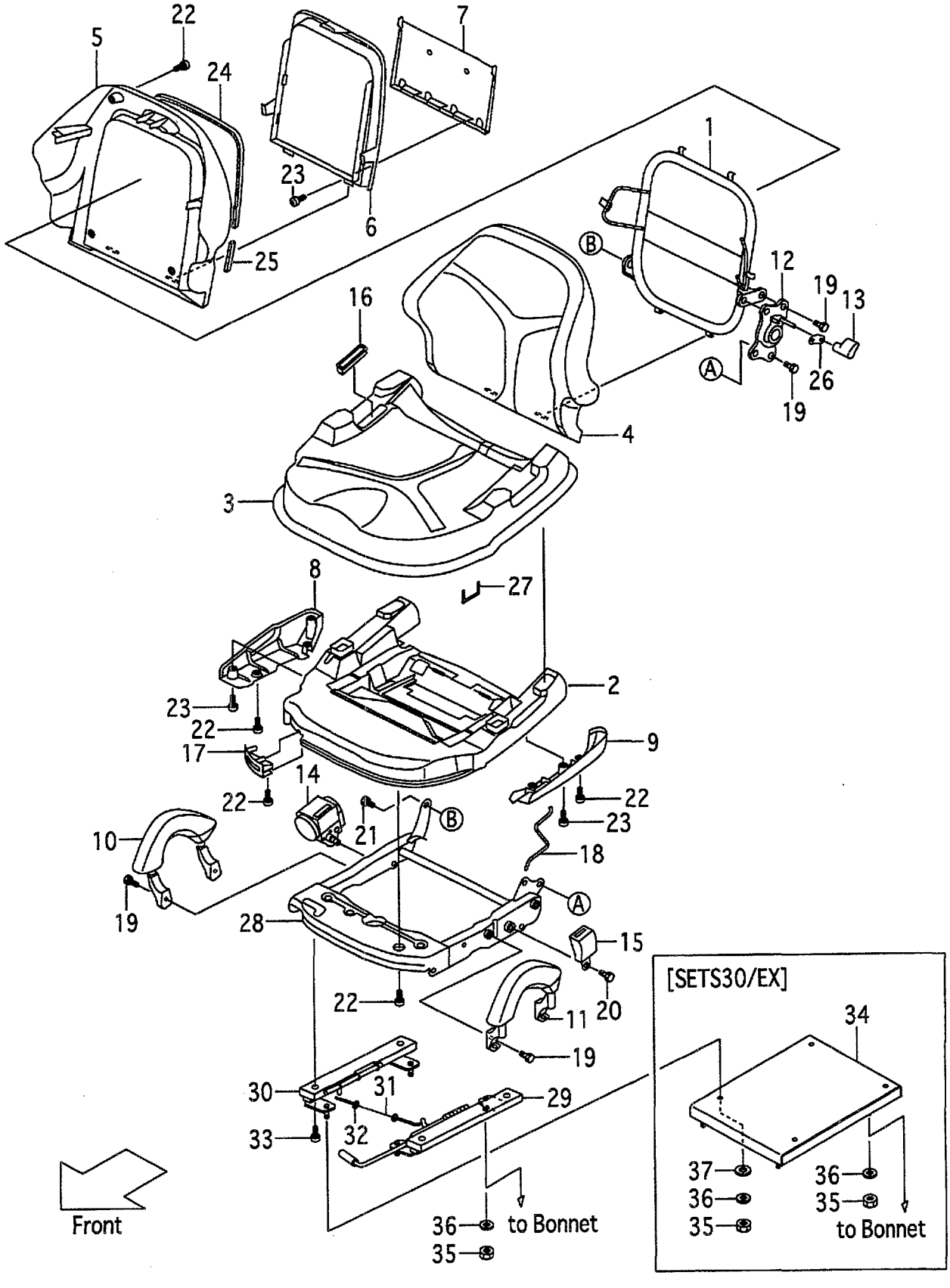

A:FG10C19 FG10T19 FG15C19 FG15T19 FG18C19 FG18T19
B:FD10C19 FD10T19 FD15C19 FD15T19 FD18C19 FD18T19

Item No	Part No.	Mark	Description		Req'd	Remarks : Serial No.
A1	234A6-81001		SEAT-ASSY	ｼｰﾄｱｯｾﾝ	1	[EX][SUS001][SETS30/EX]
						INC.1-33
1	234A6-82001		FRAME	ﾌﾚｰﾑ	1	[EX][SUS001][SETS30/EX]
2	234A6-82011		PLATE,BOTTOM	ﾌﾟﾚｰﾄ	1	[EX][SUS001][SETS30/EX]
3	234A6-82021		PAD,CUSHION	ﾊﾟｯﾄﾞ	1	[EX][SUS001][SETS30/EX]
4	234A6-82031		PAD,BACK	ﾊﾟｯﾄﾞ	1	[EX][SUS001][SETS30/EX]
5	234A6-82041		COVER	ｶﾊﾞｰ	1	[EX][SUS001][SETS30/EX]
6	234A6-82051		LID	ﾘｯﾄﾞ	1	[EX][SUS001][SETS30/EX]
7	234A6-82061		RACK	ﾗｯｸ	1	[EX][SUS001][SETS30/EX]
8	234A6-82071		COVER,RH	ｶﾊﾞｰ	1	[EX][SUS001][SETS30/EX]
9	234A6-82081		COVER,LH	ｶﾊﾞｰ	1	[EX][SUS001][SETS30/EX]
10	234A6-82091		GRIP,RH	ｸﾞﾘｯﾌﾟ	1	[EX][SUS001][SETS30/EX]
11	234A6-82101		GRIP,LH	ｸﾞﾘｯﾌﾟ	1	[EX][SUS001][SETS30/EX]
12	234A6-82111		DVC	ﾃﾞｨｰﾌﾞｲｼｰ	1	[EX][SUS001][SETS30/EX]
13	234A6-82121		KNOB	ﾉﾌﾞ	1	[EX][SUS001][SETS30/EX]
14	234A6-82131		BELT	ﾍﾞﾙﾄ	1	[EX][SUS001][SETS30/EX]
15	234A6-82141		BACKLE	ﾊﾞｯｸﾙ	1	[EX][SUS001][SETS30/EX]
16	234A6-82151		COVER,BELT	ｶﾊﾞｰ	1	[EX][SUS001][SETS30/EX]
17	234A6-82161		COVER,ADJUSTER	ｶﾊﾞｰ	1	[EX][SUS001][SETS30/EX]
18	234A6-82171		SPRING	ｽﾌﾟﾘﾝｸﾞ	1	[EX][SUS001][SETS30/EX]
19	01184-10020		BOLT	ﾎﾞﾙﾄ	8	[EX][SUS001][SETS30/EX]
20	234A6-82181		BOLT	ﾎﾞﾙﾄ	2	[EX][SUS001][SETS30/EX]
21	234A6-82191		BOLT	ﾎﾞﾙﾄ	1	[EX][SUS001][SETS30/EX]
22	234A6-82201		SCREW	ｽｸﾘｭ	14	[EX][SUS001][SETS30/EX]
23	234A6-82211		SCREW	ｽｸﾘｭ	5	[EX][SUS001][SETS30/EX]
24	234A6-82221		SEAL,A	ｼｰﾙ	1	[EX][SUS001][SETS30/EX]
25	234A6-82231		SEAL,B	ｼｰﾙ	2	[EX][SUS001][SETS30/EX]
26	234A6-82241		MOLE	ﾓｰﾙ	1	[EX][SUS001][SETS30/EX]
27	NO PART NO.	#	STAPLE	ｽﾃｰﾌﾟﾙ	30	[EX][SUS001][SETS30/EX]
28	234A6-82251		SUSPENSION	ｻｽﾍﾟﾝｼｮﾝ	1	[EX][SUS001][SETS30/EX]
29	234A6-82261		RAIL,SLIDE A	ﾚｰﾙ	1	[EX][SUS001][SETS30/EX]
30	234A6-82271		RAIL,SLIDE C	ﾚｰﾙ	1	[EX][SUS001][SETS30/EX]
31	234A6-82281		CABLE	ｹｰﾌﾞﾙ	1	[EX][SUS001][SETS30/EX]
32	234A6-82291		WASHER	ﾜｯｼｬ	2	[EX][SUS001][SETS30/EX]
33	234A6-82301		BOLT	ﾎﾞﾙﾄ	4	[EX][SUS001][SETS30/EX]
34	534A5-32311		SPACER,SEAT	ｽﾍﾟｰｻ	1	[SETS30/EX]
35	01400-00008		NUT	ﾅｯﾄ	4	[EX][SUS001]
-	01400-00008		NUT	ﾅｯﾄ	8	[SETS30/EX]
36	02010-00008		WASHER	ﾜｯｼｬ	4	[EX][SUS001]
-	02010-00008		WASHER	ﾜｯｼｬ	8	[SETS30/EX]
37	02000-00008		WASHER	ﾜｯｼｬ	4	[SETS30/EX]

FIG.141 PUMP UNIT (G-TYPE)

(F5017110) ポンプユニット

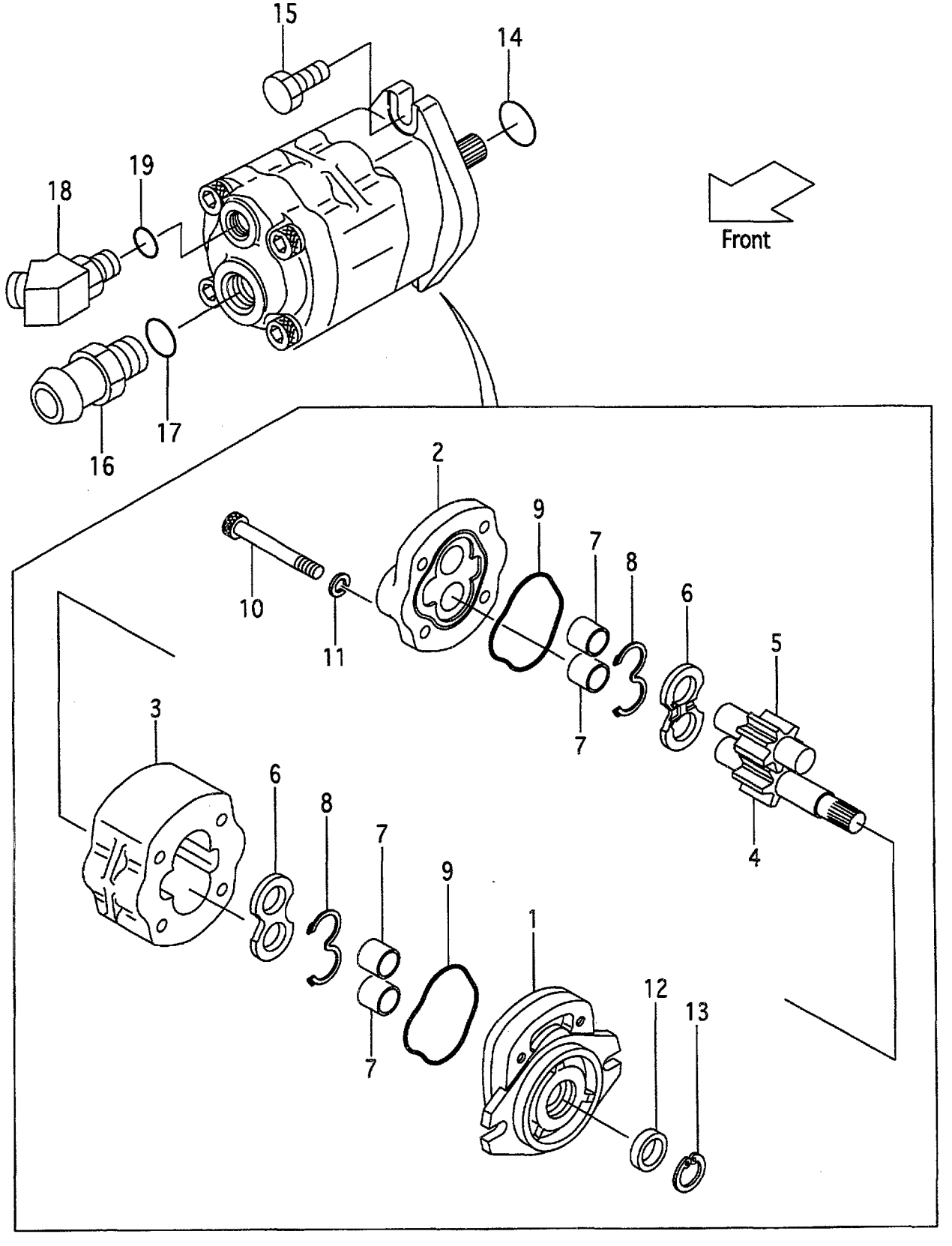

A:FG10C19 FG10T19 FG15C19 FG15T19 FG18C19 FG18T19

Item No	Part No.	Mark	Description		Req'd	Remarks : Serial No.
A1	110F7-10232		PUMP-ASSY,GEAR	ｷﾞﾔｰﾎﾟﾝﾌﾟｱｯｾﾝ	1	INC.1-13
1	NO PART NO.	#	COVER,FRONT	ｶﾊﾞｰ	1	
2	NO PART NO.	#	COVER,REAR	ｶﾊﾞｰ	1	
3	NO PART NO.	#	BODY	ﾎﾞﾃﾞｨ	1	
4	NO PART NO.	#	GEAR,DRIVE	ｷﾞﾔｰ	1	
5	NO PART NO.	#	GEAR,DRIVEN	ｷﾞﾔｰ	1	
6	NO PART NO.	#	PLATE,SIDE	ﾌﾟﾚｰﾄ	2	
7	NO PART NO.	#	BUSHING	ﾌﾞｯｼﾝｸﾞ	4	
8	NO PART NO.	#*	GASKET	ｶﾞｽｹｯﾄ	2	
9	NO PART NO.	#*	GASKET	ｶﾞｽｹｯﾄ	2	
10	R-022-24238-00		BOLT	ﾎﾞﾙﾄ	4	
11	R-402-00012-12		WASHER	ﾜｯｼｬ	4	
12	NO PART NO.	#*	SEAL,OIL	ｼｰﾙ	1	
13	NO PART NO.	#*	RING,SNAP	ｽﾅｯﾌﾟﾘﾝｸﾞ	1	
14	03340-00140		O-RING	Oﾘﾝｸﾞ	1	
15	01185-10030		BOLT	ﾎﾞﾙﾄ	2	
A2	225A7-62021		NIPPLE-ASSY	ﾆｯﾌﾟﾙｱｯｾﾝ	1	INC.16,17
16	NO PART NO.	#	NIPPLE	ﾆｯﾌﾟﾙ	1	
17	03320-00290		O-RING	Oﾘﾝｸﾞ	1	
A3	216M7-62101		ADAPTER-ASSY	ｱﾀﾞﾌﾟﾀｱｯｾﾝ	1	INC.18,19
18	NO PART NO.	#	ADAPTER	ｱﾀﾞﾌﾟﾀ	1	
19	03320-00180		O-RING	Oﾘﾝｸﾞ	1	
K1	110F7-12001		KIT,REPAIR	ﾘﾍﾟｱｷｯﾄ	1	INC.8,9,12,13

FIG.142 PUMP UNIT (D-TYPE)

(F5017120) ﾎﾟﾝﾌﾟﾕﾆｯﾄ

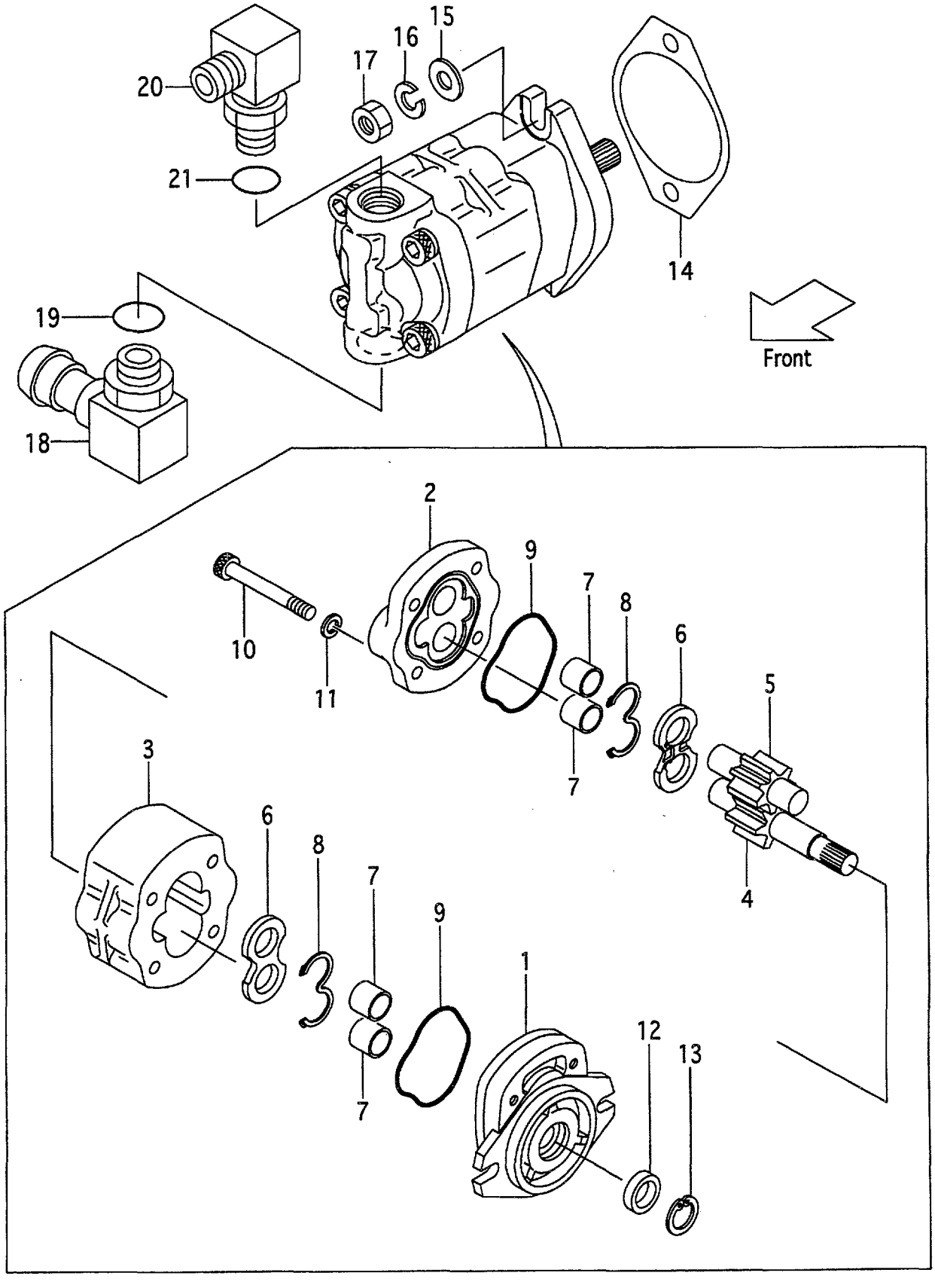

A:FD10C19 FD10T19 FD15C19 FD15T19 FD18C19 FD18T19

Item No	Part No.	Mark	Description		Req'd	Remarks : Serial No.
A1	110G7-10231		PUMP-ASSY,GEAR	ｷﾞﾔｰﾎﾟﾝﾌﾟｱｯｾﾝ	1	INC.1-13
1	NO PART NO.	#	COVER,FRONT	ｶﾊﾞｰ	1	
2	NO PART NO.	#	COVER,REAR	ｶﾊﾞｰ	1	
3	NO PART NO.	#	BODY	ﾎﾞﾃﾞｨ	1	
4	NO PART NO.	#	GEAR,DRIVE	ｷﾞﾔｰ	1	
5	NO PART NO.	#	GEAR,DRIVEN	ｷﾞﾔｰ	1	
6	NO PART NO.	#	PLATE,SIDE	ﾌﾟﾚｰﾄ	2	
7	NO PART NO.	#	BUSHING	ﾌﾞｯｼﾝｸﾞ	4	
8	NO PART NO.	#*	GASKET	ｶﾞｽｹｯﾄ	2	
9	NO PART NO.	#*	GASKET	ｶﾞｽｹｯﾄ	2	
10	R-022-24238-00		BOLT	ﾎﾞﾙﾄ	4	
11	R-402-00012-12		WASHER	ﾜｯｼｬ	4	
12	NO PART NO.	#*	SEAL,OIL	ｼｰﾙ	1	
13	NO PART NO.	#*	RING,SNAP	ｽﾅｯﾌﾟﾘﾝｸﾞ	1	
14	23657-12002		PACKING	ﾊﾟｯｷﾝｸﾞ	1	
15	02000-00010		WASHER	ﾜｯｼｬ	2	
16	02010-00010		WASHER	ﾜｯｼｬ	2	
17	01402-00010		NUT	ﾅｯﾄ	2	
A2	214L7-62261		ELBOW-ASSY	ｴﾙﾎﾞｱｯｾﾝ	1	INC.18,19
18	NO PART NO.	#	ELBOW	ｴﾙﾎﾞ	1	
19	03320-00290		O-RING	Oﾘﾝｸﾞ	1	
A3	04150-20404		ELBOW-ASSY	ｴﾙﾎﾞｱｯｾﾝ	1	INC.20,21
20	NO PART NO.	#	ELBOW	ｴﾙﾎﾞ	1	
21	03320-00180		O-RING	Oﾘﾝｸﾞ	1	
K1	110F7-12001		KIT,REPAIR	ﾘﾍﾟｱｷｯﾄ	1	INC.8,9,12,13

FIG.143 CONTROL VALVE [2SV]

(F5017310) コントロールバルブ

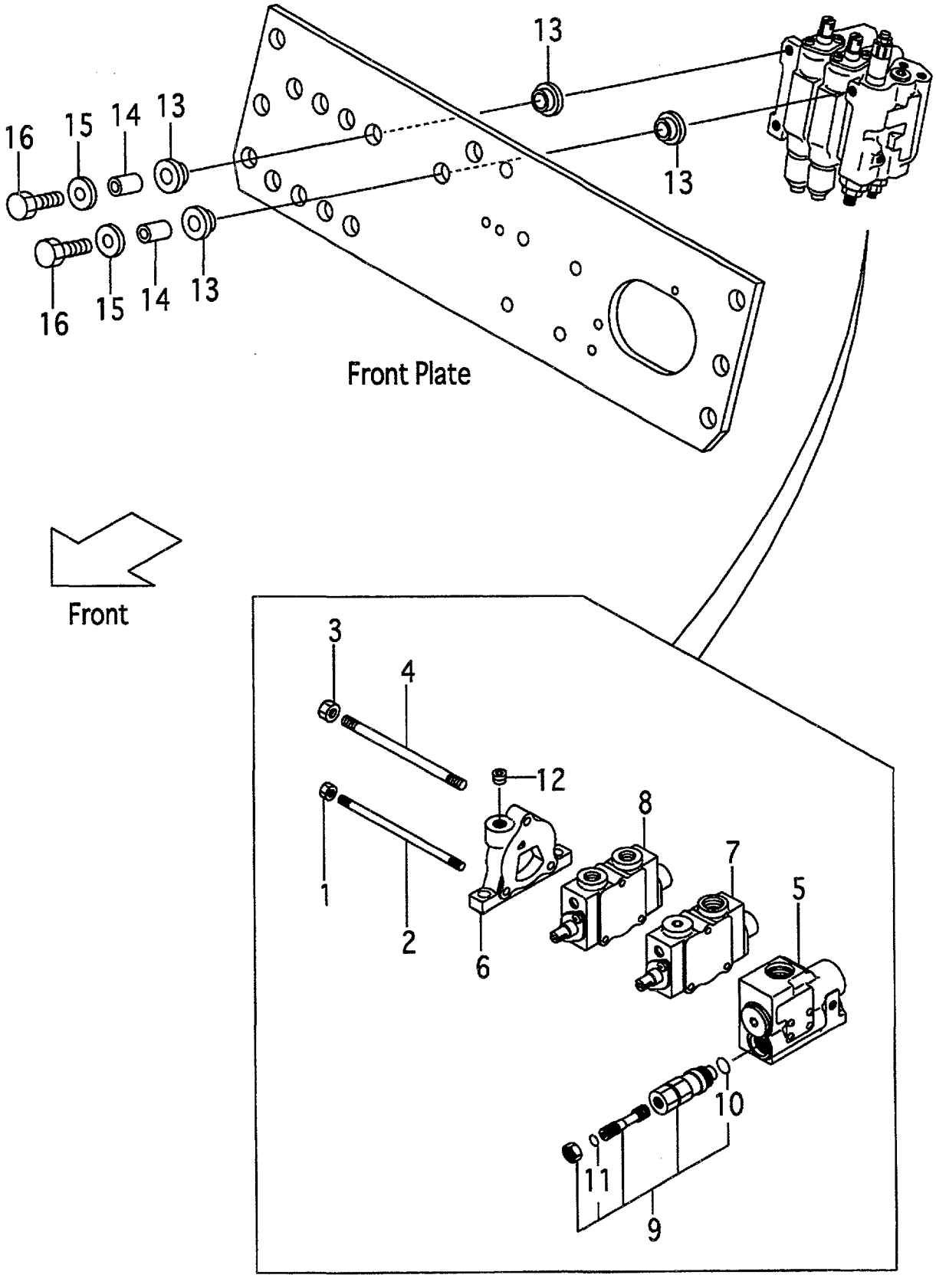

A:FG10C19 FG10T19 FG15C19 FG15T19 FG18C19 FG18T19
B:FD10C19 FD10T19 FD15C19 FD15T19 FD18C19 FD18T19

Item No	Part No.	Mark	Description		Req'd	Remarks : Serial No.
A1	216G7-30221		VALVE-ASSY,CONTROL	ｺﾝﾄﾛｰﾙﾊﾞﾙﾌﾞｱｯｾﾝ	1	INC.1-12
-	516G4-60202		VALVE-ASSY,CONTROL	ｺﾝﾄﾛｰﾙﾊﾞﾙﾌﾞｱｯｾﾝ	1	[VLS] INC.1-12
1	B-93118-08652		NUT	ﾅｯﾄ	2	
2	B-21011-31106		ROD,TIE	ﾛｯﾄﾞ	2	
3	B-93128-10082		NUT	ﾅｯﾄ	1	
4	B-21011-31105		ROD,TIE	ﾛｯﾄﾞ	1	
5	B-21013-37356		SECTION,INLET	ｾｸｼｮﾝ	1	SEE FIG.147
-	B-21013-37348		SECTION,INLET	ｾｸｼｮﾝ	1	[VLS]SEE FIG.147
6	B-21011-30137		SECTION,OUTLET	ｾｸｼｮﾝ	1	
7	B-21013-36432		SECTION,SPOOL	ｾｸｼｮﾝ	1	(LIFT)SEE FIG.148
8	B-21013-36433		SECTION,SPOOL	ｾｸｼｮﾝ	1	(TILT)SEE FIG.149
9	63130-25614		VALVE,MAIN-RELIEF	ﾊﾞﾙﾌﾞ	1	INC.10,11
10	NO PART NO.	#*	O-RING	Oﾘﾝｸﾞ	1	
11	NO PART NO.	#*	O-RING	Oﾘﾝｸﾞ	1	
12	B-97123-02111		PLUG	ﾌﾟﾗｸﾞ	1	
13	216G7-32001		RUBBER,VALVE	ﾗﾊﾞｰ	6	
14	216G7-32011		COLLAR	ｶﾗｰ	3	
15	216G7-32021		WASHER,PLANE	ﾜｯｼｬ	3	
16	216G7-32041		BOLT	ﾎﾞﾙﾄ	3	
K1	B-21003-30086		KIT,SEAL	ｼｰﾙｷｯﾄ	1	INC.10,11

FIG.144 CONTROL VALVE [3SV]

(F5017320) コントロールバルブ

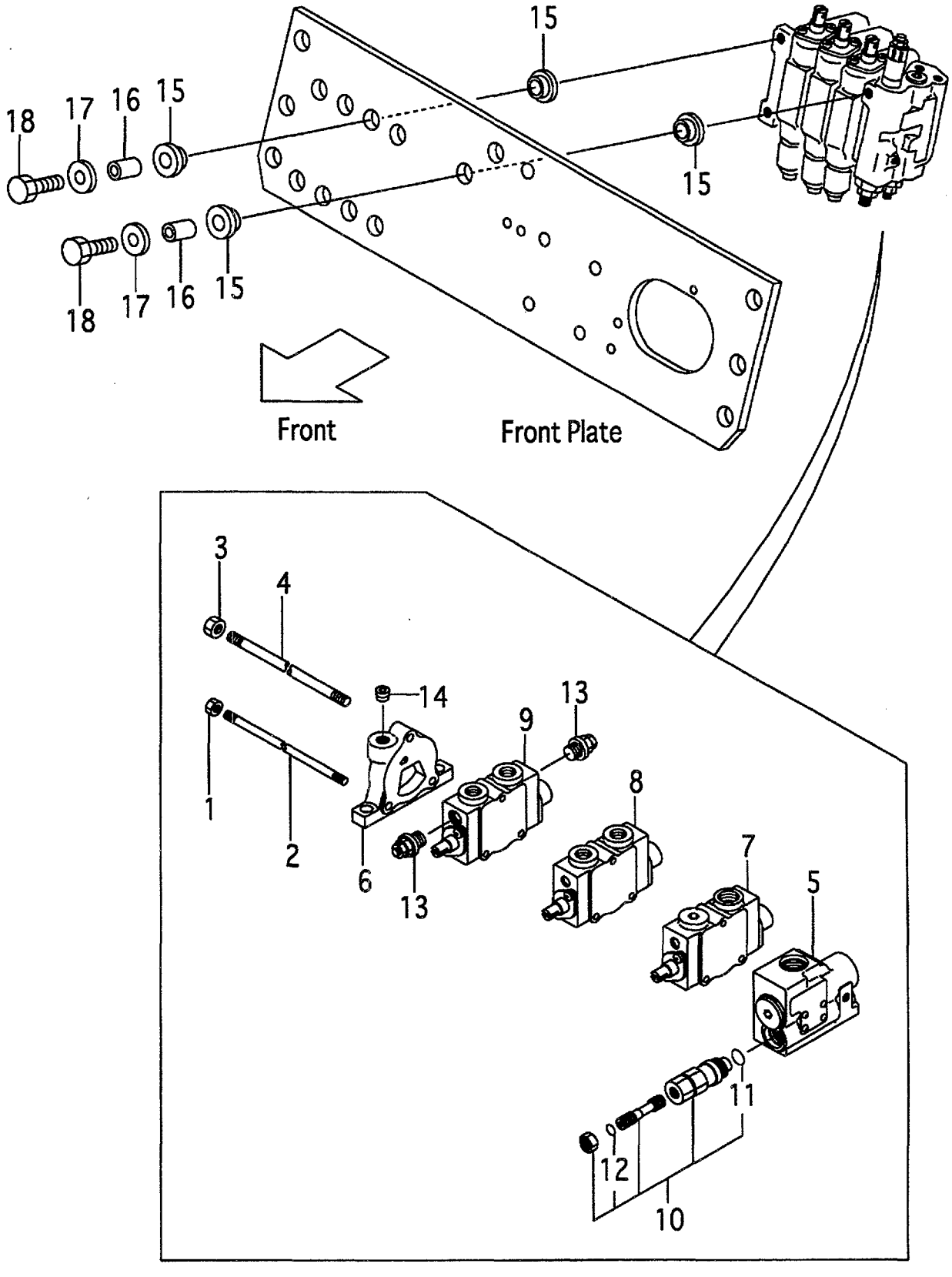

A:FG10C19 FG10T19 FG15C19 FG15T19 FG18C19 FG18T19
B:FD10C19 FD10T19 FD15C19 FD15T19 FD18C19 FD18T19

Item No	Part No.	Mark	Description		Req'd	Remarks : Serial No.
A1	216G7-30321		VALVE-ASSY,CONTROL	ｺﾝﾄﾛｰﾙﾊﾞﾙﾌﾞｱｯｾﾝ	1	[3SV] INC.1-14
-	516G4-60302		VALVE-ASSY,CONTROL	ｺﾝﾄﾛｰﾙﾊﾞﾙﾌﾞｱｯｾﾝ	1	[3SV/VLS] INC.1-12,14
1	B-93118-08652		NUT	ﾅｯﾄ	2	[3SV]
2	B-21021-30104		ROD,TIE	ﾛｯﾄﾞ	2	[3SV]
3	B-93128-10082		NUT	ﾅｯﾄ	1	[3SV]
4	B-21021-30103		ROD,TIE	ﾛｯﾄﾞ	1	[3SV]
5	B-21013-37356		SECTION,INLET	ｾｸｼｮﾝ	1	[3SV]SEE FIG.147
-	B-21013-37348		SECTION,INLET	ｾｸｼｮﾝ	1	[3SV/VLS]SEE FIG.147
6	B-21011-30137		SECTION,OUTLET	ｾｸｼｮﾝ	1	[3SV]
7	B-21013-36432		SECTION,SPOOL	ｾｸｼｮﾝ	1	[3SV](LIFT)SEE FIG.148
8	B-21013-36433		SECTION,SPOOL	ｾｸｼｮﾝ	1	[3SV](TILT)SEE FIG.149
9	B-21013-39701		SECTION,SPOOL	ｾｸｼｮﾝ	1	[3SV](3RD)SEE FIG.150
-	B-21013-36434		SECTION,SPOOL	ｾｸｼｮﾝ	1	[3SV/VLS](3RD)SEE FIG.150
10	63130-25614		VALVE,MAIN-RELIEF	ﾊﾞﾙﾌﾞ	1	[3SV] INC.11,12
11	NO PART NO.	**	O-RING	Oﾘﾝｸﾞ	1	[3SV]
12	NO PART NO.	**	O-RING	Oﾘﾝｸﾞ	1	[3SV]
13	B-C0003-30301		VALVE,SHUT-OFF	ﾊﾞﾙﾌﾞ	2	[3SV](WITHOUT 3SV/VLS)
14	B-97123-02111		PLUG	ﾌﾟﾗｸﾞ	1	[3SV]
15	216G7-32001		RUBBER,VALVE	ﾗﾊﾞｰ	6	[3SV]
16	216G7-32011		COLLAR	ｶﾗｰ	3	[3SV]
17	216G7-32021		WASHER,PLANE	ﾜｯｼｬ	3	[3SV]
18	216G7-32041		BOLT	ﾎﾞﾙﾄ	3	[3SV]
K1	B-21003-30086		KIT,SEAL	ｼｰﾙｷｯﾄ	1	[3SV] INC.11,12

FIG.145 CONTROL VALVE [4SV]

(F5017330) ｺﾝﾄﾛｰﾙﾊﾞﾙﾌﾞ

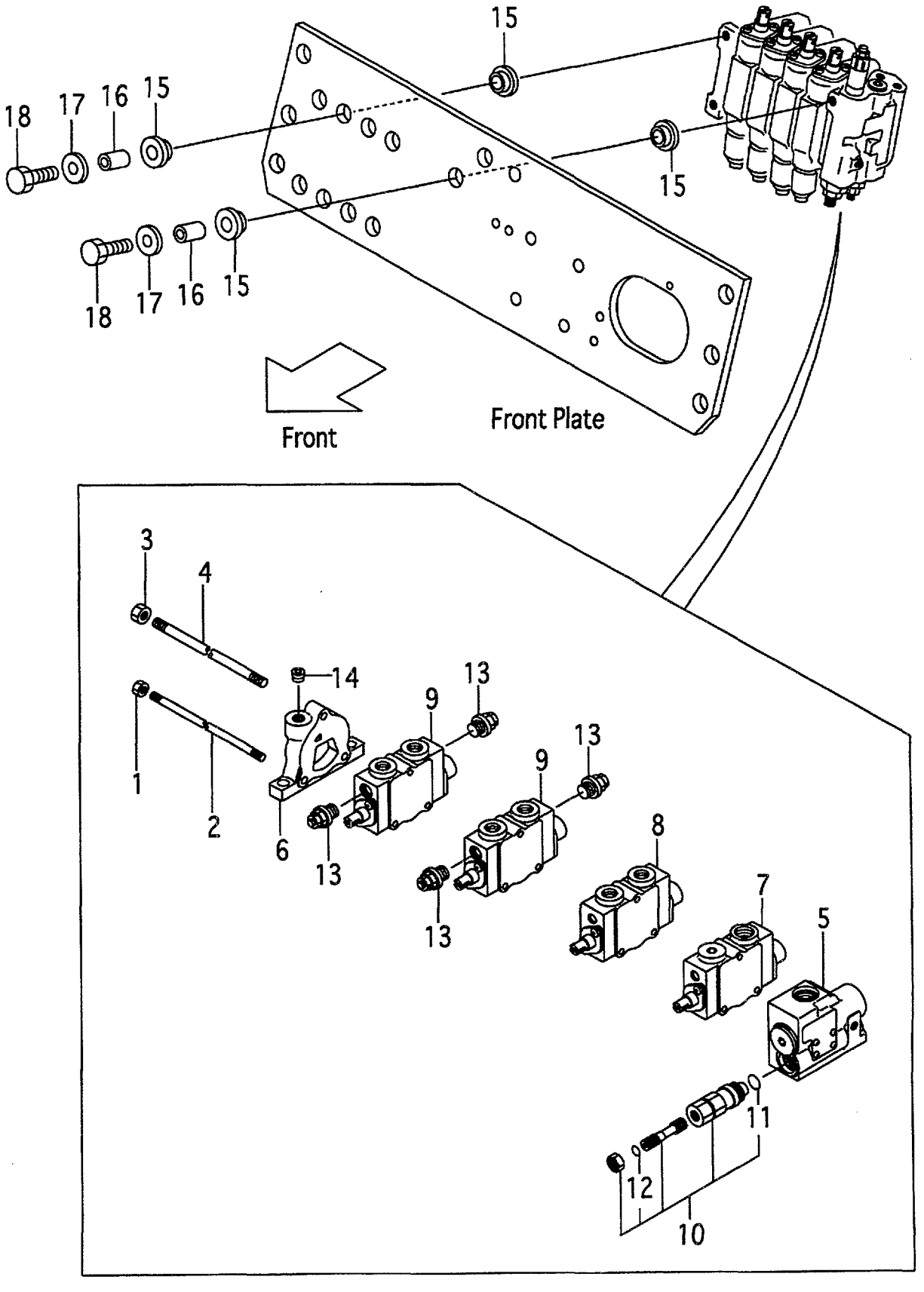

A:FG10C19 FG10T19 FG15C19 FG15T19 FG18C19 FG18T19
B:FD10C19 FD10T19 FD15C19 FD15T19 FD18C19 FD18T19

Item No	Part No.	Mark	Description		Req'd	Remarks : Serial No.
A1	216G7-30421		VALVE-ASSY,CONTROL	ｺﾝﾄﾛｰﾙﾊﾞﾙﾌﾞｱｯｾﾝ	1	[4SV] INC.1-14
-	516G4-60402		VALVE-ASSY,CONTROL	ｺﾝﾄﾛｰﾙﾊﾞﾙﾌﾞｱｯｾﾝ	1	[4SV/VLS] INC.1-12,14
1	B-93118-08652		NUT	ﾅｯﾄ	2	[4SV]
2	B-21031-30104		ROD,TIE	ﾛｯﾄﾞ	2	[4SV]
3	B-93128-10082		NUT	ﾅｯﾄ	1	[4SV]
4	B-21031-30103		ROD,TIE	ﾛｯﾄﾞ	1	[4SV]
5	B-21013-37356		SECTION,INLET	ｾｸｼｮﾝ	1	[4SV]SEE FIG.147
-	B-21013-37348		SECTION,INLET	ｾｸｼｮﾝ	1	[4SV/VLS]SEE FIG.147
6	B-21011-30137		SECTION,OUTLET	ｾｸｼｮﾝ	1	[4SV]
7	B-21013-36432		SECTION,SPOOL	ｾｸｼｮﾝ	1	[4SV](LIFT)SEE FIG.148
8	B-21013-36433		SECTION,SPOOL	ｾｸｼｮﾝ	1	[4SV](TILT)SEE FIG.149
9	B-21013-39701		SECTION,SPOOL	ｾｸｼｮﾝ	2	[4SV](3RD,4TH)SEE FIG.150
-	B-21013-36434		SECTION,SPOOL	ｾｸｼｮﾝ	2	[4SV/VLS](3RD,4TH) SEE FIG.150
10	63130-25614		VALVE,MAIN-RELIEF	ﾊﾞﾙﾌﾞ	1	[4SV] INC.11,12
11	NO PART NO.	#*	O-RING	Oﾘﾝｸﾞ	1	[4SV]
12	NO PART NO.	#*	O-RING	Oﾘﾝｸﾞ	1	[4SV]
13	B-C0003-30301		VALVE,SHUT-OFF	ﾊﾞﾙﾌﾞ	4	[4SV](WITHOUT 4SV/VLS)
14	B-97123-02111		PLUG	ﾌﾟﾗｸﾞ	1	[4SV]
15	216G7-32001		RUBBER,VALVE	ﾗﾊﾞｰ	6	[4SV]
16	216G7-32011		COLLAR	ｶﾗｰ	3	[4SV]
17	216G7-32021		WASHER,PLANE	ﾜｯｼｬ	3	[4SV]
18	216G7-32041		BOLT	ﾎﾞﾙﾄ	3	[4SV]
K1	B-21003-30086		KIT,SEAL	ｼｰﾙｷｯﾄ	1	[4SV] INC.11,12

FIG.146 CONTROL VALVE [5SV]

(F5017340) コントロールバルブ

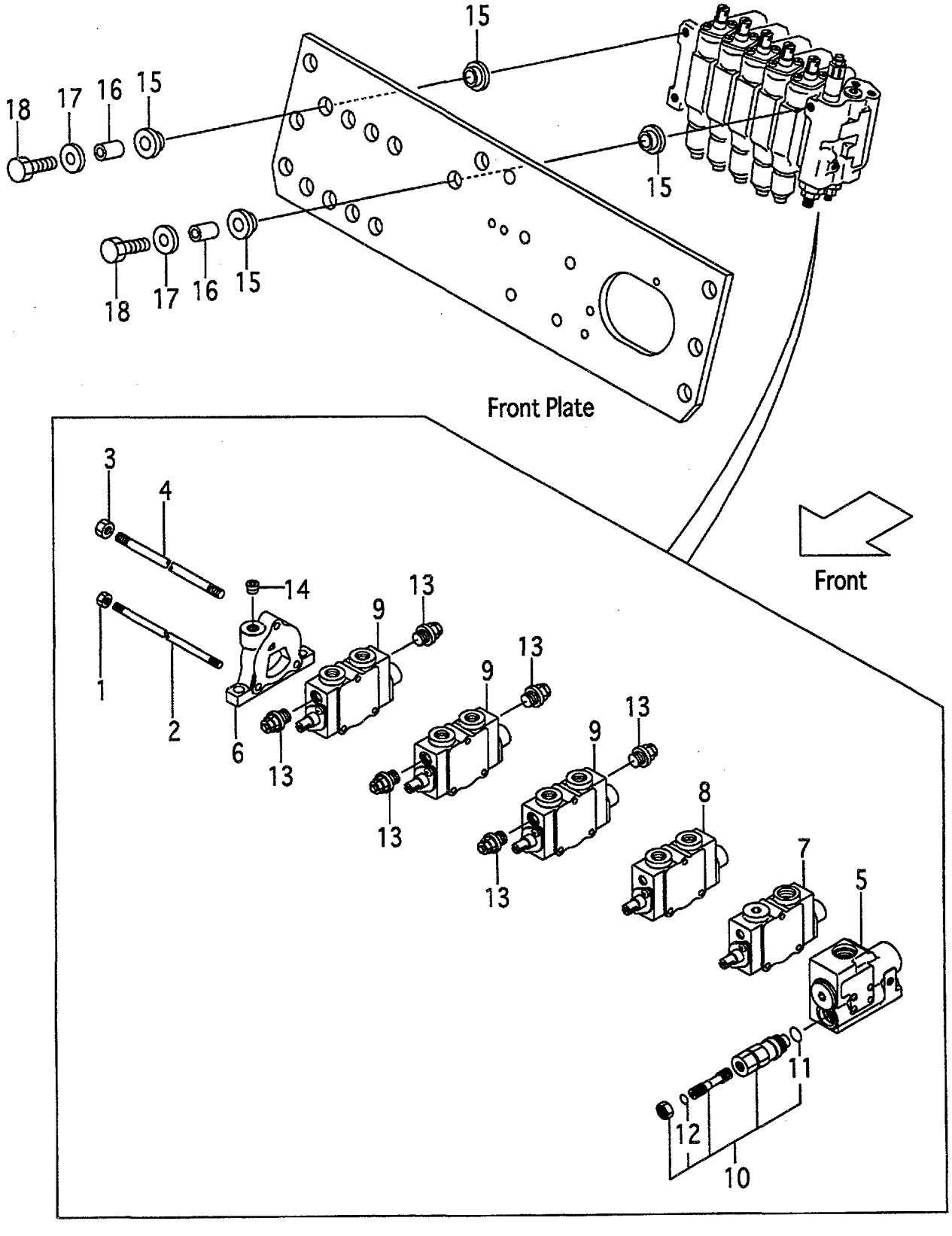

A:FG10C19 FG10T19 FG15C19 FG15T19 FG18C19 FG18T19
B:FD10C19 FD10T19 FD15C19 FD15T19 FD18C19 FD18T19

Item No	Part No.	Mark	Description		Req'd	Remarks : Serial No.
A1	218G7-30521		VALVE-ASSY,CONTROL	ｺﾝﾄﾛｰﾙﾊﾞﾙﾌﾞｱｯｾﾝ	1	[5SV] INC.1-14
-	518G4-60501		VALVE-ASSY,CONTROL	ｺﾝﾄﾛｰﾙﾊﾞﾙﾌﾞｱｯｾﾝ	1	[5SV/VLS] INC.1-12,14
1	B-93118-08652		NUT	ﾅｯﾄ	2	[5SV]
2	B-21041-30104		ROD,TIE	ﾛｯﾄﾞ	2	[5SV]
3	B-93128-10082		NUT	ﾅｯﾄ	1	[5SV]
4	B-21041-30103		ROD,TIE	ﾛｯﾄﾞ	1	[5SV]
5	B-21013-37356		SECTION,INLET	ｾｸｼｮﾝ	1	[5SV]SEE FIG.147
-	B-21013-37348		SECTION,INLET	ｾｸｼｮﾝ	1	[5SV/VLS]SEE FIG.147
6	B-21011-30137		SECTION,OUTLET	ｾｸｼｮﾝ	1	[5SV]
7	B-21013-36432		SECTION,SPOOL	ｾｸｼｮﾝ	1	[5SV](LIFT)SEE FIG.148
8	B-21013-36433		SECTION,SPOOL	ｾｸｼｮﾝ	1	[5SV](TILT)SEE FIG.149
9	B-21013-39701		SECTION,SPOOL	ｾｸｼｮﾝ	3	[5SV](3RD,4TH,5TH) SEE FIG.150
-	B-21013-36434		SECTION,SPOOL	ｾｸｼｮﾝ	3	[5SV/VLS](3RD,4TH,5TH) SEE FIG.150
10	63130-25614		VALVE,MAIN-RELIEF	ﾊﾞﾙﾌﾞ	1	[5SV] INC.11,12
11	NO PART NO.	**	O-RING	Oﾘﾝｸﾞ	1	[5SV]
12	NO PART NO.	**	O-RING	Oﾘﾝｸﾞ	1	[5SV]
13	B-C0003-30301		VALVE,SHUT-OFF	ﾊﾞﾙﾌﾞ	6	[5SV](WITHOUT 5SV/VLS)
14	B-97123-02111		PLUG	ﾌﾟﾗｸﾞ	1	[5SV]
15	216G7-32001		RUBBER,VALVE	ﾗﾊﾞｰ	6	[5SV]
16	216G7-32011		COLLAR	ｶﾗｰ	3	[5SV]
17	216G7-32021		WASHER,PLANE	ﾜｯｼｬ	3	[5SV]
18	216G7-32041		BOLT	ﾎﾞﾙﾄ	3	[5SV]
K1	B-21003-30086		KIT,SEAL	ｼｰﾙｷｯﾄ	1	[5SV] INC.11,12

FIG.147 INLET SECTION
(F5017350) インレットセクション

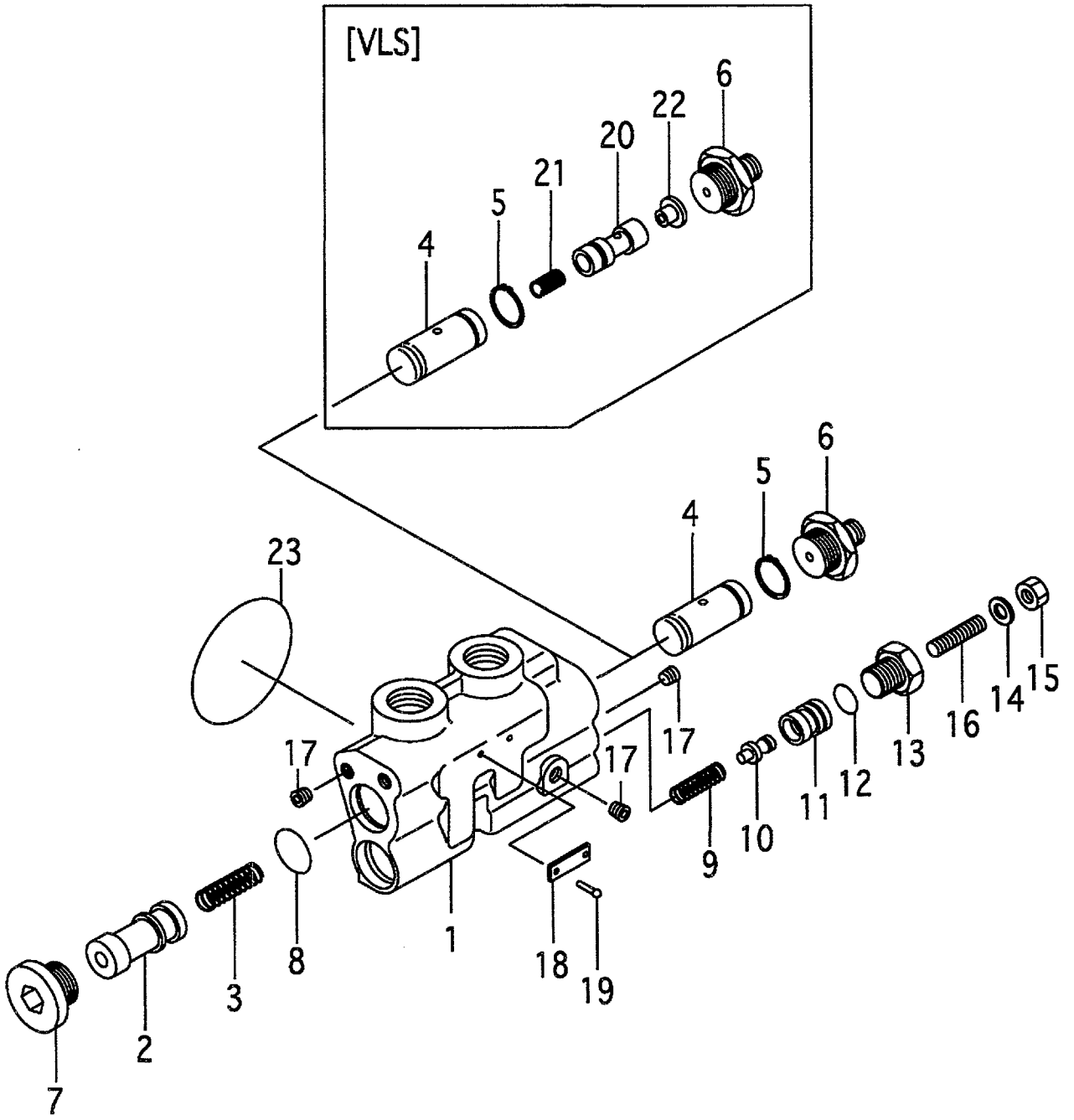

A:FG10C19 FG10T19 FG15C19 FG15T19 FG18C19 FG18T19
B:FD10C19 FD10T19 FD15C19 FD15T19 FD18C19 FD18T19

Item No	Part No.	Mark	Description		Req'd	Remarks : Serial No.
A1	B-21013-37356		SECTION-ASSY,INLET	ｲﾝﾚｯﾄｾｸｼｮﾝｱｯｾﾝ	1	INC.1-19,23
-	B-21013-37348		SECTION-ASSY,INLET	ｲﾝﾚｯﾄｾｸｼｮﾝｱｯｾﾝ	1	[VLS] INC.1-23
1	NO PART NO.	#	HOUSING,INLET	ﾊｳｼﾞﾝｸ	1	
2	NO PART NO.	#	SPOOL	ｽﾌﾟｰﾙ	1	
3	B-21731-30802		SPRING	ｽﾌﾟﾘﾝｸﾞ	1	
4	NO PART NO.	#	SLEEVE	ｽﾘｰﾌﾞ	1	
-	NO PART NO.	#	SLEEVE	ｽﾘｰﾌﾞ	1	[VLS]
5	B-21001-01452		RING,SNAP	ｽﾅｯﾌﾟﾘﾝｸﾞ	1	
6	B-21733-40207		CONNECTOR	ｺﾈｸﾀ	1	
7	B-21731-30613		PLUG	ﾌﾟﾗｸﾞ	1	
8	B-95113-02400		O-RING	Oﾘﾝｸﾞ	1	
9	B-21731-30306		SPRING	ｽﾌﾟﾘﾝｸﾞ	1	
10	B-21731-30502		POPPET	ﾎﾟﾍﾟｯﾄ	1	
11	B-21731-30703		HOUSING	ﾊｳｼﾞﾝｸﾞ	1	
-	B-21731-30704		HOUSING	ﾊｳｼﾞﾝｸﾞ	1	[VLS]
12	B-95111-01200		O-RING	Oﾘﾝｸﾞ	1	
13	B-21731-30612		PLUG	ﾌﾟﾗｸﾞ	1	
14	B-94101-08201		WASHER	ﾜｯｼｬ	1	
15	B-93364-08052		NUT	ﾅｯﾄ	1	
16	B-91511-08351		SCREW	ｽｸﾘｭ	1	
-	B-91511-08301		SCREW	ｽｸﾘｭ	1	[VLS]
17	B-97123-01111		PLUG	ﾌﾟﾗｸﾞ	4	
18	NO PART NO.	#	PLATE,NAME	ﾌﾟﾚｰﾄ	1	
19	NO PART NO.	#	SCREW	ｽｸﾘｭ	2	
20	NO PART NO.	#	PISTON	ﾋﾟｽﾄﾝ	1	[VLS]
21	B-21731-30308		SPRING	ｽﾌﾟﾘﾝｸﾞ	1	[VLS]
22	B-21731-31201		DAMPER	ﾀﾞﾝﾊﾟ	1	[VLS]
23	B-21001-00106		O-RING	Oﾘﾝｸﾞ	1	

FIG.148 SPOOL SECTION (LIFT)

(F5017360) スプールセクション

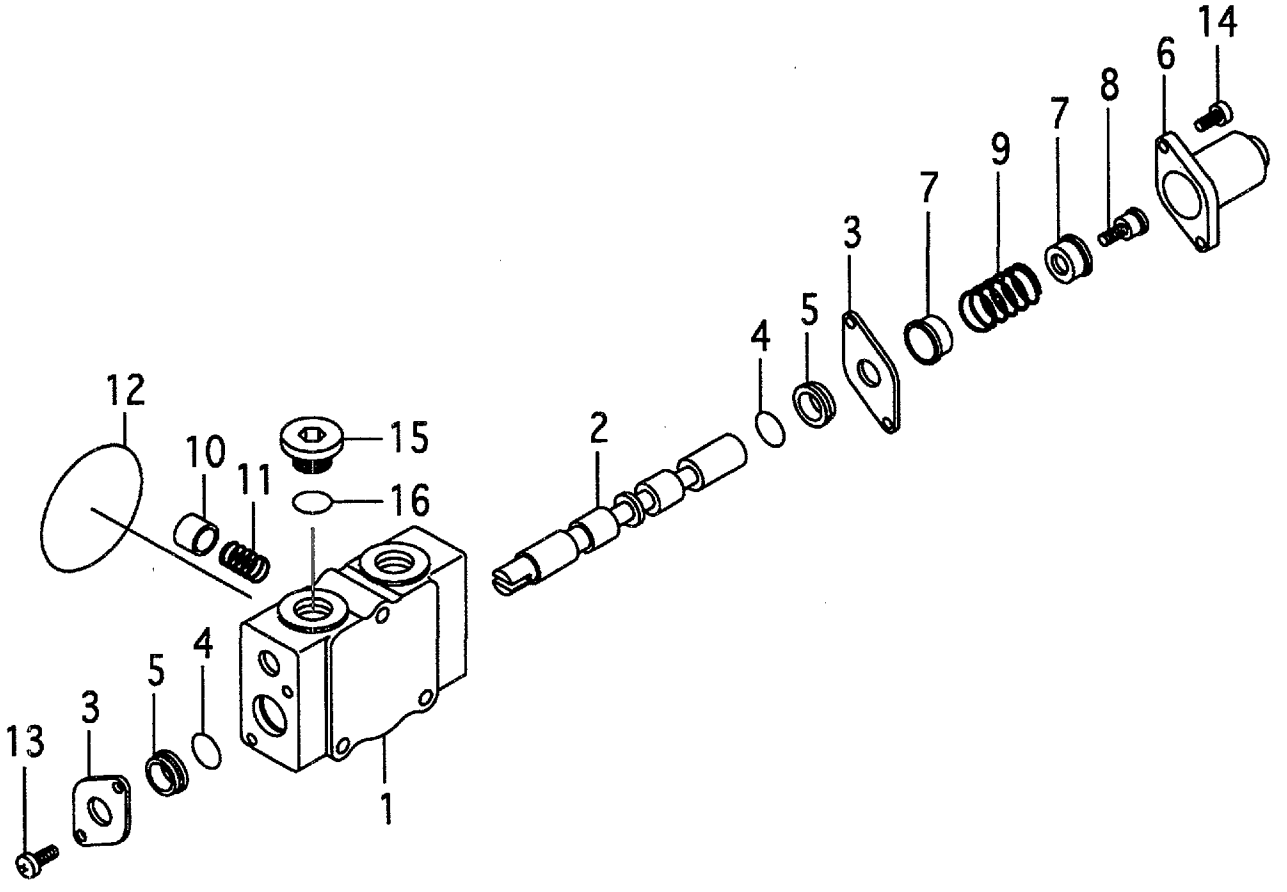

A:FG10C19 FG10T19 FG15C19 FG15T19 FG18C19 FG18T19
B:FD10C19 FD10T19 FD15C19 FD15T19 FD18C19 FD18T19

Item No	Part No.	Mark	Description		Req'd	Remarks : Serial No.
A1	B-21013-36432		SECTION-ASSY,SPOOL	ｽﾌﾟｰﾙｾｸｼｮﾝｱｯｾﾝ	1	INC.1-16
1	NO PART NO.	#	HOUSING,VALVE	ﾊｳｼﾞﾝｸ	1	
2	NO PART NO.	#	SPOOL	ｽﾌﾟｰﾙ	1	
3	B-21011-31702		PLATE	ﾌﾟﾚｰﾄ	2	
4	B-21001-00689		O-RING	Oﾘﾝｸﾞ	2	
5	B-21011-32801		WIPER	ﾜｲﾊﾟ	2	
6	B-21011-31011		CAP	ｷｬｯﾌﾟ	1	
7	B-21011-30702		SEAT	ｼｰﾄ	2	
8	B-21011-30507		SCREW	ｽｸﾘｭ	1	
9	B-21011-30603		SPRING	ｽﾌﾟﾘﾝｸﾞ	1	
10	B-21011-32404		POPPET	ﾎﾟﾍﾟｯﾄ	1	
11	B-21011-30604		SPRING	ｽﾌﾟﾘﾝｸﾞ	1	
12	B-21001-00106		O-RING	Oﾘﾝｸﾞ	1	
13	B-91111-60102		SCREW	ｽｸﾘｭ	2	
14	B-92703-06181		BOLT	ﾎﾞﾙﾄ	2	
15	B-21001-90408		PLUG	ﾌﾟﾗｸﾞ	1	
16	B-95113-01800		O-RING	Oﾘﾝｸﾞ	1	

FIG.149 SPOOL SECTION (TILT)

(F5017370) スプールセクション

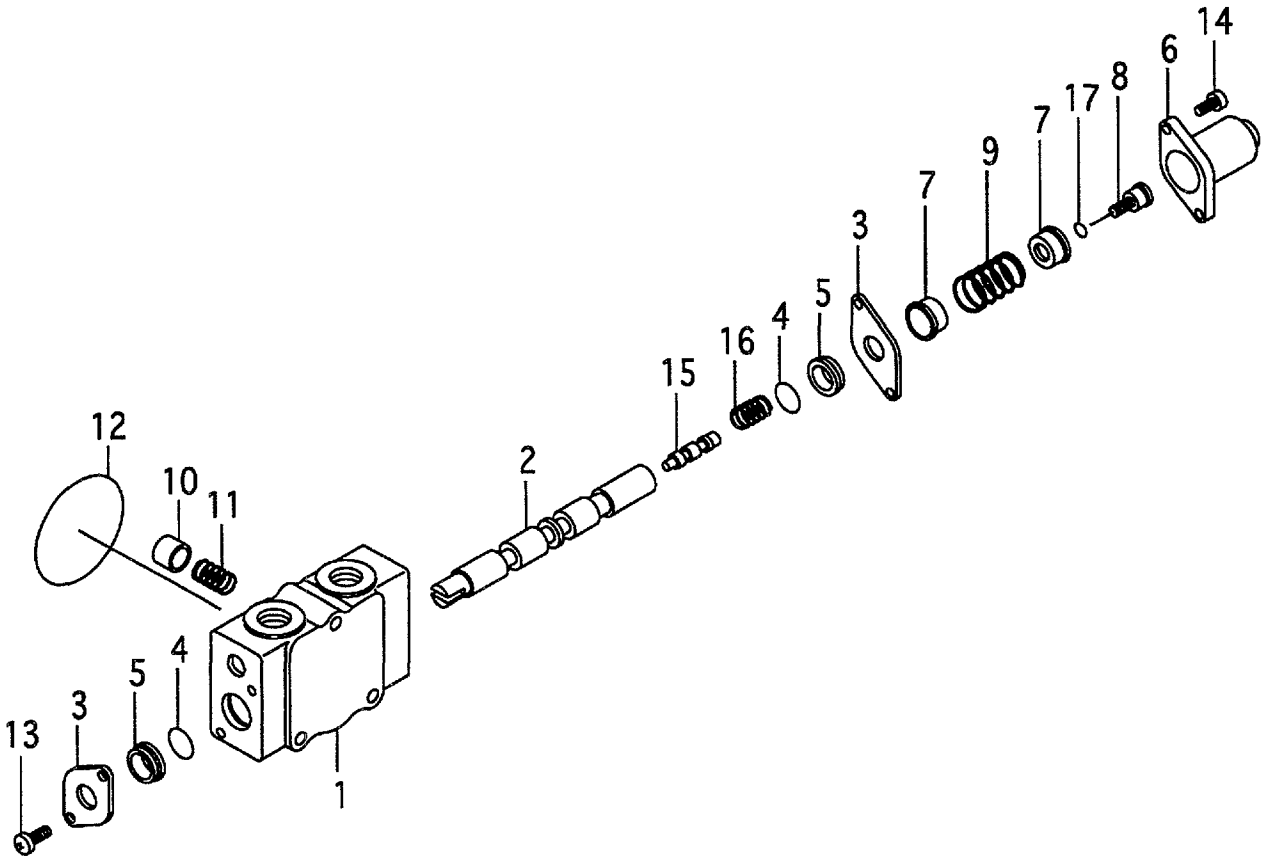

A:FG10C19 FG10T19 FG15C19 FG15T19 FG18C19 FG18T19
B:FD10C19 FD10T19 FD15C19 FD15T19 FD18C19 FD18T19

Item No	Part No.	Mark	Description		Req'd	Remarks : Serial No.
A1	B-21013-36433		SECTION-ASSY,SPOOL	ｽﾌﾟｰﾙｾｸｼｮﾝｱｯｾﾝ	1	INC.1-17
1	NO PART NO.	#	HOUSING,VALVE	ﾊｳｼﾞﾝｸ	1	
2	NO PART NO.	#	SPOOL	ｽﾌﾟｰﾙ	1	
3	B-21011-31702		PLATE	ﾌﾟﾚｰﾄ	2	
4	B-21001-00689		O-RING	Oﾘﾝｸﾞ	2	
5	B-21011-32801		WIPER	ﾜｲﾊﾟ	2	
6	B-21011-31011		CAP	ｷｬｯﾌﾟ	1	
7	B-21011-30702		SEAT	ｼｰﾄ	2	
8	B-21011-30528		SCREW	ｽｸﾘｭ	1	
9	B-21011-30603		SPRING	ｽﾌﾟﾘﾝｸﾞ	1	
10	B-21011-32404		POPPET	ﾎﾟﾍﾟｯﾄ	1	
11	B-21011-30604		SPRING	ｽﾌﾟﾘﾝｸﾞ	1	
12	B-21001-00106		O-RING	Oﾘﾝｸﾞ	1	
13	B-91111-60102		SCREW	ｽｸﾘｭ	2	
14	B-92703-06181		BOLT	ﾎﾞﾙﾄ	2	
15	NO PART NO.	#	VALVE	ﾊﾞﾙﾌﾞ	1	
16	B-21011-30618		SPRING	ｽﾌﾟﾘﾝｸﾞ	1	
17	B-95133-00500		O-RING	Oﾘﾝｸﾞ	1	

FIG.150 SPOOL SECTION [3SV][4SV][5SV]

(F5017380) スプールセクション

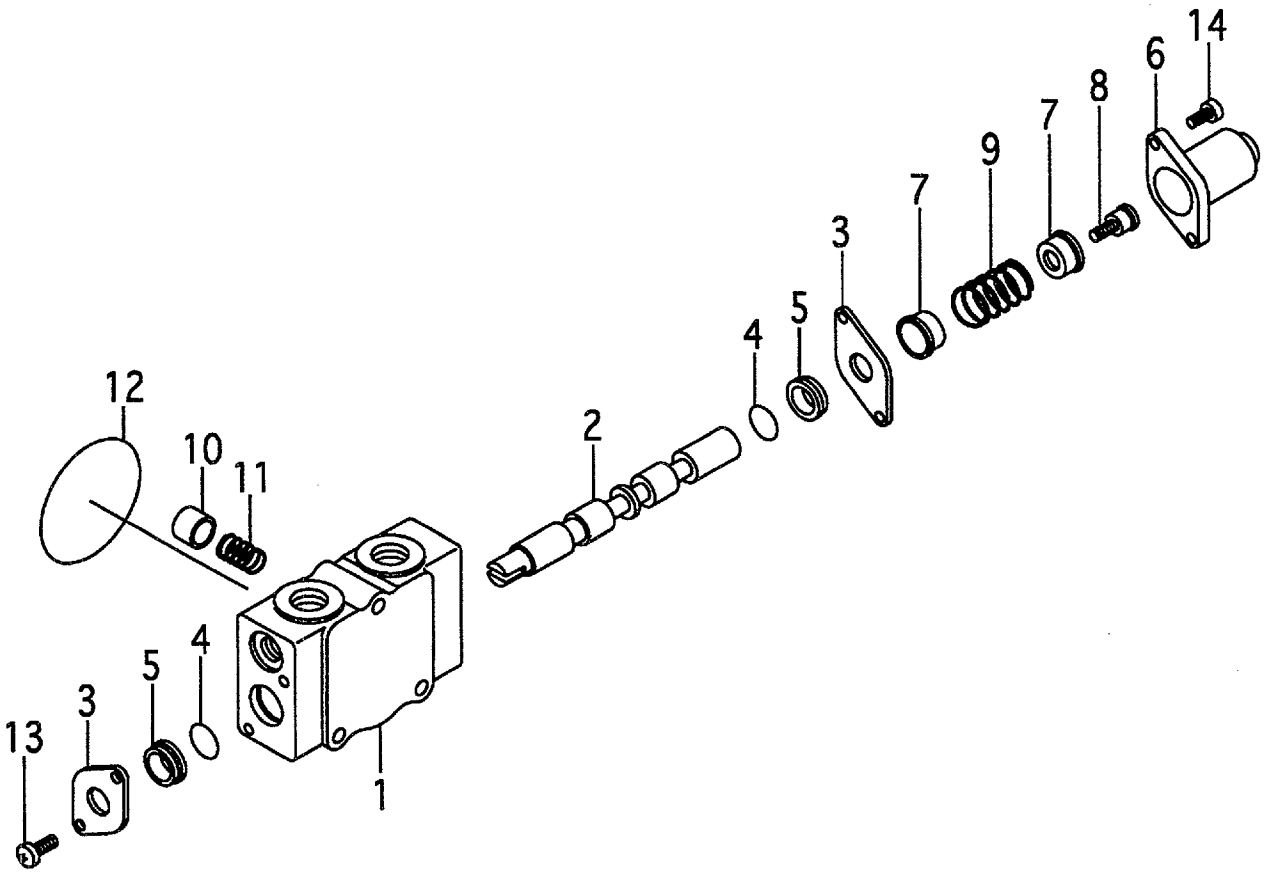

A:FG10C19 FG10T19 FG15C19 FG15T19 FG18C19 FG18T19
B:FD10C19 FD10T19 FD15C19 FD15T19 FD18C19 FD18T19

Item No	Part No.	Mark	Description		Req'd	Remarks : Serial No.
A1	B-21013-39701		SECTION-ASSY,SPOOL	ｽﾌﾟｰﾙｾｸｼｮﾝｱｯｾﾝ	1	[3SV] INC.1-14
-	B-21013-39701		SECTION-ASSY,SPOOL	ｽﾌﾟｰﾙｾｸｼｮﾝｱｯｾﾝ	2	[4SV] INC.1-14
-	B-21013-39701		SECTION-ASSY,SPOOL	ｽﾌﾟｰﾙｾｸｼｮﾝｱｯｾﾝ	3	[5SV] INC.1-14
-	B-21013-36434		SECTION-ASSY,SPOOL	ｽﾌﾟｰﾙｾｸｼｮﾝｱｯｾﾝ	1	[3SV/VLS] INC.1-14
-	B-21013-36434		SECTION-ASSY,SPOOL	ｽﾌﾟｰﾙｾｸｼｮﾝｱｯｾﾝ	2	[4SV/VLS] INC.1-14
-	B-21013-36434		SECTION-ASSY,SPOOL	ｽﾌﾟｰﾙｾｸｼｮﾝｱｯｾﾝ	3	[5SV/VLS] INC.1-14
1	NO PART NO.	#	HOUSING,VALVE	ﾊｳｼﾞﾝｸ	1	[3SV]
-	NO PART NO.	#	HOUSING,VALVE	ﾊｳｼﾞﾝｸ	2	[4SV]
-	NO PART NO.	#	HOUSING,VALVE	ﾊｳｼﾞﾝｸ	3	[5SV]
2	NO PART NO.	#	SPOOL	ｽﾌﾟｰﾙ	1	[3SV]
-	NO PART NO.	#	SPOOL	ｽﾌﾟｰﾙ	2	[4SV]
-	NO PART NO.	#	SPOOL	ｽﾌﾟｰﾙ	3	[5SV]
3	B-21011-31702		PLATE	ﾌﾟﾚｰﾄ	2	[3SV]
-	B-21011-31702		PLATE	ﾌﾟﾚｰﾄ	4	[4SV]
-	B-21011-31702		PLATE	ﾌﾟﾚｰﾄ	6	[5SV]
4	B-21001-00689		O-RING	Oﾘﾝｸﾞ	2	[3SV]
-	B-21001-00689		O-RING	Oﾘﾝｸﾞ	4	[4SV]
-	B-21001-00689		O-RING	Oﾘﾝｸﾞ	6	[5SV]
5	B-21011-32801		WIPER	ﾜｲﾊﾟ	2	[3SV]
-	B-21011-32801		WIPER	ﾜｲﾊﾟ	4	[4SV]
-	B-21011-32801		WIPER	ﾜｲﾊﾟ	6	[5SV]
6	B-21011-31011		CAP	ｷｬｯﾌﾟ	1	[3SV]
-	B-21011-31011		CAP	ｷｬｯﾌﾟ	2	[4SV]
-	B-21011-31011		CAP	ｷｬｯﾌﾟ	3	[5SV]
7	B-21011-30702		SEAT	ｼｰﾄ	2	[3SV]
-	B-21011-30702		SEAT	ｼｰﾄ	4	[4SV]
-	B-21011-30702		SEAT	ｼｰﾄ	6	[5SV]
8	B-21011-30507		SCREW	ｽｸﾘｭ	1	[3SV]
-	B-21011-30507		SCREW	ｽｸﾘｭ	2	[4SV]
-	B-21011-30507		SCREW	ｽｸﾘｭ	3	[5SV]
9	B-21011-30603		SPRING	ｽﾌﾟﾘﾝｸﾞ	1	[3SV]
-	B-21011-30603		SPRING	ｽﾌﾟﾘﾝｸﾞ	2	[4SV]
-	B-21011-30603		SPRING	ｽﾌﾟﾘﾝｸﾞ	3	[5SV]
10	B-21011-32404		POPPET	ﾎﾟﾍﾟｯﾄ	1	[3SV]
-	B-21011-32404		POPPET	ﾎﾟﾍﾟｯﾄ	2	[4SV]
-	B-21011-32404		POPPET	ﾎﾟﾍﾟｯﾄ	3	[5SV]
11	B-21011-30604		SPRING	ｽﾌﾟﾘﾝｸﾞ	1	[3SV]
-	B-21011-30604		SPRING	ｽﾌﾟﾘﾝｸﾞ	2	[4SV]
-	B-21011-30604		SPRING	ｽﾌﾟﾘﾝｸﾞ	3	[5SV]
12	B-21001-00106		O-RING	Oﾘﾝｸﾞ	1	[3SV]
-	B-21001-00106		O-RING	Oﾘﾝｸﾞ	2	[4SV]
-	B-21001-00106		O-RING	Oﾘﾝｸﾞ	3	[5SV]
13	B-91111-60102		SCREW	ｽｸﾘｭ	2	[3SV]
-	B-91111-60102		SCREW	ｽｸﾘｭ	4	[4SV]
-	B-91111-60102		SCREW	ｽｸﾘｭ	6	[5SV]
14	B-92703-06181		BOLT	ﾎﾞﾙﾄ	2	[3SV]
-	B-92703-06181		BOLT	ﾎﾞﾙﾄ	4	[4SV]
-	B-92703-06181		BOLT	ﾎﾞﾙﾄ	6	[5SV]

FIG.151 CONTROL VALVE FITTING

(F5017390) コントロールバルブフィッティング

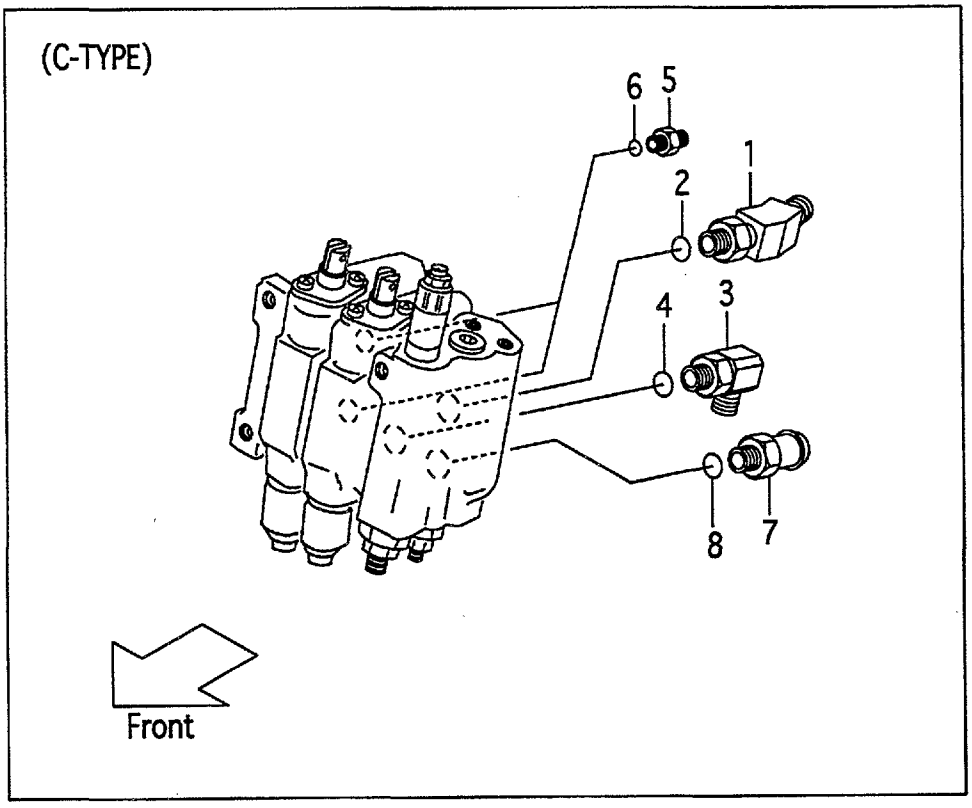

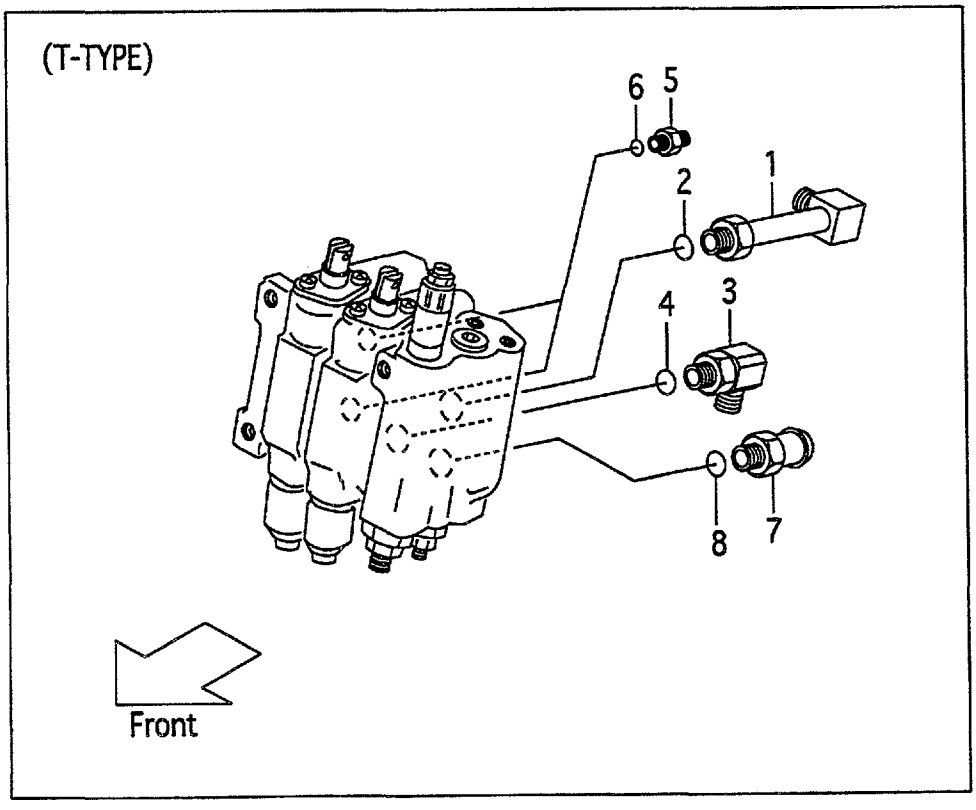

A:FG10C19 FG15C19 FG18C19 C:FD10C19 FD15C19 FD18C19
B:FG10T19 FG15T19 FG18T19 D:FD10T19 FD15T19 FD18T19

Item No	Part No.	Mark	Description		Req'd	Remarks : Serial No.
A1	216M7-62101		ADAPTER-ASSY	ｱﾀﾞﾌﾟﾀｱｯｾﾝ	1	A,C INC.1,2
-	22777-60301		ELBOW-ASSY	ｴﾙﾎﾞｱｯｾﾝ	1	B,D INC.1,2
1	NO PART NO.	#	ADAPTER	ｱﾀﾞﾌﾟﾀ	1	A,C
-	NO PART NO.	#	ELBOW	ｴﾙﾎﾞ	1	B,D
2	03320-00180		O-RING	Oﾘﾝｸﾞ	1	
A2	24237-62341		ELBOW-ASSY	ｴﾙﾎﾞｱｯｾﾝ	1	INC.3,4
3	NO PART NO.	#	ELBOW	ｴﾙﾎﾞ	1	
4	03320-00180		O-RING	Oﾘﾝｸﾞ	1	
A3	277H7-60601		NIPPLE-ASSY	ﾆｯﾌﾟﾙｱｯｾﾝ	2	INC.5,6
5	NO PART NO.	#	NIPPLE	ﾆｯﾌﾟﾙ	2	
6	03320-00140		O-RING	Oﾘﾝｸﾞ	2	
A4	24237-60411		NIPPLE-ASSY	ﾆｯﾌﾟﾙｱｯｾﾝ	1	INC.7,8
7	NO PART NO.	#	NIPPLE	ﾆｯﾌﾟﾙ	1	
8	03320-00180		O-RING	Oﾘﾝｸﾞ	1	

FIG.152 VALVE CONTROL [2SV]

(F50173A0) ﾊﾞﾙﾌﾞｺﾝﾄﾛｰﾙ

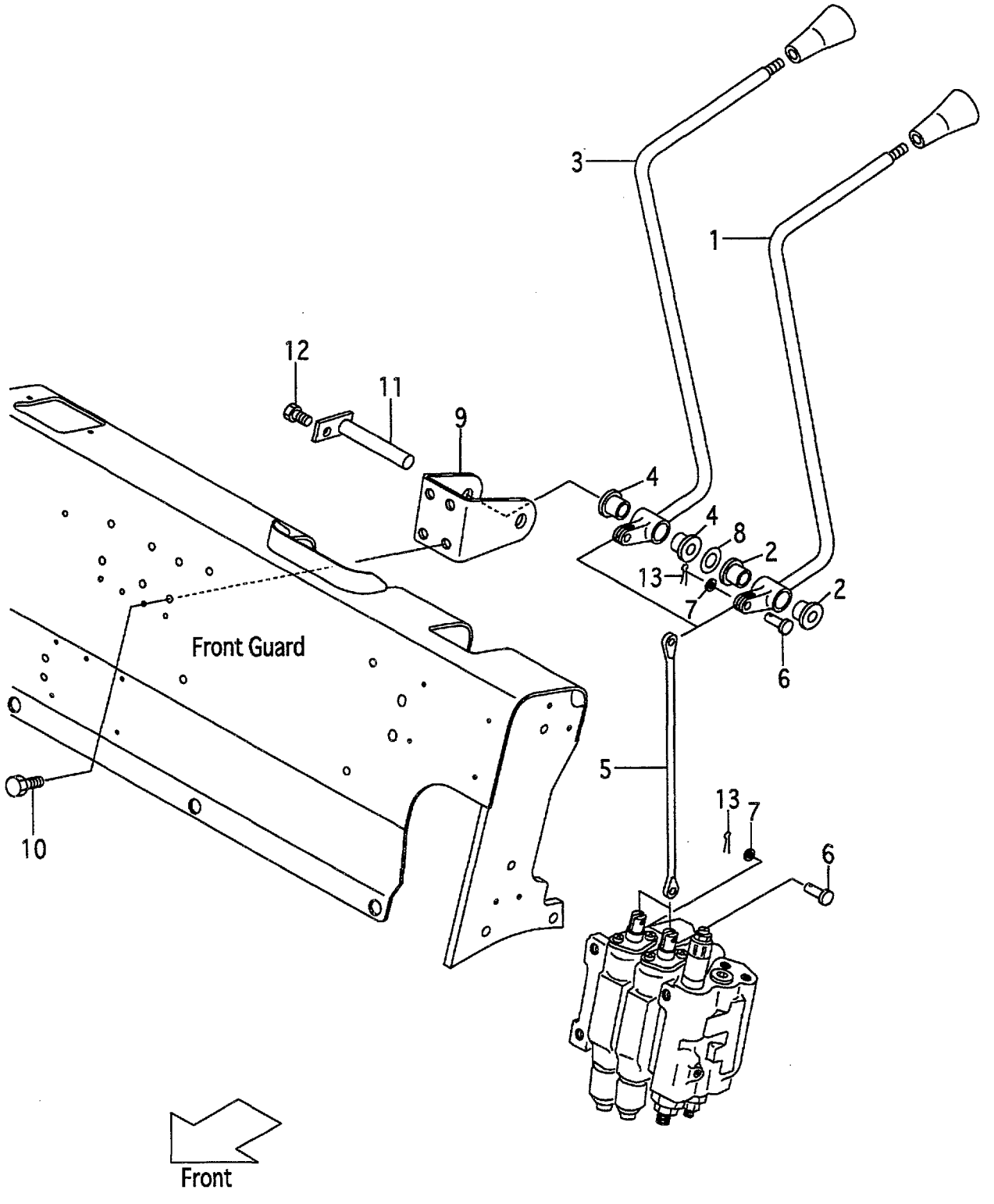

FIG.152
(F50173A0)

A:FG10C19 FG10T19 FG15C19 FG15T19 FG18C19 FG18T19
B:FD10C19 FD10T19 FD15C19 FD15T19 FD18C19 FD18T19

Item No	Part No.	Mark	Description		Req'd	Remarks : Serial No.
A1	216G7-40012		LEVER-ASSY,LIFT	ﾘﾌﾄﾚﾊﾞｰｱｯｾﾝ	1	INC.1,2
1	NO PART NO.	#	LEVER,LIFT	ﾚﾊﾞｰ	1	
2	214A7-42071		BUSHING	ﾌﾞｯｼﾝｸﾞ	2	
A2	216G7-40022		LEVER-ASSY,TILT	ﾃｨﾙﾄﾚﾊﾞｰｱｯｾﾝ	1	INC.3,4
3	NO PART NO.	#	LEVER,TILT	ﾚﾊﾞｰ	1	
4	214A7-42071		BUSHING	ﾌﾞｯｼﾝｸﾞ	2	
5	214A7-42171		JOINT	ｼﾞｮｲﾝﾄ	2	
6	22717-40061		PIN,CLEVIS	ﾋﾟﾝ	4	
7	02000-00005		WASHER	ﾜｯｼｬ	4	
8	22517-40051		SHIM,T-0.2	ｼﾑ	3	
9	216G7-42001		BRACKET,VALVE-LEVER	ﾌﾞﾗｹｯﾄ	1	
10	216H3-92281		BOLT	ﾎﾞﾙﾄ	4	
11	23647-40041		SHAFT,2SV-LEVER	ｼｬﾌﾄ	1	
-	529F3-70401		SHAFT,2SV-LEVER	ｼｬﾌﾄ	1	[FC]
12	01183-06012		BOLT	ﾎﾞﾙﾄ	1	
13	02200-16010		PIN,COTTER	ﾋﾟﾝ	4	

FIG.153 VALVE CONTROL [3SV]

(F50173B0) ﾊﾞﾙﾌﾞｺﾝﾄﾛｰﾙ

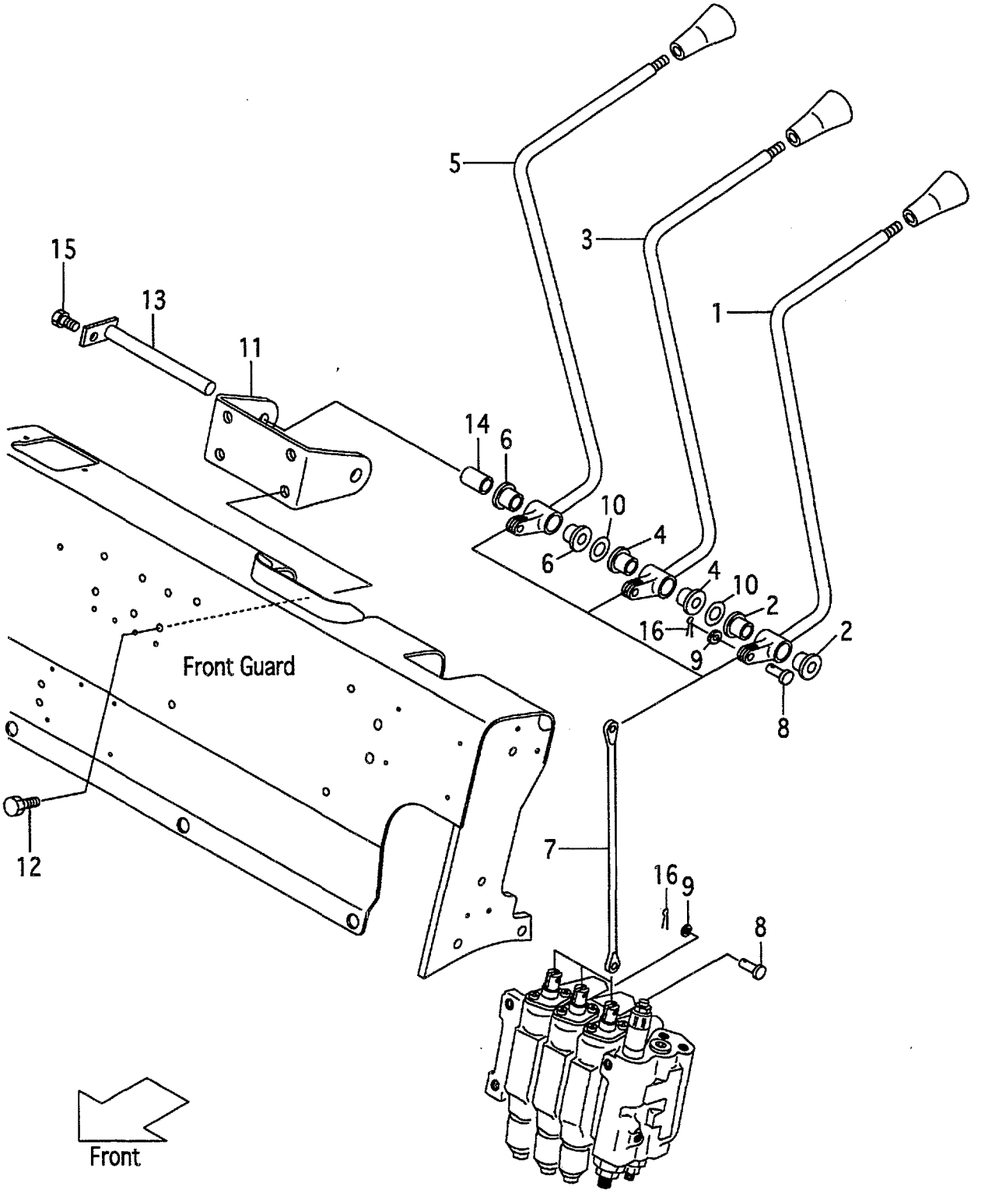

A:FG10C19 FG10T19 FG15C19 FG15T19 FG18C19 FG18T19
B:FD10C19 FD10T19 FD15C19 FD15T19 FD18C19 FD18T19

Item No	Part No.	Mark	Description		Req'd	Remarks : Serial No.
A1	216G7-40012		LEVER-ASSY,LIFT	ﾘﾌﾄﾚﾊﾞｰｱｯｾﾝ	1	[3SV] INC.1,2
1	NO PART NO.	#	LEVER,LIFT	ﾚﾊﾞｰ	1	[3SV]
2	214A7-42071		BUSHING	ﾌﾞｯｼﾝｸﾞ	2	[3SV]
A2	216G7-40022		LEVER-ASSY,TILT	ﾃｨﾙﾄﾚﾊﾞｰｱｯｾﾝ	1	[3SV] INC.3,4
3	NO PART NO.	#	LEVER,TILT	ﾚﾊﾞｰ	1	[3SV]
4	214A7-42071		BUSHING	ﾌﾞｯｼﾝｸﾞ	2	[3SV]
A3	216G7-40032		LEVER-ASSY,THIRD	ｻｰﾄﾞﾚﾊﾞｰｱｯｾﾝ	1	[3SV] INC.5,6
5	NO PART NO.	#	LEVER,THIRD	ﾚﾊﾞｰ	1	[3SV]
6	214A7-42071		BUSHING	ﾌﾞｯｼﾝｸﾞ	2	[3SV]
7	214A7-42171		JOINT	ｼﾞｮｲﾝﾄ	3	[3SV]
8	22717-40061		PIN,CLEVIS	ﾋﾟﾝ	6	[3SV]
9	02000-00005		WASHER	ﾜｯｼｬ	6	[3SV]
10	22517-40051		SHIM,T-0.2	ｼﾑ	6	[3SV]
11	216G7-42011		BRACKET,VALVE-LEVER	ﾌﾞﾗｹｯﾄ	1	[3SV]
12	216H3-92281		BOLT	ﾎﾞﾙﾄ	4	[3SV]
13	23457-42041		SHAFT,3&4SV-LEVER	ｼｬﾌﾄ	1	[3SV]
-	529F3-70411		SHAFT,3&4SV-LEVER	ｼｬﾌﾄ	1	[3SV/FC]
14	23657-42131		COLLAR	ｶﾗｰ	1	[3SV]
15	01183-06012		BOLT	ﾎﾞﾙﾄ	1	[3SV]
16	02200-16010		PIN,COTTER	ﾋﾟﾝ	6	[3SV]

FIG.154 VALVE CONTROL [4SV]

(F50173C0) ﾊﾞﾙﾌﾞｺﾝﾄﾛｰﾙ

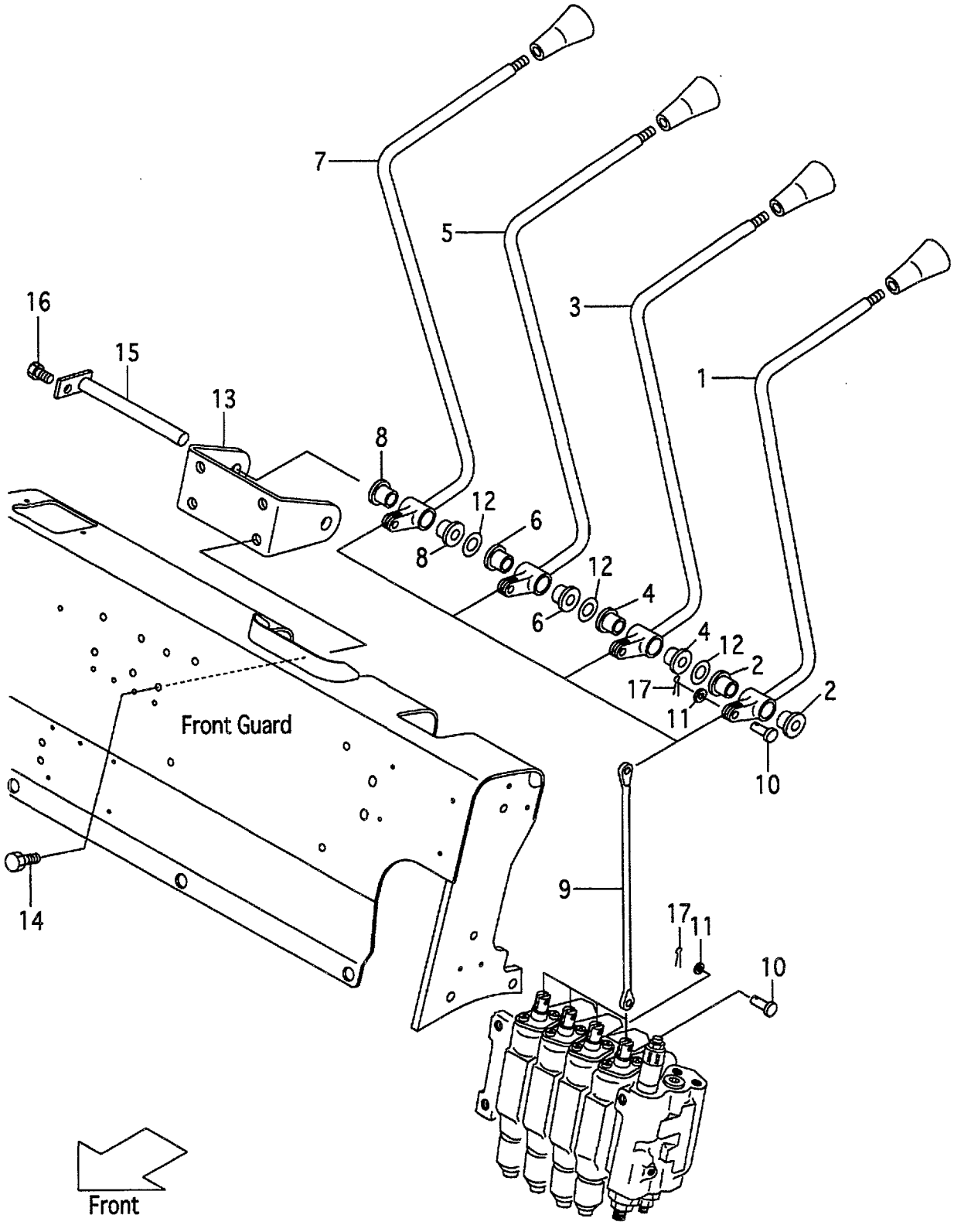

A:FG10C19 FG10T19 FG15C19 FG15T19 FG18C19 FG18T19
B:FD10C19 FD10T19 FD15C19 FD15T19 FD18C19 FD18T19

Item No	Part No.	Mark	Description		Req'd	Remarks : Serial No.
A1	216G7-40012		LEVER-ASSY,LIFT	ﾘﾌﾄﾚﾊﾞｰｱｯｾﾝ	1	[4SV] INC.1,2
1	NO PART NO.	#	LEVER,LIFT	ﾚﾊﾞｰ	1	[4SV]
2	214A7-42071		BUSHING	ﾌﾞｯｼﾝｸﾞ	2	[4SV]
A2	216G7-40022		LEVER-ASSY,TILT	ﾃｨﾙﾄﾚﾊﾞｰｱｯｾﾝ	1	[4SV] INC.3,4
3	NO PART NO.	#	LEVER,TILT	ﾚﾊﾞｰ	1	[4SV]
4	214A7-42071		BUSHING	ﾌﾞｯｼﾝｸﾞ	2	[4SV]
A3	216G7-40032		LEVER-ASSY,THIRD	ｻｰﾄﾞﾚﾊﾞｰｱｯｾﾝ	1	[4SV] INC.5,6
5	NO PART NO.	#	LEVER,THIRD	ﾚﾊﾞｰ	1	[4SV]
6	214A7-42071		BUSHING	ﾌﾞｯｼﾝｸﾞ	2	[4SV]
A4	216G7-40042		LEVER-ASSY,FOURTH	ﾌｫｰｽﾚﾊﾞｰｱｯｾﾝ	1	[4SV] INC.7,8
7	NO PART NO.	#	LEVER,FOURTH	ﾚﾊﾞｰ	1	[4SV]
8	214A7-42071		BUSHING	ﾌﾞｯｼﾝｸﾞ	2	[4SV]
9	214A7-42171		JOINT	ｼﾞｮｲﾝﾄ	4	[4SV]
10	22717-40061		PIN,CLEVIS	ﾋﾟﾝ	8	[4SV]
11	02000-00005		WASHER	ﾜｯｼｬ	8	[4SV]
12	22517-40051		SHIM,T-0.2	ｼﾑ	9	[4SV]
13	216G7-42011		BRACKET,VALVE-LEVER	ﾌﾞﾗｹｯﾄ	1	[4SV]
14	216H3-92281		BOLT	ﾎﾞﾙﾄ	4	[4SV]
15	23457-42041		SHAFT,3&4SV-LEVER	ｼｬﾌﾄ	1	[4SV]
-	529F3-70411		SHAFT,3&4SV-LEVER	ｼｬﾌﾄ	1	[4SV/FC]
16	01183-06012		BOLT	ﾎﾞﾙﾄ	1	[4SV]
17	02200-16010		PIN,COTTER	ﾋﾟﾝ	8	[4SV]

FIG.155 VALVE CONTROL [5SV]

(F50173D0) ﾊﾞﾙﾌﾞｺﾝﾄﾛｰﾙ

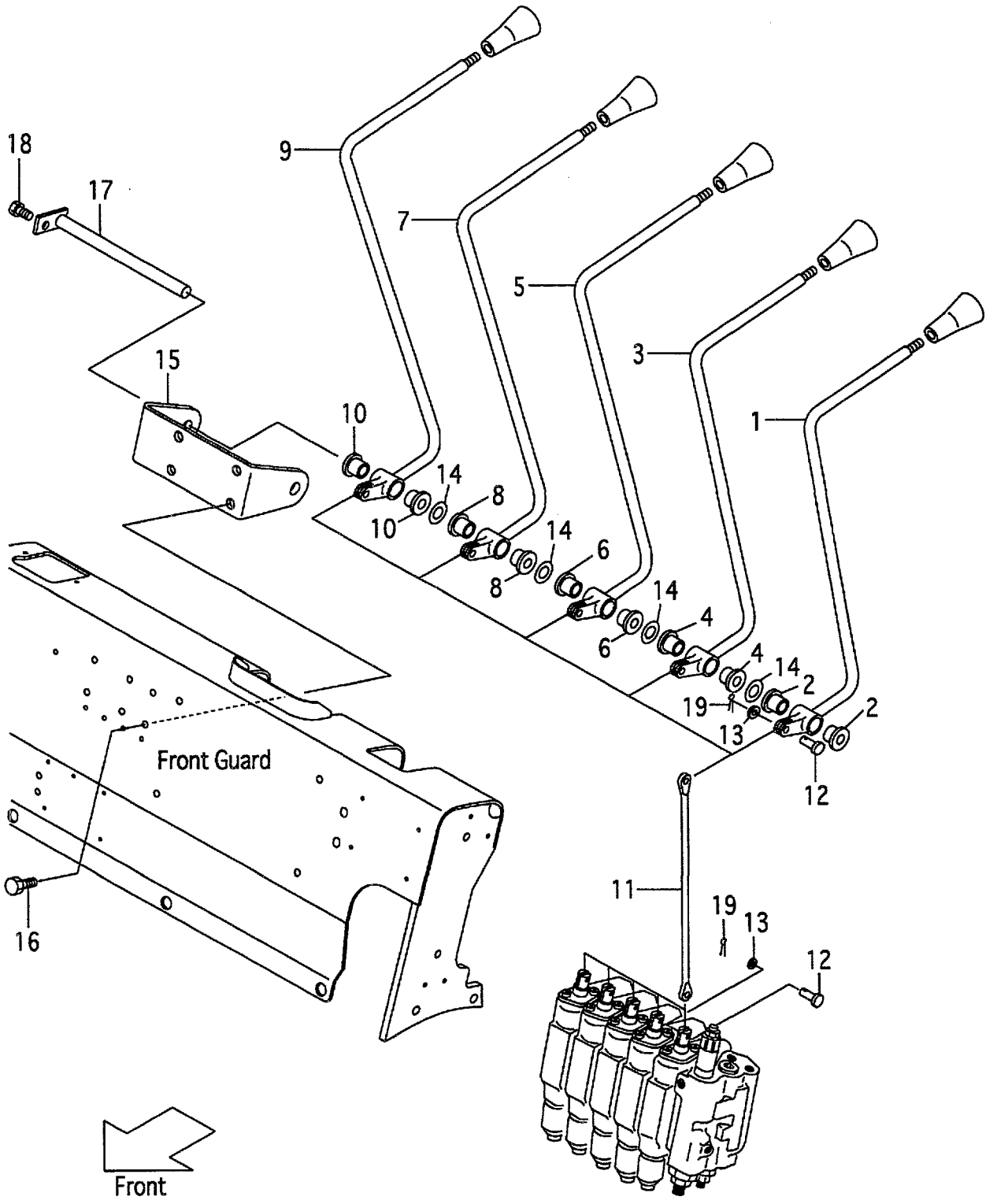

A:FG10C19 FG10T19 FG15C19 FG15T19 FG18C19 FG18T19
B:FD10C19 FD10T19 FD15C19 FD15T19 FD18C19 FD18T19

Item No	Part No.	Mark	Description		Req'd	Remarks : Serial No.
A1	216G7-40012		LEVER-ASSY,LIFT	ﾘﾌﾄﾚﾊﾞｰｱｯｾﾝ	1	[5SV] INC.1,2
1	NO PART NO.	#	LEVER,LIFT	ﾚﾊﾞｰ	1	[5SV]
2	214A7-42071		BUSHING	ﾌﾞｯｼﾝｸﾞ	2	[5SV]
A2	216G7-40022		LEVER-ASSY,TILT	ﾃｨﾙﾄﾚﾊﾞｰｱｯｾﾝ	1	[5SV] INC.3,4
3	NO PART NO.	#	LEVER,TILT	ﾚﾊﾞｰ	1	[5SV]
4	214A7-42071		BUSHING	ﾌﾞｯｼﾝｸﾞ	2	[5SV]
A3	216G7-40032		LEVER-ASSY,THIRD	ｻｰﾄﾞﾚﾊﾞｰｱｯｾﾝ	1	[5SV] INC.5,6
5	NO PART NO.	#	LEVER,THIRD	ﾚﾊﾞｰ	1	[5SV]
6	214A7-42071		BUSHING	ﾌﾞｯｼﾝｸﾞ	2	[5SV]
A4	216G7-40042		LEVER-ASSY,FOURTH	ﾌｫｰｽﾚﾊﾞｰｱｯｾﾝ	1	[5SV] INC.7,8
7	NO PART NO.	#	LEVER,FOURTH	ﾚﾊﾞｰ	1	[5SV]
8	214A7-42071		BUSHING	ﾌﾞｯｼﾝｸﾞ	2	[5SV]
A5	234A7-40052		LEVER-ASSY,FIFTH	ﾚﾊﾞｰｱｯｾﾝ	1	[5SV] INC.9,10
9	NO PART NO.	#	LEVER,FIFTH	ﾚﾊﾞｰ	1	[5SV]
10	214A7-42071		BUSHING	ﾌﾞｯｼﾝｸﾞ	2	[5SV]
11	214A7-42171		JOINT	ｼﾞｮｲﾝﾄ	5	[5SV]
12	22717-40061		PIN,CLEVIS	ﾋﾟﾝ	10	[5SV]
13	02000-00005		WASHER	ﾜｯｼｬ	10	[5SV]
14	22517-40051		SHIM,T-0.2	ｼﾑ	12	[5SV]
15	234A7-42011		BRACKET,VALVE-LEVER	ﾌﾞﾗｹｯﾄ	1	[5SV]
16	216H3-92281		BOLT	ﾎﾞﾙﾄ	4	[5SV]
17	55593-02371		SHAFT,5SV-LEVER	ｼｬﾌﾄ	1	[5SV]
-	529F3-70421		SHAFT,5SV-LEVER	ｼｬﾌﾄ	1	[5SV/FC]
18	01183-06012		BOLT	ﾎﾞﾙﾄ	1	[5SV]
19	02200-16010		PIN,COTTER	ﾋﾟﾝ	10	[5SV]

FIG.156 VALVE CONTROL KNOB

(F50173E0) ﾊﾞﾙﾌﾞｺﾝﾄﾛｰﾙﾉﾌﾞ

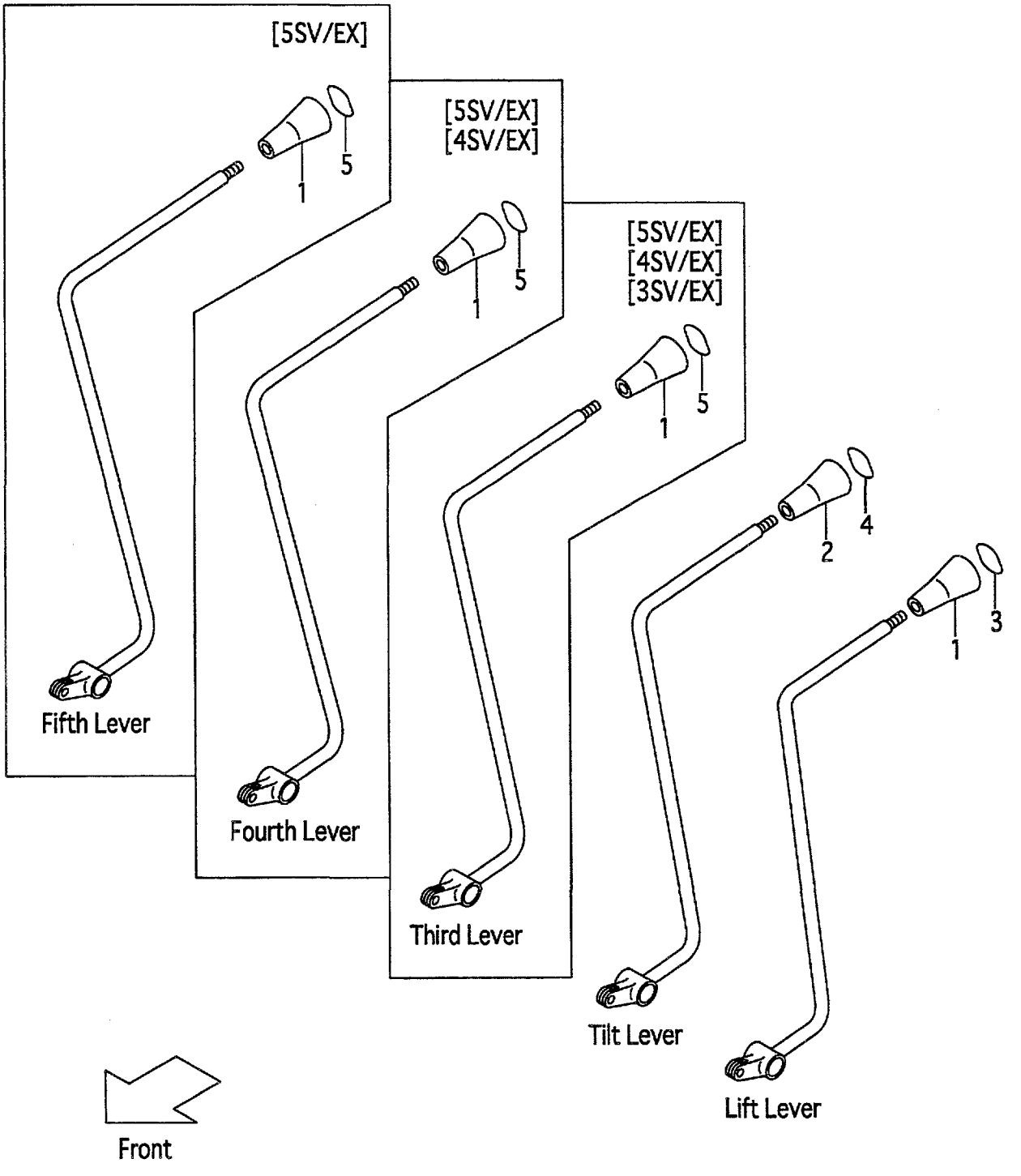

A:FG10C19 FG10T19 FG15C19 FG15T19 FG18C19 FG18T19
B:FD10C19 FD10T19 FD15C19 FD15T19 FD18C19 FD18T19

Item No	Part No.	Mark	Description	Req'd	Remarks : Serial No.
1	214A7-42181		KNOB,VALVE-LEVER ﾉﾌﾞ	1	
-	214A7-42181		KNOB,VALVE-LEVER ﾉﾌﾞ	2	[3SV/EX]
-	214A7-42181		KNOB,VALVE-LEVER ﾉﾌﾞ	3	[4SV/EX]
-	214A7-42181		KNOB,VALVE-LEVER ﾉﾌﾞ	4	[5SV/EX]
2	281E7-42101		KNOB,VALVE-LEVER ﾉﾌﾞ	1	
3	214A7-42191		DECAL,SYMBOL,LIFT ﾃﾞｶﾙ	1	
4	214A7-42201		DECAL,SYMBOL,TILT ﾃﾞｶﾙ	1	
5	514A2-72411		DECAL,SYMBOL,SPACE ﾃﾞｶﾙ	1	[3SV/EX]
-	514A2-72411		DECAL,SYMBOL,SPACE ﾃﾞｶﾙ	2	[4SV/EX]
-	514A2-72411		DECAL,SYMBOL,SPACE ﾃﾞｶﾙ	3	[5SV/EX]

FIG.157 HYDRAULIC LINE (MAIN)(1/3)(G-TYPE)

(F5017610) ﾊｲﾄﾞﾛﾘｯｸﾗｲﾝ(1/3)

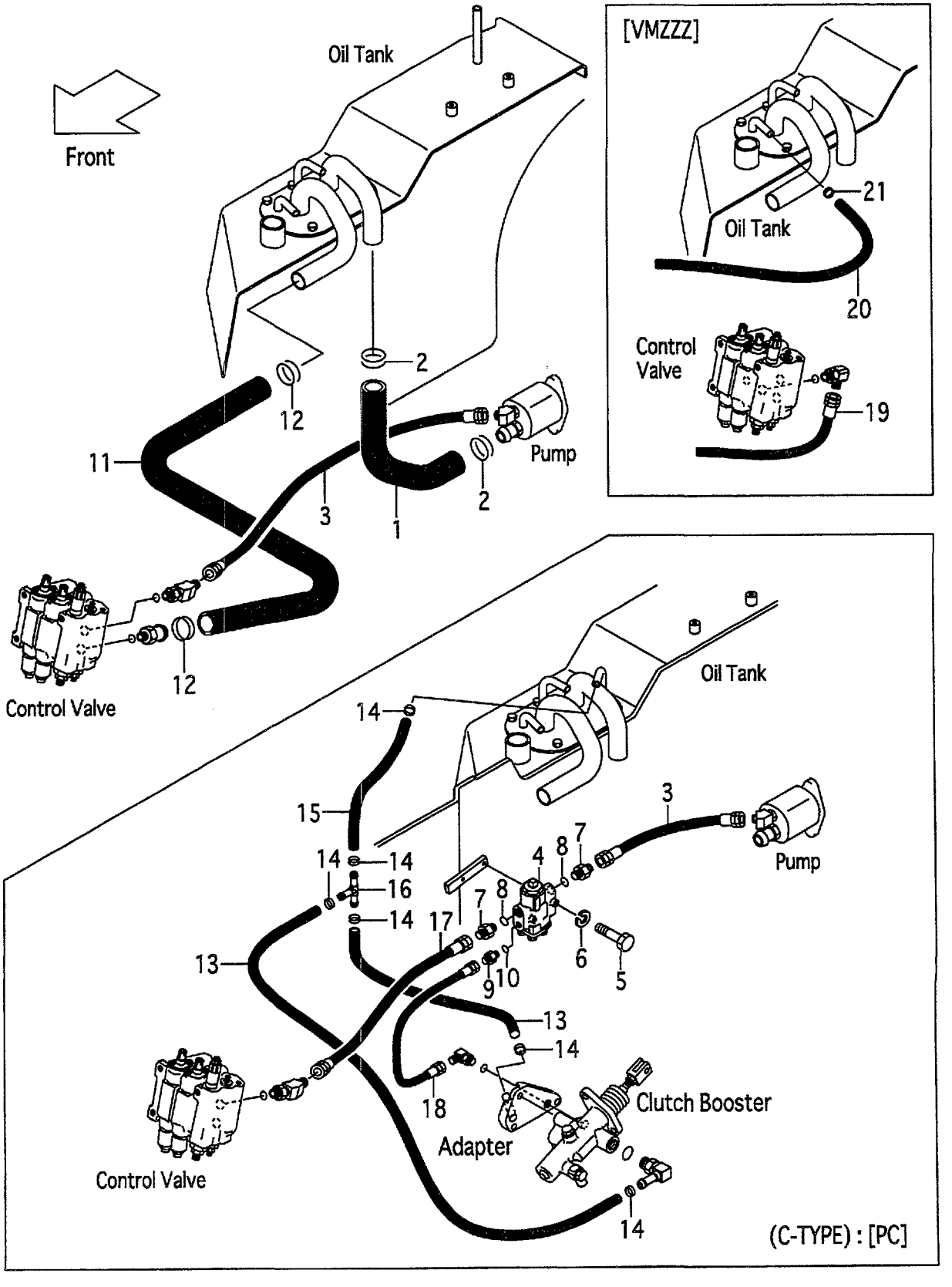

A:FG10C19 FG15C19 FG18C19
B:FG10T19 FG15T19 FG18T19

FIG.157
(F5017610)

Item No	Part No.	Mark	Description		Req'd	Remarks : Serial No.
1	218G7-62111		HOSE,SUCTION	ﾎｰｽ	1	
2	04911-00046		CLIP	ｸﾘｯﾌﾟ	2	
3	04691-04092		HOSE	ﾎｰｽ	1	A
-	04691-04105		HOSE	ﾎｰｽ	1	B
-	04691-04045		HOSE	ﾎｰｽ	1	A [PC]
4	234H7-60301		VALVE,FLOW-PRIORITY	ﾊﾞﾙﾌﾞ	1	A [PC]
5	01100-06055		BOLT	ﾎﾞﾙﾄ	2	A [PC]
6	02010-00006		WASHER	ﾜｯｼｬ	2	A [PC]
A1	04134-20404		NIPPLE-ASSY	ﾆｯﾌﾟﾙｱｯｾﾝ	2	A [PC] INC.7,8
7	NO PART NO.	#	NIPPLE	ﾆｯﾌﾟﾙ	2	A [PC]
8	03320-00180		O-RING	Oﾘﾝｸﾞ	2	A [PC]
A2	23657-60311		NIPPLE-ASSY	ﾆｯﾌﾟﾙｱｯｾﾝ	1	A [PC] INC.9,10
9	NO PART NO.	#	NIPPLE	ﾆｯﾌﾟﾙ	1	A [PC]
10	03320-00140		O-RING	Oﾘﾝｸﾞ	1	A [PC]
11	216G7-62211		HOSE,RETURN	ﾎｰｽ	1	
12	04911-00044		CLIP	ｸﾘｯﾌﾟ	2	
13	04710-04105		HOSE	ﾎｰｽ	2	A [PC]
14	04911-00021		CLIP	ｸﾘｯﾌﾟ	6	A [PC]
15	04710-04050		HOSE	ﾎｰｽ	1	A [PC]
16	53675-55051		THREE-WAY	ｽﾘｰｳｴｲ	1	A [PC]
17	04691-04046		HOSE	ﾎｰｽ	1	A [PC]
18	04691-02065		HOSE	ﾎｰｽ	1	A [PC]
19	216G8-02502		HOSE	ﾎｰｽ	1	[VMZZZ]
20	23678-40095		TUBE,VINYL	ﾁｭｰﾌﾞ	1	[VMZZZ]
21	04911-00018		CLIP	ｸﾘｯﾌﾟ	1	[VMZZZ]

FIG.158 HYDRAULIC LINE (MAIN)(1/3)(D-TYPE)

(F5017620) ﾊｲﾄﾞﾛﾘｯｸﾗｲﾝ(1/3)

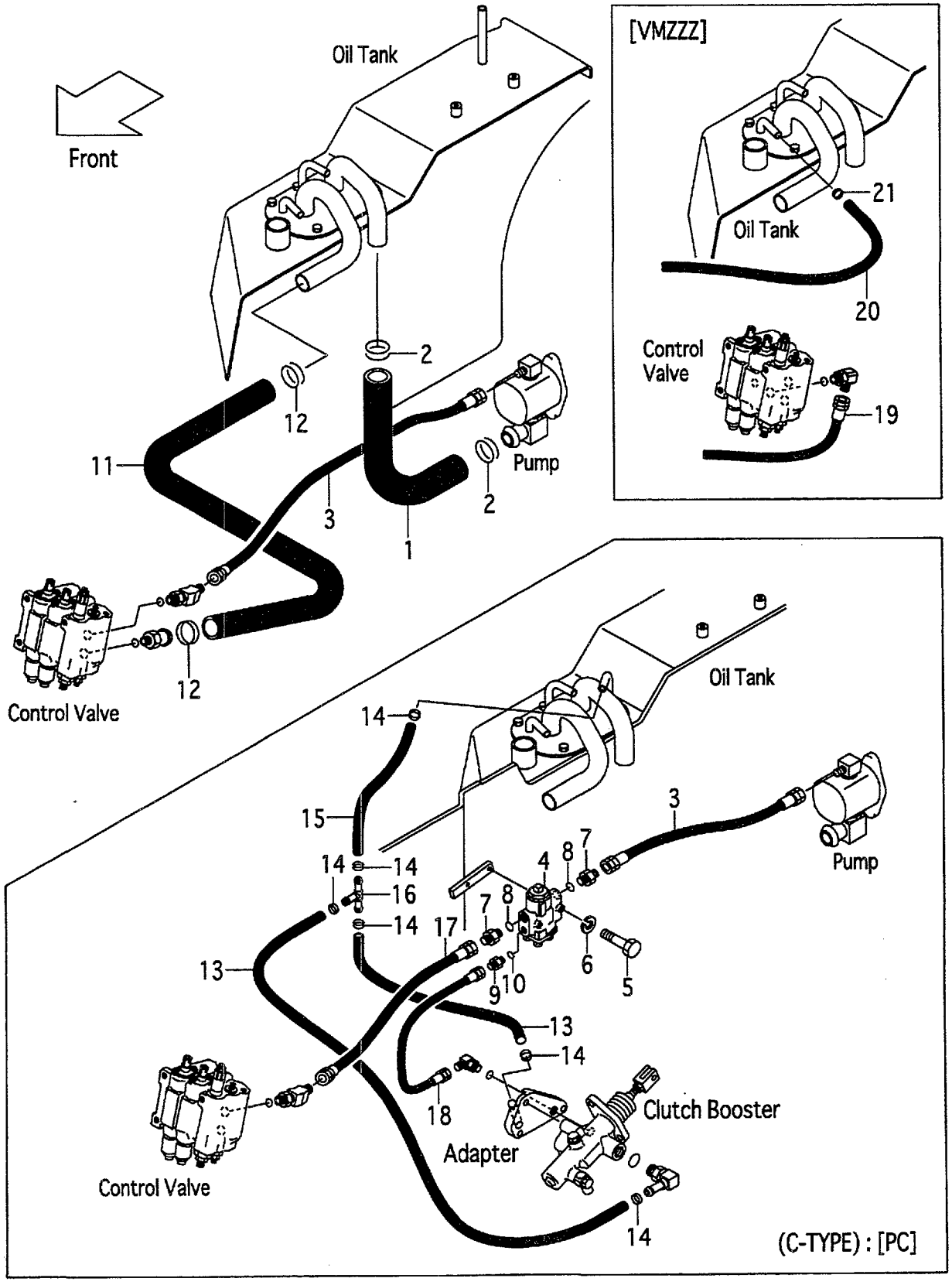

A:FD10C19 FD15C19 FD18C19
B:FD10T19 FD15T19 FD18T19

FIG.158
(F5017620)

Item No	Part No.	Mark	Description		Req'd	Remarks : Serial No.
1	219G7-62111		HOSE,SUCTION	ﾎｰｽ	1	
2	04911-00046		CLIP	ｸﾘｯﾌﾟ	2	
3	04691-04092		HOSE	ﾎｰｽ	1	A
-	04691-04105		HOSE	ﾎｰｽ	1	B
-	04691-04045		HOSE	ﾎｰｽ	1	A [PC]
4	234H7-60301		VALVE,FLOW-PRIORITY	ﾊﾞﾙﾌﾞ	1	A [PC]
5	01100-06055		BOLT	ﾎﾞﾙﾄ	2	A [PC]
6	02010-00006		WASHER	ﾜｯｼｬ	2	A [PC]
A1	04134-20404		NIPPLE-ASSY	ﾆｯﾌﾟﾙｱｯｾﾝ	2	A [PC] INC.7,8
7	NO PART NO.	#	NIPPLE	ﾆｯﾌﾟﾙ	2	A [PC]
8	03320-00180		O-RING	Oﾘﾝｸﾞ	2	A [PC]
A2	23657-60311		NIPPLE-ASSY	ﾆｯﾌﾟﾙｱｯｾﾝ	1	A [PC] INC.9,10
9	NO PART NO.	#	NIPPLE	ﾆｯﾌﾟﾙ	1	A [PC]
10	03320-00140		O-RING	Oﾘﾝｸﾞ	1	A [PC]
11	216G7-62211		HOSE,RETURN	ﾎｰｽ	1	
12	04911-00044		CLIP	ｸﾘｯﾌﾟ	2	
13	04710-04105		HOSE	ﾎｰｽ	2	A [PC]
14	04911-00021		CLIP	ｸﾘｯﾌﾟ	6	A [PC]
15	04710-04050		HOSE	ﾎｰｽ	1	A [PC]
16	53675-55051		THREE-WAY	ｽﾘｰｳｴｲ	1	A [PC]
17	04691-04046		HOSE	ﾎｰｽ	1	A [PC]
18	04691-02065		HOSE	ﾎｰｽ	1	A [PC]
19	216G8-02502		HOSE	ﾎｰｽ	1	[VMZZZ]
20	23678-40095		TUBE,VINYL	ﾁｭｰﾌﾞ	1	[VMZZZ]
21	04911-00018		CLIP	ｸﾘｯﾌﾟ	1	[VMZZZ]

FIG.159 HYDRAULIC LINE (MAIN)(2/3)

(F5017630) ﾊｲﾄﾞﾛﾘｯｸﾗｲﾝ(2/3)

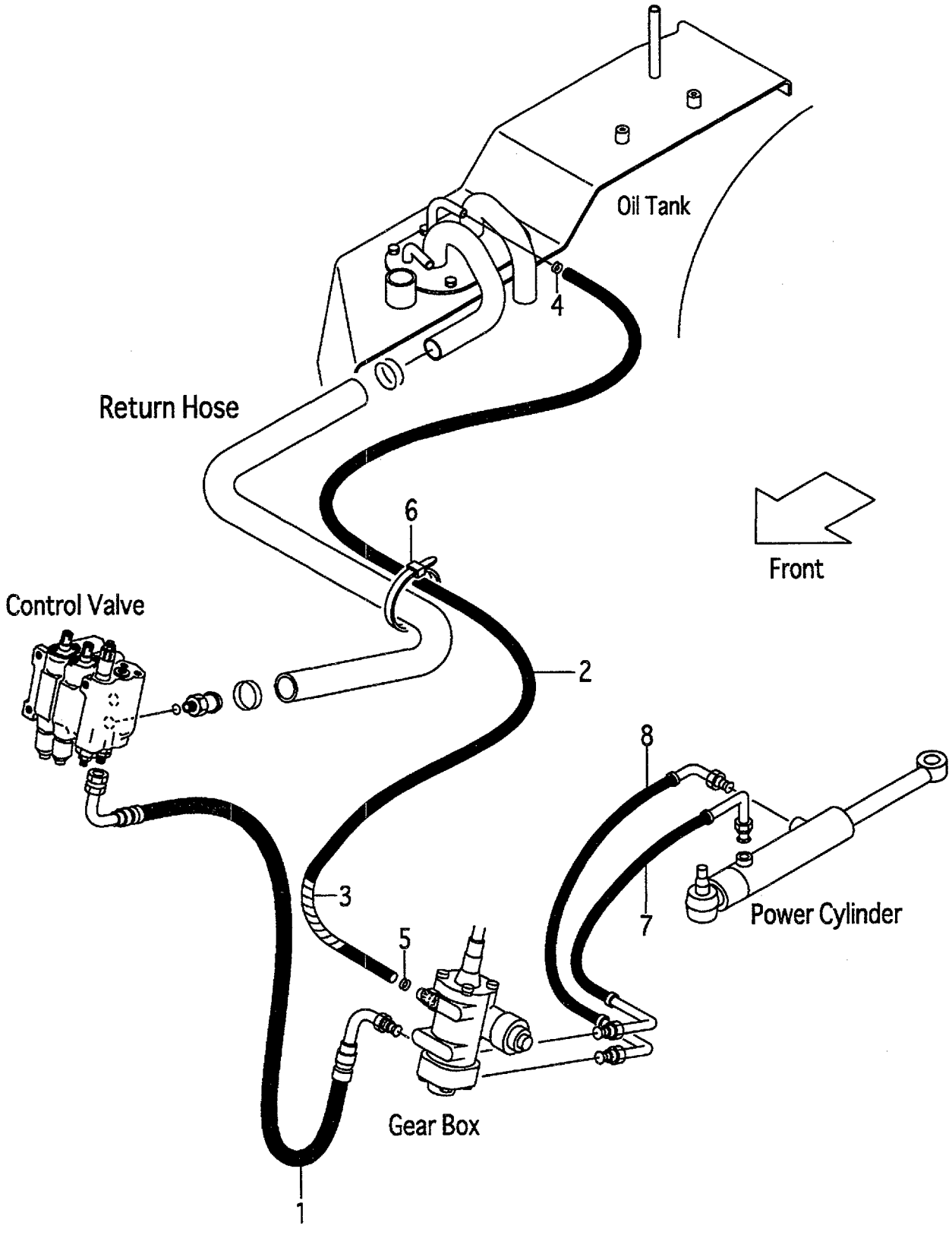

A:FG10C19 FG10T19 FG15C19 FG15T19 FG18C19 FG18T19
B:FD10C19 FD10T19 FD15C19 FD15T19 FD18C19 FD18T19

Item No	Part No.	Mark	Description		Req'd	Remarks : Serial No.
1	218G7-62081		HOSE	ﾎｰｽ	1	
A1	218G7-62261		HOSE-ASSY,PS-RETURN	ﾎｰｽｱｯｾﾝ	1	INC.2,3
2	04710-04140		HOSE	ﾎｰｽ	1	
3	NO PART NO.	#	TUBE,SPIRAL	ﾁｭｰﾌﾞ	1	
4	04911-00021		CLIP	ｸﾘｯﾌﾟ	1	
5	04911-00020		CLIP	ｸﾘｯﾌﾟ	1	
6	04913-10200		BAND	ﾊﾞﾝﾄﾞ	2	
7	218G7-60301		HOSE,PS,FRONT	ﾎｰｽ	1	
8	218G7-60311		HOSE,PS,REAR	ﾎｰｽ	1	

HYDRAULIC LINE
FIG.160 (MAIN)(2/3)[EXC][EXE][EXN][OBT][PSO]
(F5017640) ﾊｲﾄﾞﾛﾘｯｸﾗｲﾝ(2/3)

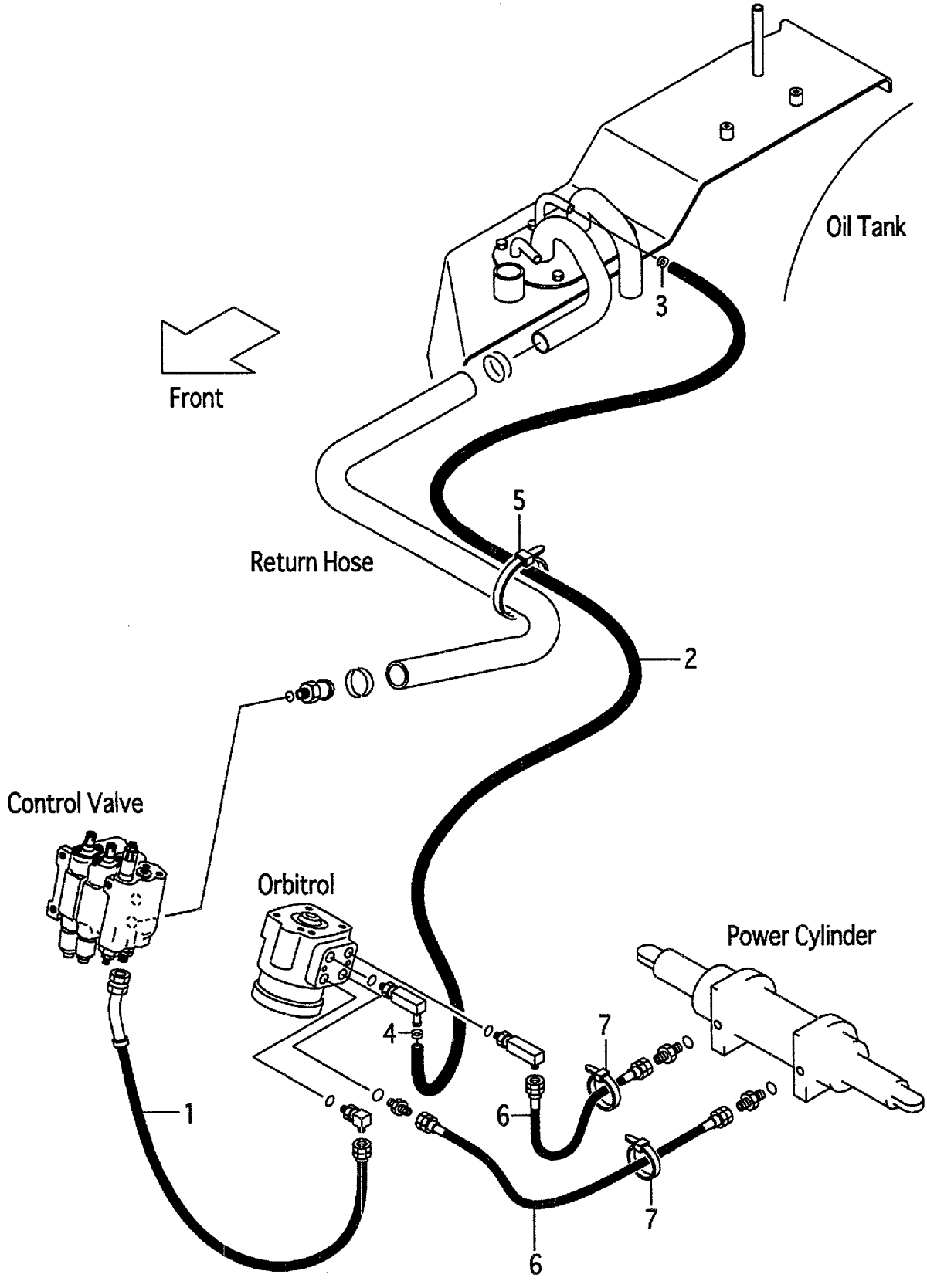

A:FG10C19 FG10T19 FG15C19 FG15T19 FG18C19 FG18T19
B:FD10C19 FD10T19 FD15C19 FD15T19 FD18C19 FD18T19

Item No	Part No.	Mark	Description		Req'd	Remarks : Serial No.
1	215E7-62091		HOSE	ﾎｰｽ	1	[EXC][EXE][EXN][OBT][PSO] [EXB/OBT][EXB/PSO]
2	04710-04155		HOSE	ﾎｰｽ	1	[EXC][EXE][EXN][OBT][PSO] [EXB/OBT][EXB/PSO]
3	04911-00021		CLIP	ｸﾘｯﾌﾟ	1	[EXC][EXE][EXN][OBT][PSO] [EXB/OBT][EXB/PSO]
4	04911-00020		CLIP	ｸﾘｯﾌﾟ	1	[EXC][EXE][EXN][OBT][PSO] [EXB/OBT][EXB/PSO]
5	27042-42312		BAND,CABLE	ﾊﾞﾝﾄﾞ	2	[EXC][EXE][EXN][OBT][PSO] [EXB/OBT][EXB/PSO]
6	510F2-42201		HOSE,PS	ﾎｰｽ	2	[EXC][EXE][EXN][OBT][PSO] [EXB/OBT][EXB/PSO]
7	04913-11380		BAND,INSHULOCK	ﾊﾞﾝﾄﾞ	2	[EXC][EXE][EXN][OBT][PSO] [EXB/OBT][EXB/PSO]

FIG.161 HYDRAULIC LINE (MAIN)(2/3)[(EXC,EXE,EXN)/PSS]

(F50176A0) ﾊｲﾄﾞﾛﾘｯｸﾗｲﾝ(2/3)

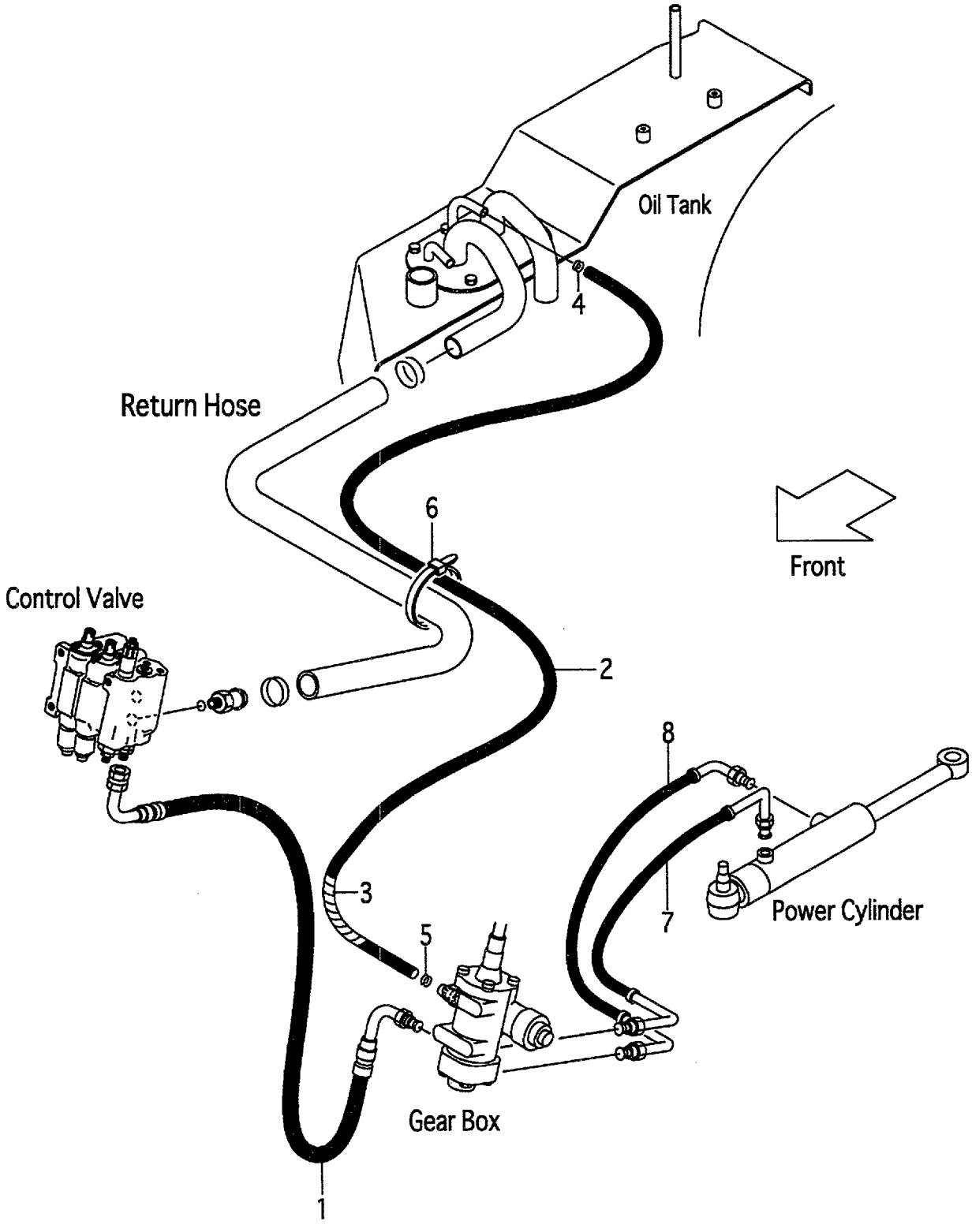

A:FG10C19 FG10T19 FG15C19 FG15T19 FG18C19 FG18T19
B:FD10C19 FD10T19 FD15C19 FD15T19 FD18C19 FD18T19

FIG.161
(F50176A0)

Item No	Part No.	Mark	Description		Req'd	Remarks : Serial No.
1	218G7-62081		HOSE	ホース	1	[EXC/PSS][EXE/PSS][EXN/PSS]
A1	218G7-62261		HOSE-ASSY,PS-RETURN	ホースアッセン	1	[EXC/PSS][EXE/PSS][EXN/PSS] INC.2,3
2	04710-04140		HOSE	ホース	1	[EXC/PSS][EXE/PSS][EXN/PSS]
3	NO PART NO.	‡	TUBE,SPIRAL	チューブ゛	1	[EXC/PSS][EXE/PSS][EXN/PSS]
4	04911-00021		CLIP	クリップ゜	1	[EXC/PSS][EXE/PSS][EXN/PSS]
5	04911-00020		CLIP	クリップ゜	1	[EXC/PSS][EXE/PSS][EXN/PSS]
6	04913-10200		BAND	バンド゛	2	[EXC/PSS][EXE/PSS][EXN/PSS]
7	218G7-60301		HOSE,PS,FRONT	ホース	1	[EXC/PSS][EXE/PSS][EXN/PSS]
8	218G7-60311		HOSE,PS,REAR	ホース	1	[EXC/PSS][EXE/PSS][EXN/PSS]

FIG.162 HYDRAULIC LINE (MAIN)(3/3)

(F5017650) ﾊｲﾄﾞﾛﾘｯｸﾗｲﾝ(3/3)

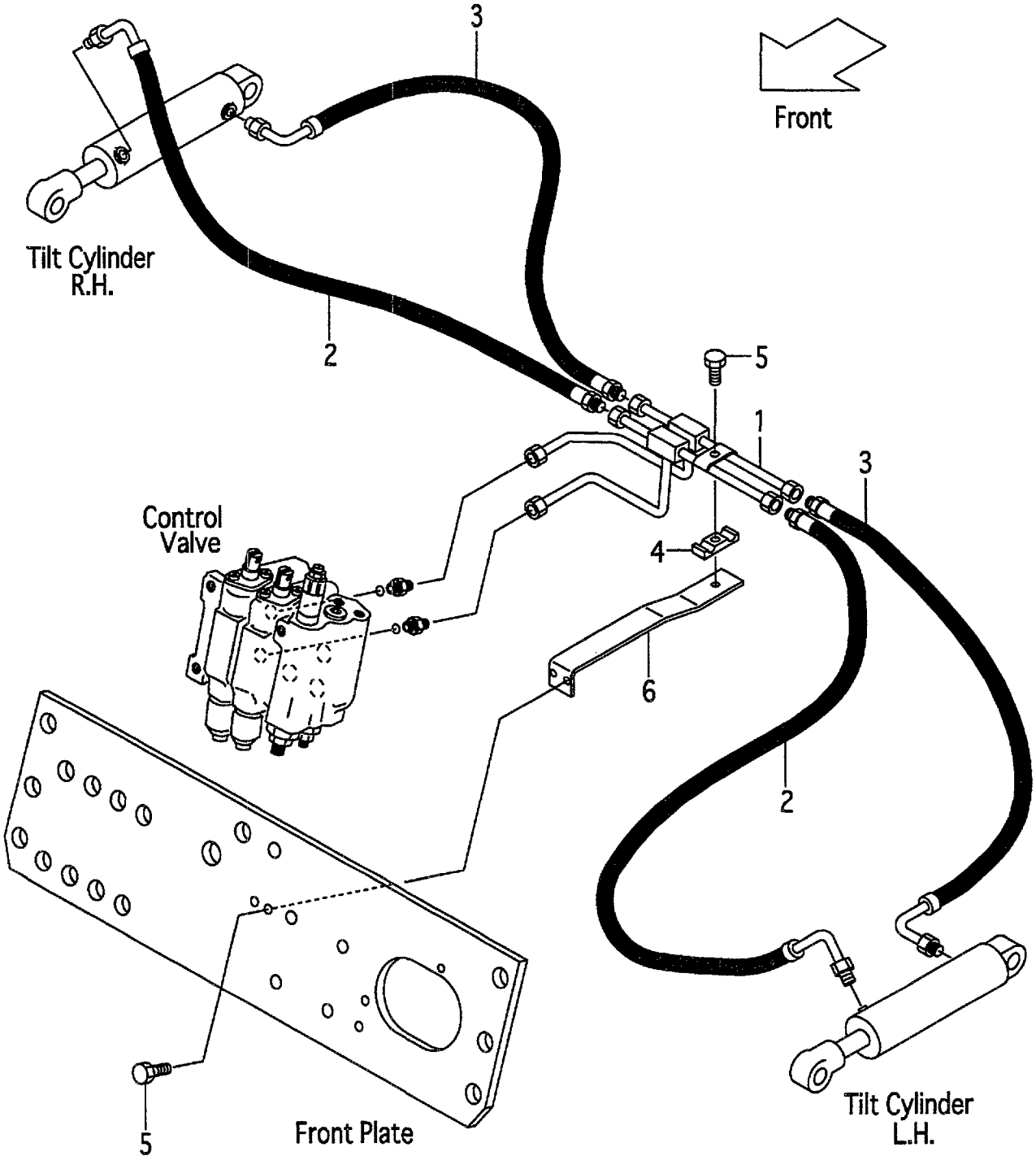

A:FG10C19 FG10T19 FG15C19 FG15T19 FG18C19 FG18T19
B:FD10C19 FD10T19 FD15C19 FD15T19 FD18C19 FD18T19

Item No	Part No.	Mark	Description		Req'd	Remarks : Serial No.
1	239A7-62111		PIPE,TILT	ﾊﾟｲﾌﾟ	1	
2	218G7-62061		HOSE,TILT,FRONT	ﾎｰｽ	2	
3	218G7-62071		HOSE,TILT,REAR	ﾎｰｽ	2	
4	239A7-62351		RUBBER,TILT-PIPE	ﾗﾊﾞｰ	1	
5	01183-08025		BOLT	ﾎﾞﾙﾄ	1	
6	239A7-62401		BRACKET,TILT-PIPE	ﾌﾞﾗｹｯﾄ	1	

FIG.163 HYDRAULIC LINE (TOR-CON)(G-TYPE:T-TYPE)

(F5017660) ﾊｲﾄﾞﾛﾘｯｸﾗｲﾝ(ﾄﾙｺﾝ)

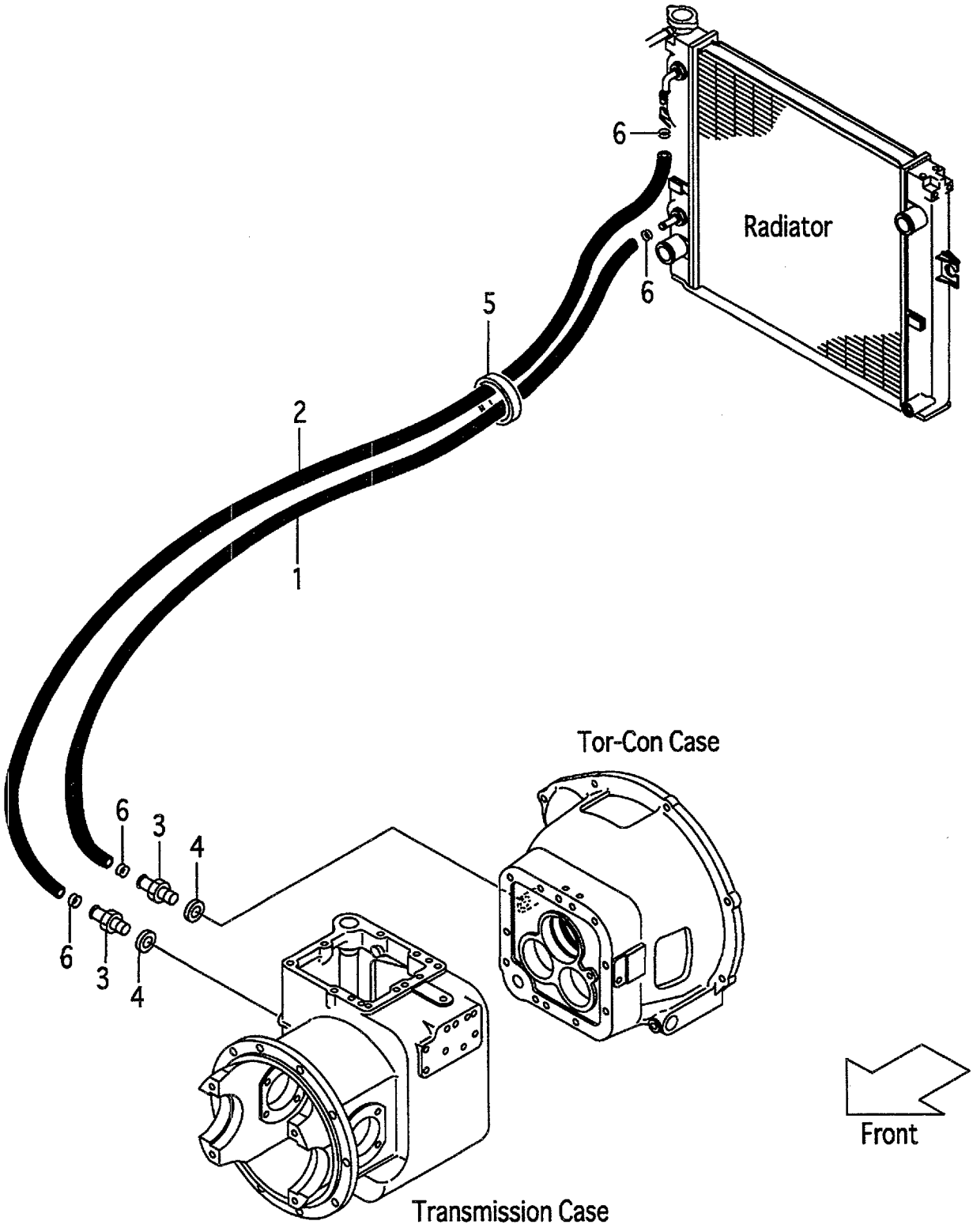

A:FG10T19 FG15T19 FG18T19

Item No	Part No.	Mark	Description	Req'd	Remarks : Serial No.
1	216H7-82101		HOSE,OIL-COOLER ﾎｰｽ	1	
2	216H7-82111		HOSE,OIL-COOLER ﾎｰｽ	1	
3	228U7-62221		NIPPLE ﾆｯﾌﾟﾙ	2	
4	20802-51301		PACKING ﾊﾟｯｷﾝｸﾞ	2	
5	04913-20380		BAND ﾊﾞﾝﾄﾞ	1	
6	25787-82081		CLIP ｸﾘｯﾌﾟ	4	

FIG.164 HYDRAULIC LINE (TOR-CON)(D-TYPE:T-TYPE)

(F5017670) ﾊｲﾄﾞﾛﾘｯｸﾗｲﾝ(ﾄﾙｺﾝ)

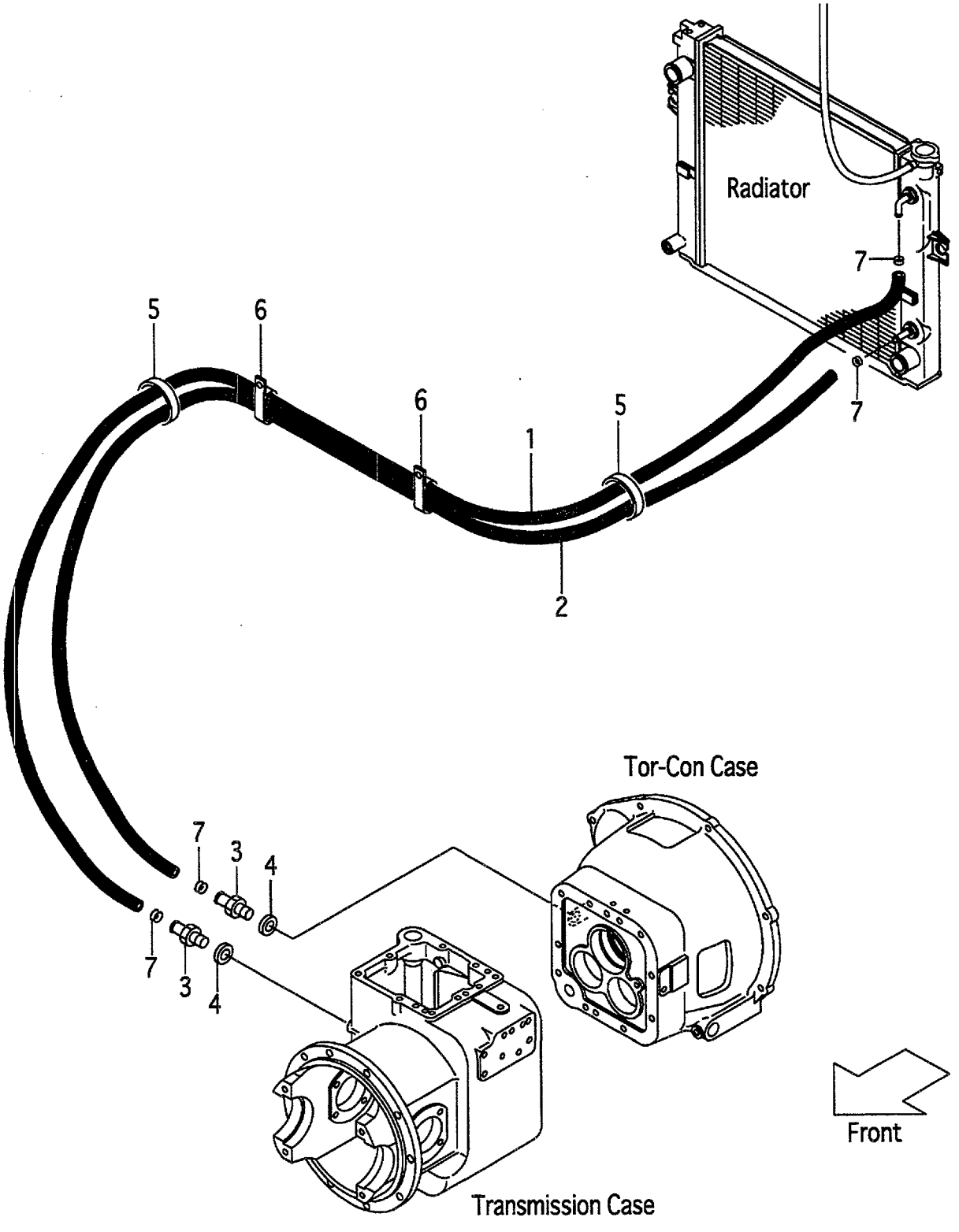

A:FD10T19 FD15T19 FD18T19

Item No	Part No.	Mark	Description	Req'd	Remarks : Serial No.
1	234B7-82101		HOSE,OIL-COOLER ﾎｰｽ	1	
2	234B7-82111		HOSE,OIL-COOLER ﾎｰｽ	1	
3	228U7-62221		NIPPLE ﾆｯﾌﾟﾙ	2	
4	20802-51301		PACKING ﾊﾟｯｷﾝｸﾞ	2	
5	04913-20380		BAND ﾊﾞﾝﾄﾞ	2	
6	25957-62201		CLIP ｸﾘｯﾌﾟ	2	
7	25787-82081		CLIP ｸﾘｯﾌﾟ	4	

FIG.165 TILT CYLINDER

(F5018510) ﾃｨﾙﾄｼﾘﾝﾀﾞｰ

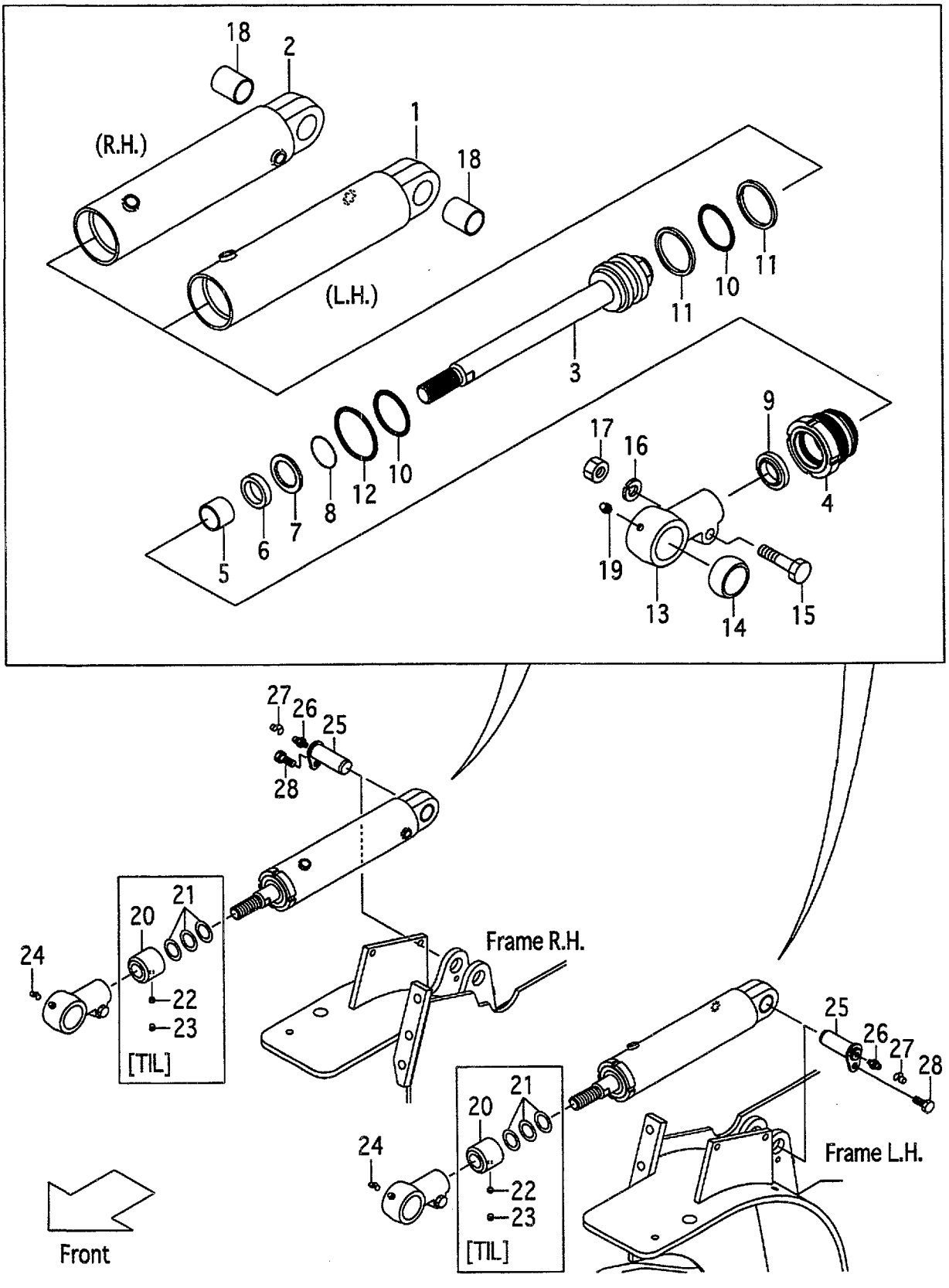

A:FG10C19 FG10T19 FG15C19 FG15T19 FG18C19 FG18T19
B:FD10C19 FD10T19 FD15C19 FD15T19 FD18C19 FD18T19

Item No	Part No.	Mark	Description		Req'd	Remarks : Serial No.
A1	216G8-50103		CYL-ASSY,TILT,LH	ﾃｨﾙﾄｼﾘﾝﾀﾞｱｯｾﾝ	1	INC.1,3-19
A2	216G8-50113		CYL-ASSY,TILT,RH	ﾃｨﾙﾄｼﾘﾝﾀﾞｱｯｾﾝ	1	INC.2-19
1	NO PART NO.	#*	TUBE,CYL,LH	ﾁｭｰﾌﾞ	1	
2	NO PART NO.	#*	TUBE,CYL,RH	ﾁｭｰﾌﾞ	1	
3	B-B6127-20412		ROD,PISTON	ﾛｯﾄﾞ	2	
4	NO PART NO.	#*	HEAD,CYL	ﾍｯﾄﾞ	2	
5	B-30131-03003	*	BUSHING	ﾌﾞｯｼﾝｸﾞ	2	
6	B-30961-03012	*	U-RING	Uﾘﾝｸﾞ	2	
7	B-30151-03006		SPACER	ｽﾍﾟｰｻ	2	
8	B-30141-35012		RING,SNAP	ｽﾅｯﾌﾟﾘﾝｸﾞ	2	
9	B-30191-30025	*	RING,WIPER	ﾘﾝｸﾞ	2	
10	B-95112-05500	*	O-RING	Oﾘﾝｸﾞ	4	
11	B-95713-05500	*	RING,BACK-UP	ﾘﾝｸﾞ	4	
12	B-95121-06500	*	O-RING	Oﾘﾝｸﾞ	2	
13	NO PART NO.	#*	HEAD,ROD	ﾍｯﾄﾞ	2	
14	B-30431-35009	*	BUSHING,PIN	ﾌﾞｯｼﾝｸﾞ	2	
15	B-B6341-01401		BOLT	ﾎﾞﾙﾄ	2	
16	B-30311-01403		WASHER	ﾜｯｼｬ	2	
17	B-B6351-01401		NUT	ﾅｯﾄ	2	
18	B-30421-30005	*	BUSHING,PIN	ﾌﾞｯｼﾝｸﾞ	2	
19	B-96111-10613		NIPPLE,GREASE	ﾆｯﾌﾟﾙ	2	
20	271J8-52102		SPACER,L=125	ｽﾍﾟｰｻ	2	[TIL013](3-3)
-	216G8-52342		SPACER,L=99	ｽﾍﾟｰｻ	2	[TIL014][TIL016](3-6,6-6)
-	216G8-52352		SPACER,L=66	ｽﾍﾟｰｻ	2	[TIL017](6-10)
21	23658-52101		SHIM	ｼﾑ	6	[TIL013][TIL014](3-3,3-6)
-	23658-52101		SHIM	ｼﾑ	6	[TIL016][TIL017](6-6,6-10)
22	01066-10012		SCREW,SET	ｽｸﾘｭｾｯﾄ	2	[TIL013][TIL014](3-3,3-6)
-	01066-10012		SCREW,SET	ｽｸﾘｭｾｯﾄ	2	[TIL016][TIL017](6-6,6-10)
23	23658-52401		PLUG,NYLON	ﾌﾟﾗｸﾞ	2	[TIL013][TIL014](3-3,3-6)
-	23658-52401		PLUG,NYLON	ﾌﾟﾗｸﾞ	2	[TIL016][TIL017](6-6,6-10)
24	22199-12401		CAP,NIPPLE	ｷｬｯﾌﾟ	2	
25	216G8-52201		PIN	ﾋﾟﾝ	2	
26	04901-00100		FITTING	ﾌｨｯﾃｨﾝｸﾞ	2	
27	22199-12401		CAP,NIPPLE	ｷｬｯﾌﾟ	2	
28	216G8-52301		BOLT & WASHER	ﾎﾞﾙﾄ&ﾜｯｼｬ	2	
K1	216G8-52501		KIT,REPAIR	ﾘﾍﾟｱｷｯﾄ	2	INC.6,9-12
K2	B-B665B-00033		KIT,CYL-TUBE,LH	ｼﾘﾝﾀﾞﾁｭｰﾌﾞｷｯﾄ	1	INC.1,18
K3	B-B665B-00034		KIT,CYL-TUBE,RH	ｼﾘﾝﾀﾞﾁｭｰﾌﾞｷｯﾄ	1	INC.2,18
K4	B-3065B-00211		KIT,ROD-HEAD	ﾛｯﾄﾞﾍｯﾄﾞｷｯﾄ	2	INC.13,14
K5	B-3065B-00139		KIT,CYL-HEAD	ｼﾘﾝﾀﾞﾍｯﾄﾞｷｯﾄ	2	INC.4,5

FIG.166 TILT BOOTS [TLB][FC]

(F5018520) ﾃｨﾙﾄﾌﾞｰﾂ

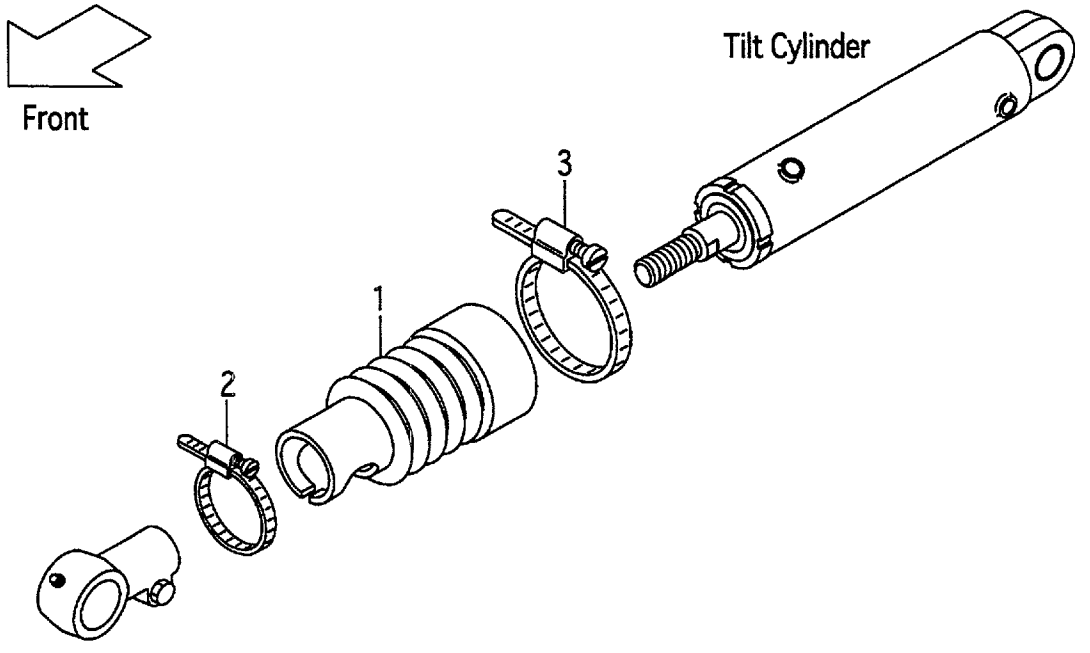

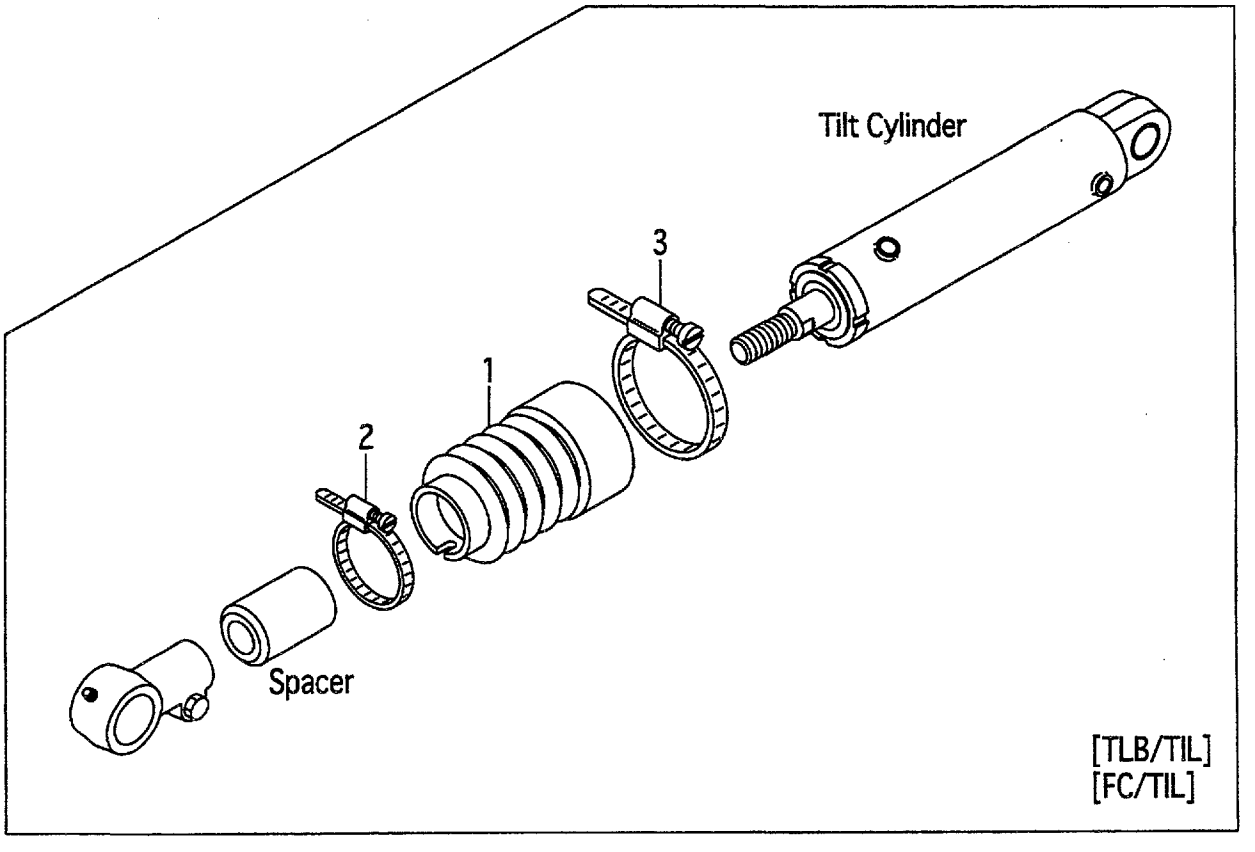

A:FG10C19 FG10T19 FG15C19 FG15T19 FG18C19 FG18T19
B:FD10C19 FD10T19 FD15C19 FD15T19 FD18C19 FD18T19

Item No	Part No.	Mark	Description		Req'd	Remarks : Serial No.
A1	216G8-51001		BOOT-ASSY,TILT-CYL	ﾌﾞｰﾂｱｯｾﾝ	2	[TLB][FC](6-12) INC.1-3
-	216G8-51011		BOOT-ASSY,TILT-CYL	ﾌﾞｰﾂｱｯｾﾝ	2	[TLB/TIL013&014](3-3,3-6) INC.1-3
-	216G8-51011		BOOT-ASSY,TILT-CYL	ﾌﾞｰﾂｱｯｾﾝ	2	[TLB/TIL016&017](6-6,6-10) INC.1-3
-	216G8-51011		BOOT-ASSY,TILT-CYL	ﾌﾞｰﾂｱｯｾﾝ	2	[FC/TIL013&014](3-3,3-6) INC.1-3
-	216G8-51011		BOOT-ASSY,TILT-CYL	ﾌﾞｰﾂｱｯｾﾝ	2	[FC/TIL016&017](6-6,6-10) INC.1-3
1	216G8-52251		BOOT,TILT-CYL	ﾌﾞｰﾂ	2	[TLB][FC](6-12)
-	216G8-52261		BOOT,TILT-CYL	ﾌﾞｰﾂ	2	[TLB/TIL013&014] [FC/TIL013&014](3-3,3-6)
-	216G8-52261		BOOT,TILT-CYL	ﾌﾞｰﾂ	2	[TLB/TIL016&017] [FC/TIL016&017](6-6,6-10)
2	216G8-53001		BAND,50	ﾊﾞﾝﾄﾞ	2	[TLB][FC](6-12)
-	216G8-53011		BAND,55	ﾊﾞﾝﾄﾞ	(2)	[TLB][FC](6-12)
-	216G8-53021		BAND,65	ﾊﾞﾝﾄﾞ	2	[TLB/TIL013&014] [FC/TIL013&014](3-3,3-6)
-	216G8-53031		BAND,70	ﾊﾞﾝﾄﾞ	(2)	[TLB/TIL013&014] [FC/TIL013&014](3-3,3-6)
-	216G8-53021		BAND,65	ﾊﾞﾝﾄﾞ	2	[TLB/TIL016&017] [FC/TIL016&017](6-6,6-10)
-	216G8-53031		BAND,70	ﾊﾞﾝﾄﾞ	(2)	[TLB/TIL016&017] [FC/TIL016&017](6-6,6-10)
3	216G8-53041		BAND,85	ﾊﾞﾝﾄﾞ	2	[TLB][FC]
-	216G8-53051		BAND,90	ﾊﾞﾝﾄﾞ	(2)	[TLB][FC]

FIG.167 DECAL (1/2)

(F5019110) ﾃﾞｶﾙ(1/2)

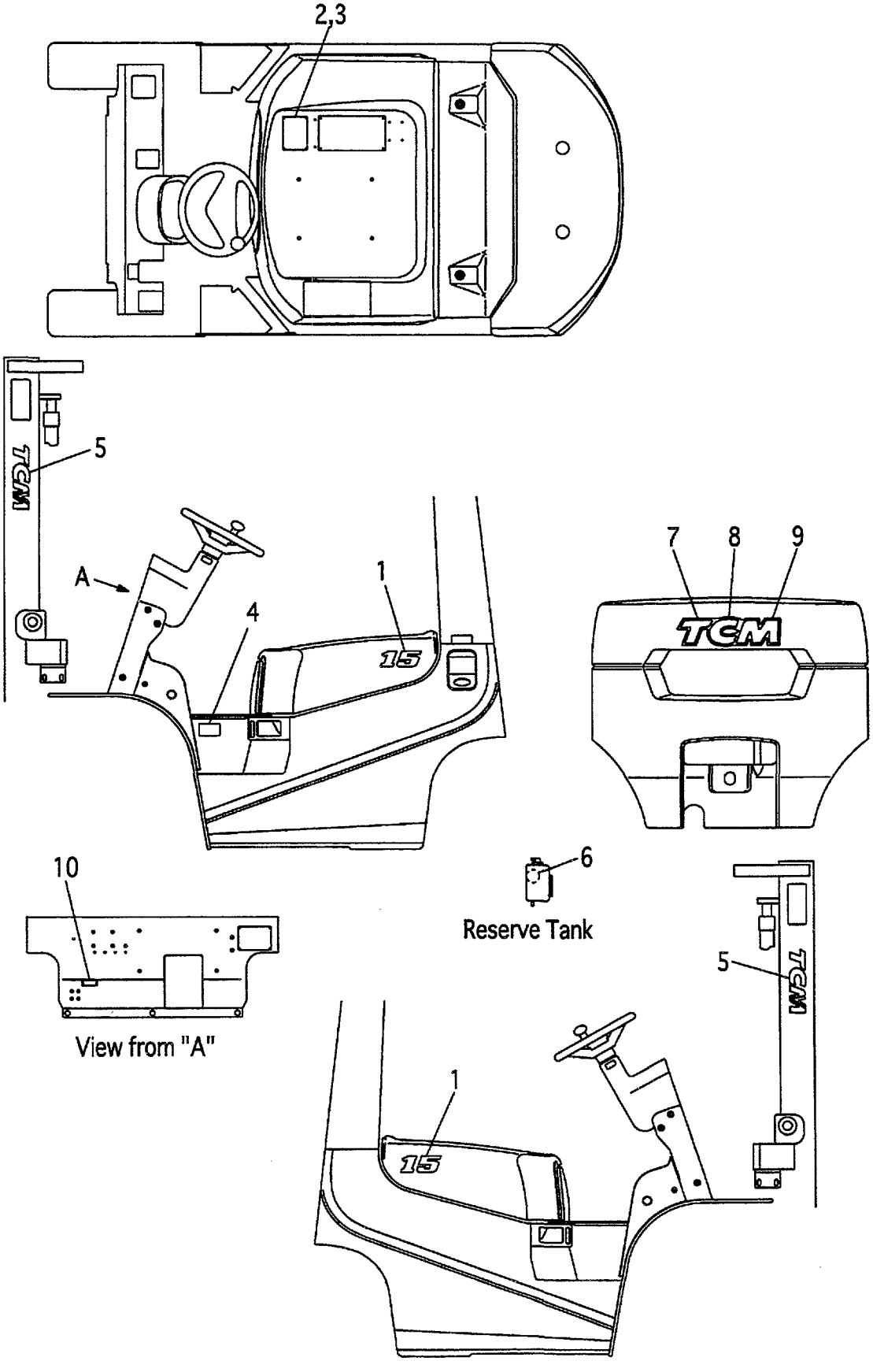

A:FG10C19 FG10T19 D:FD10C19 FD10T19
B:FG15C19 FG15T19 E:FD15C19 FD15T19
C:FG18C19 FG18T19 F:FD18C19 FD18T19

FIG.167
(F5019110)

Item No	Part No.	Mark	Description	Req'd	Remarks : Serial No.
1	218B9-12001		DECAL,MODEL-MARK,10 ﾃﾞｶﾙ	2	A,D
-	218G9-12001		DECAL,MODEL-MARK,15 ﾃﾞｶﾙ	2	B,E
-	218P9-12001		DECAL,MODEL-MARK,18 ﾃﾞｶﾙ	2	C,F
-	218B9-12011		DECAL,MODEL-MARK,10 ﾃﾞｶﾙ	2	A,D [PCL]
-	218G9-12011		DECAL,MODEL-MARK,15 ﾃﾞｶﾙ	2	B,E [PCL]
-	218P9-12011		DECAL,MODEL-MARK,18 ﾃﾞｶﾙ	2	C,F [PCL]
2	27389-12031		CHART,CAPACITY ﾁｬｰﾄ	1	A,D [VM200-500]
-	27389-12061		CHART,CAPACITY ﾁｬｰﾄ	1	A,D [VM550-600]
-	27399-12051		CHART,CAPACITY ﾁｬｰﾄ	1	B,E [VM200-500]
-	27399-12091		CHART,CAPACITY ﾁｬｰﾄ	1	C,F [VM550-600]
-	21279-12001		CHART,CAPACITY ﾁｬｰﾄ	1	B,E [VM200-500]
-	21279-12011		CHART,CAPACITY ﾁｬｰﾄ	1	C,F [VM550-600]
-	514A3-82331		CHART,CAPACITY ﾁｬｰﾄ	1	[EXB/SNP][EXE/SNP]
-	514A3-82341		CHART,CAPACITY ﾁｬｰﾄ	1	[EXB/FNP][EXE/FNP]
-	51192-82141		CHART,CAPACITY ﾁｬｰﾄ	1	A,D [VM200-500/EXB/CNP]
-	51192-82151		CHART,CAPACITY ﾁｬｰﾄ	1	A,D [VM550-600/EXB/CNP]
-	51232-82141		CHART,CAPACITY ﾁｬｰﾄ	1	B,E [VM200-500/EXB/CNP]
-	51232-82151		CHART,CAPACITY ﾁｬｰﾄ	1	B,E [VM550-600/EXB/CNP]
-	51272-82141		CHART,CAPACITY ﾁｬｰﾄ	1	C,F [VM200-500/EXB/CNP]
-	51272-82151		CHART,CAPACITY ﾁｬｰﾄ	1	C,F [VM550-600/EXB/CNP]
-	211R9-12011		CHART,CAPACITY ﾁｬｰﾄ	1	A,D [VM200-500/EXB/RNP]
-	211R9-12021		CHART,CAPACITY ﾁｬｰﾄ	1	A,D [VM550-600/EXB/RNP]
-	211S9-12011		CHART,CAPACITY ﾁｬｰﾄ	1	B,E [VM200-500/EXB/RNP]
-	211S9-12021		CHART,CAPACITY ﾁｬｰﾄ	1	B,E [VM550-600/EXB/RNP]
-	217Y9-12001		CHART,CAPACITY ﾁｬｰﾄ	1	C,F [VM200-500/EXB/RNP]
-	217Y9-12011		CHART,CAPACITY ﾁｬｰﾄ	1	C,F [VM550-600/EXB/RNP]
-	510B2-92001		CHART,CAPACITY ﾁｬｰﾄ	1	A,D [EXC]

FIG.167 DECAL (1/2)

(F5019110) ﾃﾞｶﾙ(1/2)

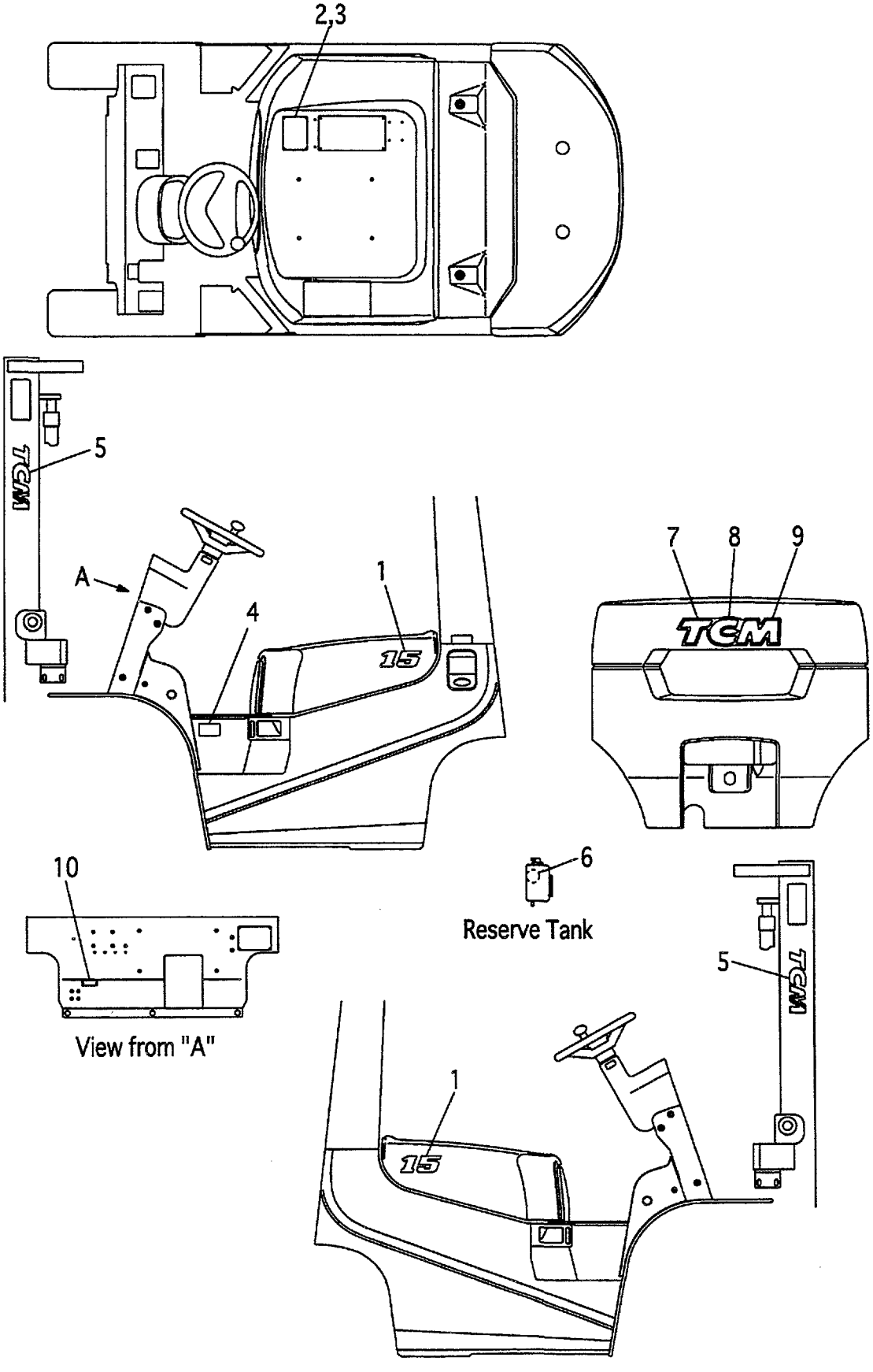

A:FG10C19 FG10T19 D:FD10C19 FD10T19
B:FG15C19 FG15T19 E:FD15C19 FD15T19
C:FG18C19 FG18T19 F:FD18C19 FD18T19

FIG.167
(F5019110)

Item No	Part No.	Mark	Description		Req'd	Remarks : Serial No.
-	510F2-92001		CHART,CAPACITY	ﾁｬｰﾄ	1	B,E [EXC]
-	510H2-92001		CHART,CAPACITY	ﾁｬｰﾄ	1	C,F [EXC]
-	514A3-82301		CHART,CAPACITY	ﾁｬｰﾄ	1	[EXE][EXN]
-	514A3-82321		CHART,CAPACITY	ﾁｬｰﾄ	1	[EXE/TNP]
-	514A3-82351		CHART,CAPACITY	ﾁｬｰﾄ	1	[EXE/ONP]
-	514A3-82361		CHART,CAPACITY	ﾁｬｰﾄ	1	[EXE/DNP]
-	514A3-82371		CHART,CAPACITY	ﾁｬｰﾄ	1	[EXE/INP]
-	514A3-82381		CHART,CAPACITY	ﾁｬｰﾄ	1	[EXE/GNP]
-	514A3-82391		CHART,CAPACITY	ﾁｬｰﾄ	1	[EXE/PNP]
-	529F3-82111		CHART,CAPACITY	ﾁｬｰﾄ	1	[EXN/SENP]
-	529F3-82101		CHART,CAPACITY	ﾁｬｰﾄ	1	[EXN/FINP]
3	02432-01008		RIVET	ﾘﾍﾞｯﾄ	4	
4	216G9-12142		DECAL,AIR-PRESSURE	ﾃﾞｶﾙ	1	
-	217U9-12002		DECAL,AIR-PRESSURE	ﾃﾞｶﾙ	1	[EXB/RNP]
5	273A9-12242		DECAL,TCM	ﾃﾞｶﾙ	2	
6	23659-12101		DECAL,L/LIFE-COOLANT	ﾃﾞｶﾙ	1	
-	522A3-82641		DECAL,L/LIFE-COOLANT	ﾃﾞｶﾙ	1	[EXB/SNP][EXE/SNP]
-	522A3-82841		DECAL,L/LIFE-COOLANT	ﾃﾞｶﾙ	1	[EXB/FNP][EXE/FNP]
-	232W9-12051		DECAL,L/LIFE-COOLANT	ﾃﾞｶﾙ	1	[EXB/RNP]
-	522A3-82441		DECAL,L/LIFE-COOLANT	ﾃﾞｶﾙ	1	[EXE/TNP]
-	522A3-83041		DECAL,L/LIFE-COOLANT	ﾃﾞｶﾙ	1	[EXE/ONP]
-	522A3-83241		DECAL,L/LIFE-COOLANT	ﾃﾞｶﾙ	1	[EXE/DNP]
-	522A3-83441		DECAL,L/LIFE-COOLANT	ﾃﾞｶﾙ	1	[EXE/INP]
-	522A3-83641		DECAL,L/LIFE-COOLANT	ﾃﾞｶﾙ	1	[EXE/GNP]
-	522A3-83841		DECAL,L/LIFE-COOLANT	ﾃﾞｶﾙ	1	[EXE/PNP]
-	529F3-82091		DECAL,L/LIFE-COOLANT	ﾃﾞｶﾙ	1	[EXN/SENP]
-	529F3-82081		DECAL,L/LIFE-COOLANT	ﾃﾞｶﾙ	1	[EXN/FINP]
7	216G9-12013		DECAL,B/WEIGHT,T	ﾃﾞｶﾙ	1	
8	216G9-12023		DECAL,B/WEIGHT,C	ﾃﾞｶﾙ	1	
9	216G9-12033		DECAL,B/WEIGHT,M	ﾃﾞｶﾙ	1	
10	218G9-92101		PLATE,LICENCE	ﾌﾟﾚｰﾄ	1	A,B,C
-	219G9-92101		PLATE,LICENCE	ﾌﾟﾚｰﾄ	1	D,E,F

FIG.168 DECAL (2/2)

(F5019120) ﾃﾞｶﾙ(2/2)

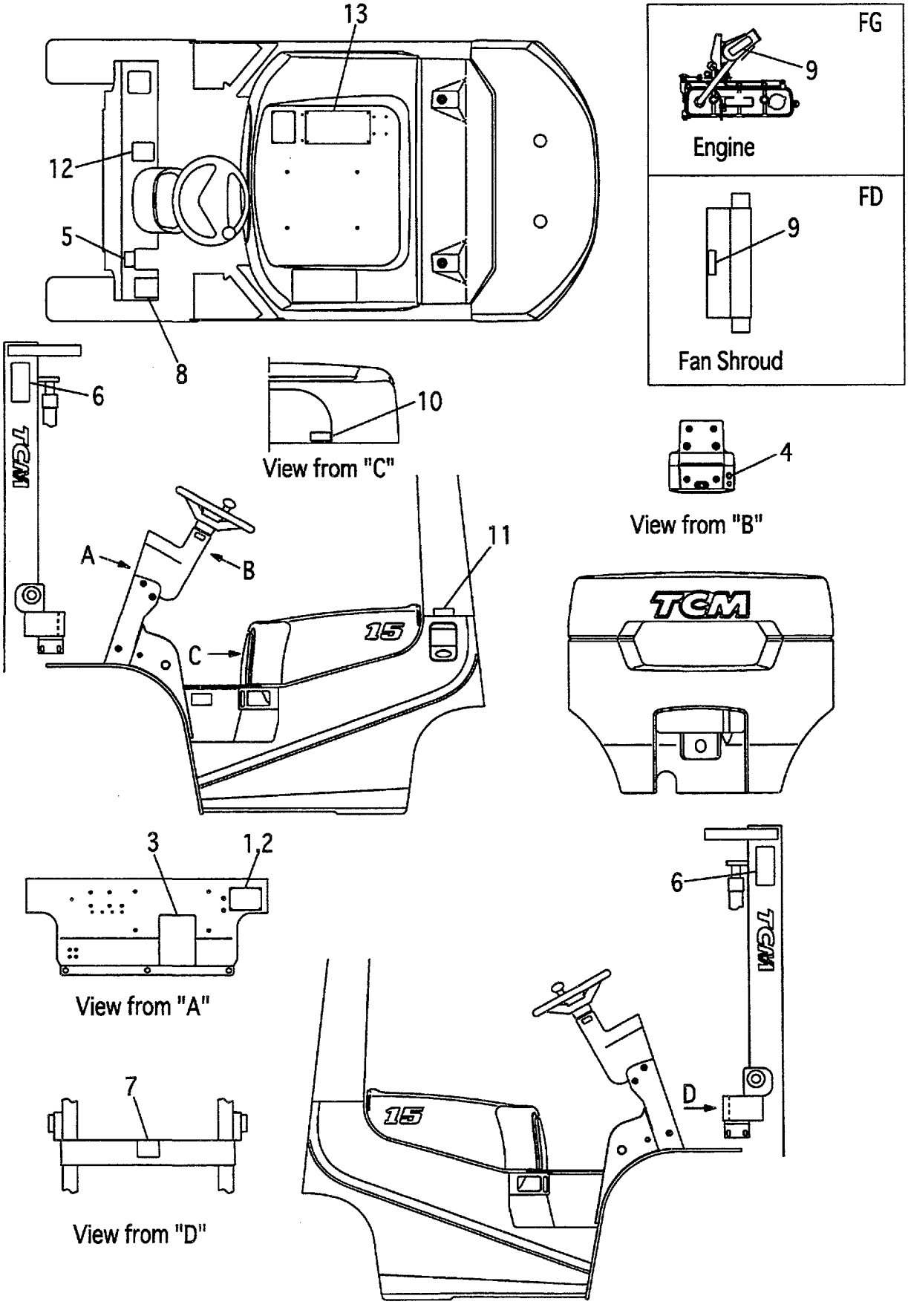

A:FG10C19 FG10T19 FG15C19 FG15T19 FG18C19 FG18T19
B:FD10C19 FD10T19 FD15C19 FD15T19 FD18C19 FD18T19

Item No	Part No.	Mark	Description	Req'd	Remarks : Serial No.
1	216G9-10101		PLATE,NAME プレート	1	
2	216G9-12131		RIVET リベット	4	
3	25789-12051		DECAL,LUBRICATION デカル	1	
4	216G9-12071		DECAL,STARTER-SWITCH デカル	1	
5	214A5-53012		DECAL,BRAKE-LEVER デカル	1	
6	27419-12062		DECAL,MAST-CAUTION デカル	2	
7	27419-12072		DECAL,CROSS-BEAM デカル	1	
8	216G9-12062		DECAL,TIRE-CAUTION デカル	1	
9	216G9-12052		DECAL,FAN-CAUTION デカル	1	
10	218G9-12071		DECAL,CAPACITY デカル	1	
11	21239-12501		DECAL,GASOLINE デカル	1	A
-	21159-12501		DECAL,LIGHT-OIL デカル	1	B
12	271A9-12251		DECAL,CAUTION デカル	1	
13	23659-12054		DECAL,WARNING-PLATE デカル	1	(OLD PART)
-	239A9-12301		DECAL,WARNING-PLATE デカル	1	(NEW PART)

FIG.169 DECAL (2/2)[EXB]

(F50191B0) デカル(2/2)

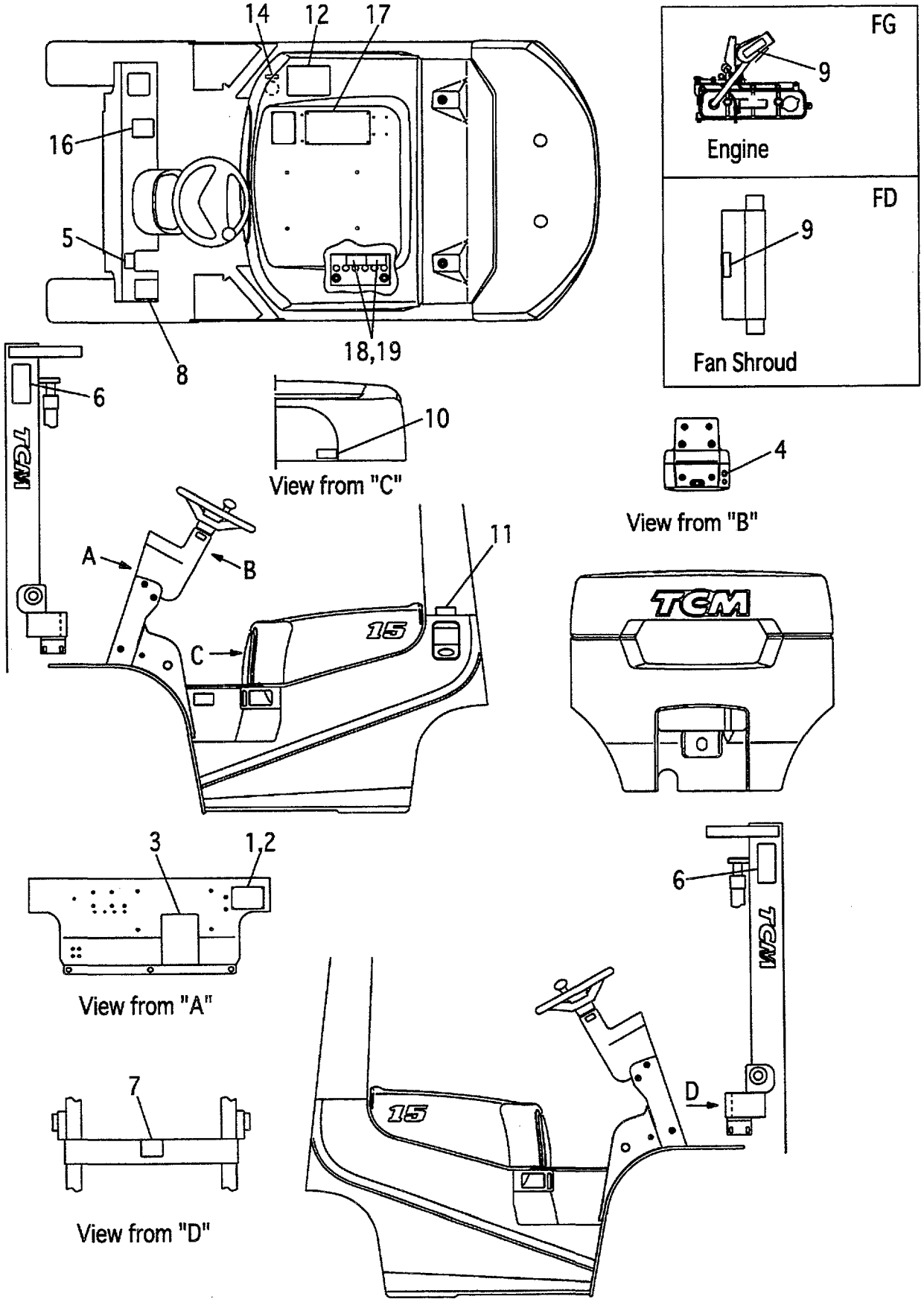

A:FG10C19 FG10T19 FG15C19 FG15T19 FG18C19 FG18T19
B:FD10C19 FD10T19 FD15C19 FD15T19 FD18C19 FD18T19

Item No	Part No.	Mark	Description		Req'd	Remarks : Serial No.
1	516G3-82402		PLATE,NAME	ﾌﾟﾚｰﾄ	1	[EXB]
-	516G2-82011		PLATE,NAME	ﾌﾟﾚｰﾄ	1	[EXB/SNP]
-	516G2-82021		PLATE,NAME	ﾌﾟﾚｰﾄ	1	[EXB/FNP]
-	516G2-82031		PLATE,NAME	ﾌﾟﾚｰﾄ	1	[EXB/CNP]
-	232W9-10101		PLATE,NAME	ﾌﾟﾚｰﾄ	1	[EXB/RNP]
2	216G9-12131		RIVET	ﾘﾍﾞｯﾄ	4	[EXB]
3	52672-72122		CHART,LUBRICATION	ﾁｬｰﾄ	1	[EXB]
-	53652-82352		CHART,LUBRICATION	ﾁｬｰﾄ	1	[EXB/SNP]
-	22959-12052		CHART,LUBRICATION	ﾁｬｰﾄ	1	[EXB/FNP]
-	52672-82062		CHART,LUBRICATION	ﾁｬｰﾄ	1	[EXB/CNP]
-	225R9-12031		CHART,LUBRICATION	ﾁｬｰﾄ	1	[EXB/RNP]
4	216G9-12071		DECAL,STARTER-SWITCH	ﾃﾞｶﾙ	1	[EXB]
-	516G3-82011		DECAL,STARTER-SWITCH	ﾃﾞｶﾙ	1	[EXB/SNP]
-	232W9-12001		DECAL,STARTER-SWITCH	ﾃﾞｶﾙ	1	[EXB/RNP]
5	514A3-82002		DECAL,BRAKE-LEVER	ﾃﾞｶﾙ	1	[EXB]
-	514A3-82012		DECAL,BRAKE-LEVER	ﾃﾞｶﾙ	1	[EXB/SNP]
-	514A3-82022		DECAL,BRAKE-LEVER	ﾃﾞｶﾙ	1	[EXB/FNP]
-	514A2-82012		DECAL,BRAKE-LEVER	ﾃﾞｶﾙ	1	[EXB/CNP]
-	225R9-12112		DECAL,BRAKE-LEVER	ﾃﾞｶﾙ	1	[EXB/RNP]
6	27419-12061		DECAL,MAST-CAUTION	ﾃﾞｶﾙ	2	[EXB]
-	27419-12062		DECAL,MAST-CAUTION	ﾃﾞｶﾙ	2	[EXB/RNP]
7	27419-12071		DECAL,CROSS-BEAM	ﾃﾞｶﾙ	1	[EXB]
-	27419-12072		DECAL,CROSS-BEAM	ﾃﾞｶﾙ	1	[EXB/RNP]
8	516G2-72711		DECAL,TIRE-CAUTION	ﾃﾞｶﾙ	1	[EXB]
-	516G3-82211		DECAL,TIRE-CAUTION	ﾃﾞｶﾙ	1	[EXB/SNP]
-	516G3-82221		DECAL,TIRE-CAUTION	ﾃﾞｶﾙ	1	[EXB/FNP]
-	516G2-82061		DECAL,TIRE-CAUTION	ﾃﾞｶﾙ	1	[EXB/CNP]
-	232W9-12021		DECAL,TIRE-CAUTION	ﾃﾞｶﾙ	1	[EXB/RNP]
9	516G2-72701		DECAL,FAN-CAUTION	ﾃﾞｶﾙ	1	[EXB]
-	516G3-82111		DECAL,FAN-CAUTION	ﾃﾞｶﾙ	1	[EXB/SNP]
-	516G3-82121		DECAL,FAN-CAUTION	ﾃﾞｶﾙ	1	[EXB/FNP]
-	516G2-82051		DECAL,FAN-CAUTION	ﾃﾞｶﾙ	1	[EXB/CNP]
-	232W9-12011		DECAL,FAN-CAUTION	ﾃﾞｶﾙ	1	[EXB/RNP]
10	518G2-82181		DECAL,CAPACITY	ﾃﾞｶﾙ	1	[EXB]
-	518H3-82001		DECAL,CAPACITY	ﾃﾞｶﾙ	1	[EXB/SNP]
-	518H3-82011		DECAL,CAPACITY	ﾃﾞｶﾙ	1	[EXB/FNP]
-	518G2-82281		DECAL,CAPACITY	ﾃﾞｶﾙ	1	[EXB/CNP]
-	219W9-12071		DECAL,CAPACITY	ﾃﾞｶﾙ	1	[EXB/RNP]
11	51232-82001		DECAL,GASOLINE	ﾃﾞｶﾙ	1	A [EXB]
-	522A2-72111		DECAL,LIGHT-OIL	ﾃﾞｶﾙ	1	B [EXB]
-	51232-82021		DECAL,GASOLINE	ﾃﾞｶﾙ	1	A [EXB/SNP]
-	51152-82022		DECAL,LIGHT-OIL	ﾃﾞｶﾙ	1	B [EXB/SNP]
-	51232-82011		DECAL,GASOLINE	ﾃﾞｶﾙ	1	A [EXB/FNP]
-	51152-82012		DECAL,LIGHT-OIL	ﾃﾞｶﾙ	1	B [EXB/FNP]

FIG.169 DECAL (2/2)[EXB]

(F50191B0) デカル(2/2)

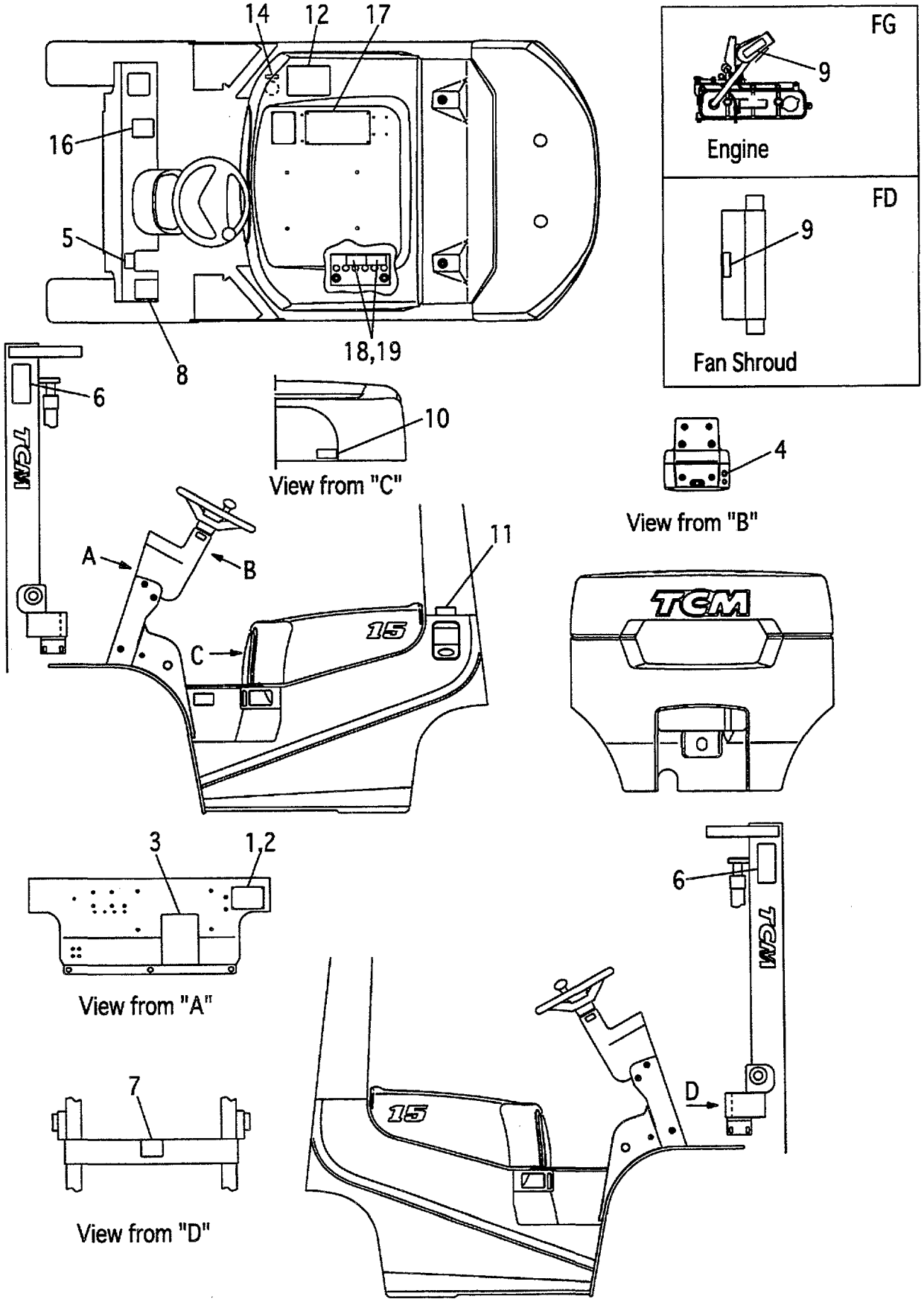

A:FG10C19 FG10T19 FG15C19 FG15T19 FG18C19 FG18T19
B:FD10C19 FD10T19 FD15C19 FD15T19 FD18C19 FD18T19

Item No	Part No.	Mark	Description	Req'd	Remarks : Serial No.
-	51232-82032		DECAL,GASOLINE デカル	1	A [EXB/CNP]
-	522A2-82151		DECAL,LIGHT-OIL デカル	1	B [EXB/CNP]
-	536G2-82021		DECAL,GASOLINE デカル	1	A [EXB/RNP]
-	225R9-12001		DECAL,LIGHT-OIL デカル	1	B [EXB/RNP]
12	53652-82551		DECAL,CAUTION デカル	1	[EXB/CNP]
13	225R9-12091	+	DECAL,BATTERY-SWITCH デカル	1	[EXB/RNP]
14	53652-82401		DECAL,OIL デカル	1	[EXB/SNP]
-	53652-82011		DECAL,OIL デカル	1	[EXB/FNP]
-	53652-82541		DECAL,OIL デカル	1	[EXB/CNP]
-	225R9-12071		DECAL,HYDRAULIC-OIL デカル	1	[EXB/RNP]
15	225R9-12081	+	DECAL,I10519 デカル	1	[EXB/RNP]
16	571A3-82361		DECAL,CAUTION デカル	1	[EXB]
17	516G3-82801		DECAL,CAUTION デカル	1	[EXB]
-	516G3-82821		DECAL,CAUTION デカル	1	[EXB/SNP]
-	516G3-82831		DECAL,CAUTION デカル	1	[EXB/FNP]
-	52672-82073		DECAL,WARNING-PLATE デカル	1	[EXB/CNP]
-	225R9-12052		DECAL,CAUTION デカル	1	[EXB/RNP]
18	534A3-82311		DECAL,BATTERY,A デカル	1	[EXB]
-	534A3-82331		DECAL,BATTERY,A デカル	1	[EXB/SNP]
-	534A3-82341		DECAL,BATTERY,A デカル	1	[EXB/FNP]
-	534A3-82531		DECAL,BATTERY デカル	1	[EXB/CNP]
-	232W9-12101		DECAL,BATTERY,A デカル	1	[EXB/RNP]
19	534A3-82421		DECAL,BATTERY,B デカル	1	[EXB](WITHOUT EXB/CNP)
-	534A3-82441		DECAL,BATTERY,B デカル	1	[EXB/SNP]
-	534A3-82451		DECAL,BATTERY,B デカル	1	[EXB/FNP]
-	232W9-12111		DECAL,BATTERY,B デカル	1	[EXB/RNP]
20	55592-82001	+	DECAL,CERTIFICATE デカル	1	[EXB]

FIG.170 DECAL (2/2)[EXC]

(F50191C0) ﾃﾞｶﾙ(2/2)

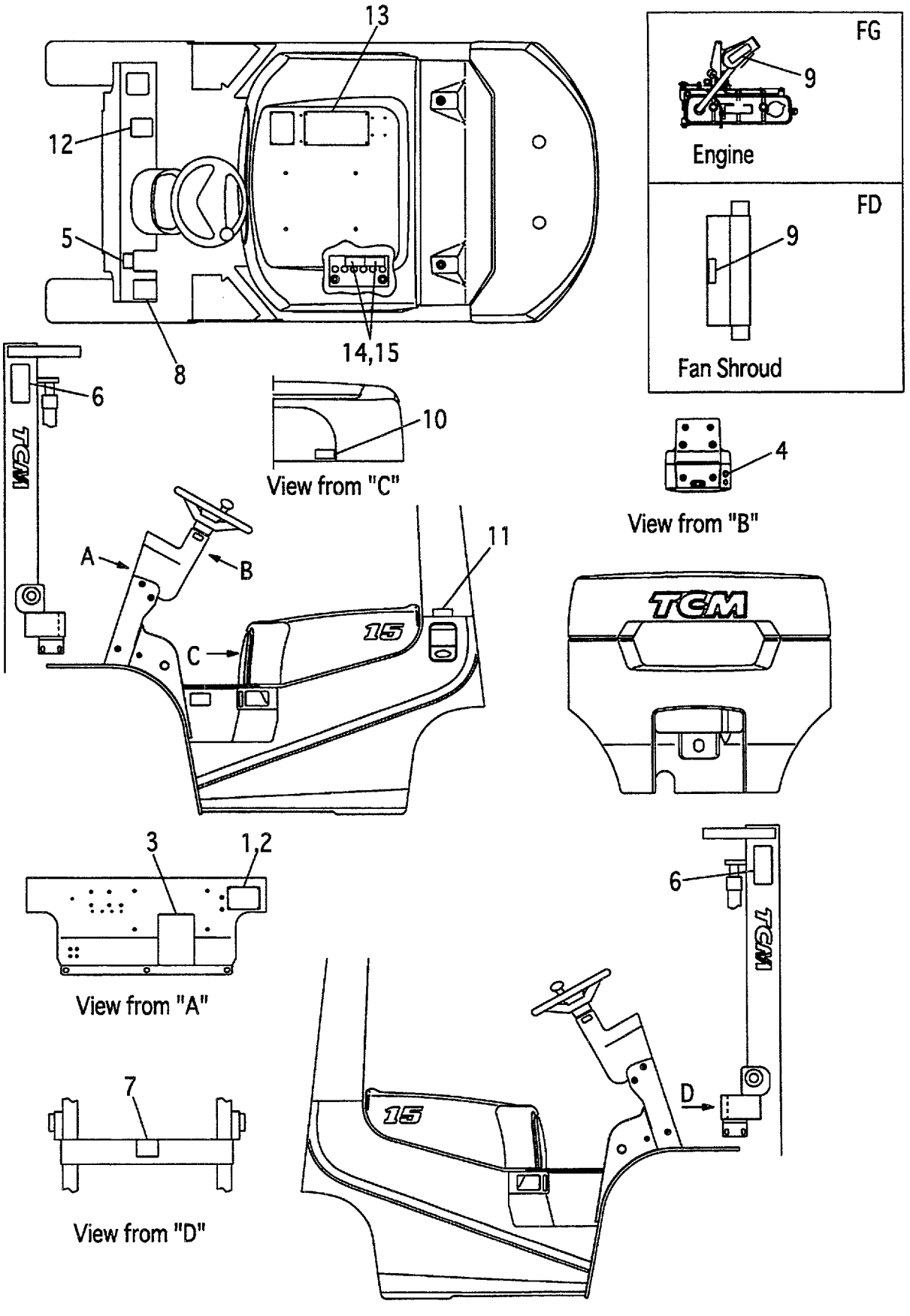

A:FG10C19 FG10T19 FG15C19 FG15T19 FG18C19 FG18T19
B:FD10C19 FD10T19 FD15C19 FD15T19 FD18C19 FD18T19

Item No	Part No.	Mark	Description	Req'd	Remarks : Serial No.
1	516G3-82402		PLATE,NAME プレート	1	[EXC]
2	216G9-12131		RIVET リベット	4	[EXC]
3	52672-72122		CHART,LUBRICATION チャート	1	[EXC]
4	216G9-12071		DECAL,STARTER-SWITCH デカル	1	[EXC]
5	514A3-82002		DECAL,BRAKE-LEVER デカル	1	[EXC]
6	27419-12061		DECAL,MAST-CAUTION デカル	2	[EXC]
7	27419-12071		DECAL,CROSS-BEAM デカル	1	[EXC]
8	516G2-72711		DECAL,TIRE-CAUTION デカル	1	[EXC]
9	516G2-72701		DECAL,FAN-CAUTION デカル	1	[EXC]
10	518G2-82181		DECAL,CAPACITY デカル	1	[EXC]
11	51232-82001		DECAL,GASOLINE デカル	1	A [EXC]
-	522A2-72111		DECAL,LIGHT-OIL デカル	1	B [EXC]
12	571A3-82361		DECAL,CAUTION デカル	1	[EXC]
13	516G3-82801		DECAL,CAUTION デカル	1	[EXC]
14	534A3-82311		DECAL,BATTERY,A デカル	1	[EXC]
15	534A3-82421		DECAL,BATTERY,B デカル	1	[EXC]
16	55592-82001	+	DECAL,CERTIFICATE デカル	1	[EXC]

FIG.171 DECAL (2/2)[EXE]

(F50191E0) ﾃﾞｶﾙ(2/2)

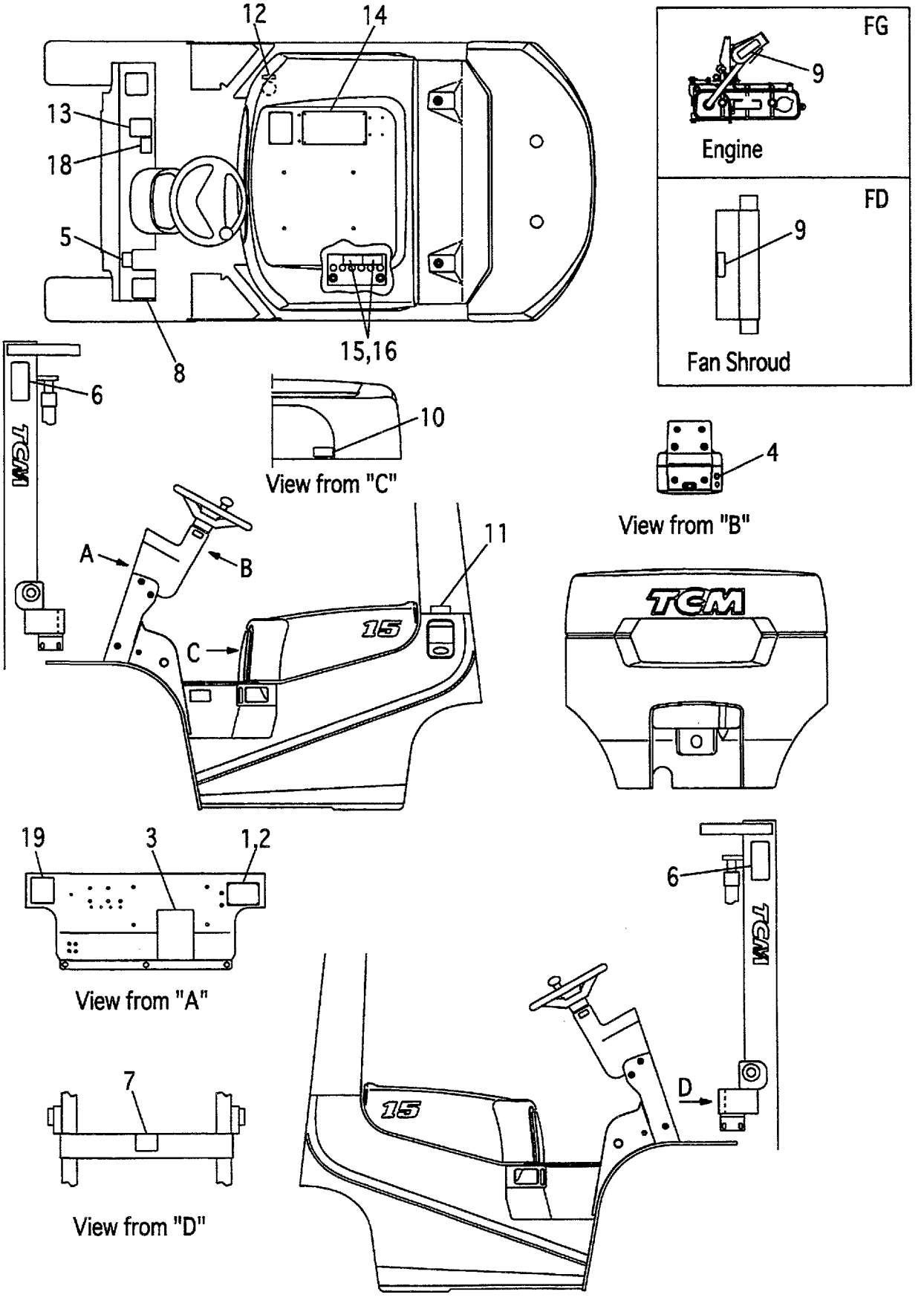

A:FG10C19 FG15C19 FG18C19 C:FD10C19 FD15C19 FD18C19
B:FG10T19 FG15T19 FG18T19 D:FD10T19 FD15T19 FD18T19

Item No	Part No.	Mark	Description	Req'd	Remarks : Serial No.
1	516G2-82001		PLATE,NAME プレート	1	[EXE]
-	516G3-82312		PLATE,NAME プレート	1	[EXE/SNP]
-	516G3-82322		PLATE,NAME プレート	1	[EXE/FNP]
-	516G3-82302		PLATE,NAME プレート	1	[EXE/TNP]
-	516G3-82332		PLATE,NAME プレート	1	[EXE/ONP]
-	516G3-82342		PLATE,NAME プレート	1	[EXE/DNP]
-	516G3-82352		PLATE,NAME プレート	1	[EXE/INP]
-	516G3-82362		PLATE,NAME プレート	1	[EXE/GNP]
-	516G3-82372		PLATE,NAME プレート	1	[EXE/PNP]
2	216G9-12131		RIVET リベット	4	[EXE]
3	52672-72122		CHART,LUBRICATION チャート	1	[EXE]
-	53652-82352		CHART,LUBRICATION チャート	1	[EXE/SNP]
-	22959-12052		CHART,LUBRICATION チャート	1	[EXE/FNP]
-	55953-02032		CHART,LUBRICATION チャート	1	[EXE/TNP]
-	522A3-83081		CHART,LUBRICATION チャート	1	[EXE/ONP]
-	522A3-83281		CHART,LUBRICATION チャート	1	[EXE/DNP]
-	522A3-83481		CHART,LUBRICATION チャート	1	[EXE/INP]
-	522A3-83681		CHART,LUBRICATION チャート	1	[EXE/GNP]
-	522A3-83881		CHART,LUBRICATION チャート	1	[EXE/PNP]
4	216G9-12071		DECAL,STARTER-SWITCH デカル	1	[EXE]
-	516G3-82011		DECAL,STARTER-SWITCH デカル	1	[EXE/SNP]
-	516G3-82001		DECAL,STARTER-SWITCH デカル	1	[EXE/TNP]
-	516G3-82021		DECAL,STARTER-SWITCH デカル	1	[EXE/ONP]
-	516G3-82031		DECAL,STARTER-SWITCH デカル	1	[EXE/DNP]
-	516G3-82041		DECAL,STARTER-SWITCH デカル	1	[EXE/INP]
-	516G3-82051		DECAL,STARTER-SWITCH デカル	1	[EXE/GNP]
5	514A3-82002		DECAL,BRAKE-LEVER デカル	1	[EXE]
-	514A3-82012		DECAL,BRAKE-LEVER デカル	1	[EXE/SNP]
-	514A3-82022		DECAL,BRAKE-LEVER デカル	1	[EXE/FNP]
-	514A3-02002		DECAL,BRAKE-LEVER デカル	1	[EXE/TNP]
-	514A3-82032		DECAL,BRAKE-LEVER デカル	1	[EXE/ONP]
-	514A3-82042		DECAL,BRAKE-LEVER デカル	1	[EXE/DNP]
-	514A3-82052		DECAL,BRAKE-LEVER デカル	1	[EXE/INP]
-	514A3-82062		DECAL,BRAKE-LEVER デカル	1	[EXE/GNP]
-	514A3-82072		DECAL,BRAKE-LEVER デカル	1	[EXE/PNP]
6	27419-12061		DECAL,MAST-CAUTION デカル	2	[EXE]
7	27419-12071		DECAL,CROSS-BEAM デカル	1	[EXE]
8	516G2-72711		DECAL,TIRE-CAUTION デカル	1	[EXE]
-	516G3-82211		DECAL,TIRE-CAUTION デカル	1	[EXE/SNP]
-	516G3-82221		DECAL,TIRE-CAUTION デカル	1	[EXE/FNP]
-	516G3-82201		DECAL,TIRE-CAUTION デカル	1	[EXE/TNP]
-	516G3-82232		DECAL,TIRE-CAUTION デカル	1	[EXE/ONP]
-	516G3-82241		DECAL,TIRE-CAUTION デカル	1	[EXE/DNP]
-	516G3-82251		DECAL,TIRE-CAUTION デカル	1	[EXE/INP]
-	516G3-82261		DECAL,TIRE-CAUTION デカル	1	[EXE/GNP]
-	516G3-82271		DECAL,TIRE-CAUTION デカル	1	[EXE/PNP]
9	516G2-72701		DECAL,FAN-CAUTION デカル	1	[EXE]
-	516G3-82111		DECAL,FAN-CAUTION デカル	1	[EXE/SNP]
-	516G3-82121		DECAL,FAN-CAUTION デカル	1	[EXE/FNP]
-	516G3-82101		DECAL,FAN-CAUTION デカル	1	[EXE/TNP]

FIG.171 DECAL (2/2)[EXE]

(F50191E0) ﾃﾞｶﾙ(2/2)

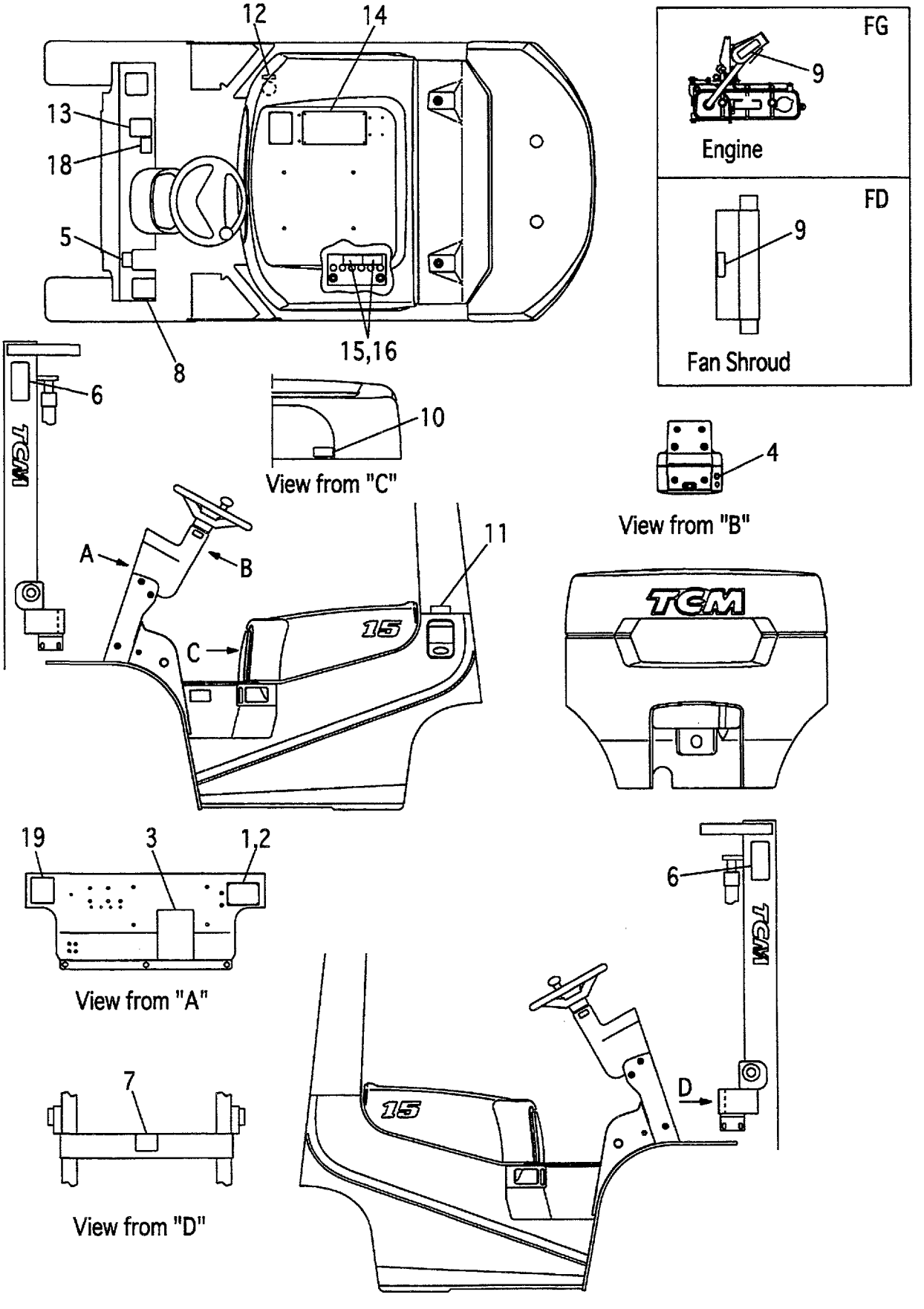

A:FG10C19 FG15C19 FG18C19 C:FD10C19 FD15C19 FD18C19
B:FG10T19 FG15T19 FG18T19 D:FD10T19 FD15T19 FD18T19

Item No	Part No.	Mark	Description	Req'd	Remarks : Serial No.
-	516G3-82131		DECAL,FAN-CAUTION デカル	1	[EXE/ONP]
-	516G3-82141		DECAL,FAN-CAUTION デカル	1	[EXE/DNP]
-	516G3-82151		DECAL,FAN-CAUTION デカル	1	[EXE/INP]
-	516G3-82161		DECAL,FAN-CAUTION デカル	1	[EXE/GNP]
-	516G3-82171		DECAL,FAN-CAUTION デカル	1	[EXE/PNP]
10	518G2-82181		DECAL,CAPACITY デカル	1	[EXE]
-	518H3-82001		DECAL,CAPACITY デカル	1	[EXE/SNP]
-	518H3-82011		DECAL,CAPACITY デカル	1	[EXE/FNP]
-	518H3-82021		DECAL,CAPACITY デカル	1	[EXE/TNP]
-	518H3-82031		DECAL,CAPACITY デカル	1	[EXE/ONP]
-	518H3-82041		DECAL,CAPACITY デカル	1	[EXE/DNP]
-	518H3-82051		DECAL,CAPACITY デカル	1	[EXE/INP]
-	518H3-82061		DECAL,CAPACITY デカル	1	[EXE/GNP]
-	518H3-82071		DECAL,CAPACITY デカル	1	[EXE/PNP]
11	51232-82001		DECAL,GASOLINE デカル	1	A,B [EXE]
-	522A2-72111		DECAL,LIGHT-OIL デカル	1	C,D [EXE]
-	51232-82021		DECAL,GASOLINE デカル	1	A,B [EXE/SNP]
-	51152-82022		DECAL,LIGHT-OIL デカル	1	C,D [EXE/SNP]
-	51232-82011		DECAL,GASOLINE デカル	1	A,B [EXE/FNP]
-	51152-82012		DECAL,LIGHT-OIL デカル	1	C,D [EXE/FNP]
-	51233-02011		DECAL,GASOLINE デカル	1	A,B [EXE/TNP]
-	51153-02001		DECAL,LIGHT-OIL デカル	1	C,D [EXE/TNP]
-	51233-83021		DECAL,GASOLINE デカル	1	A,B [EXE/ONP]
-	522A3-83021		DECAL,LIGHT-OIL デカル	1	C,D [EXE/ONP]
-	51233-83221		DECAL,GASOLINE デカル	1	A,B [EXE/DNP]
-	522A3-83221		DECAL,LIGHT-OIL デカル	1	C,D [EXE/DNP]
-	51233-83421		DECAL,GASOLINE デカル	1	A,B [EXE/INP]
-	522A3-83421		DECAL,LIGHT-OIL デカル	1	C,D [EXE/INP]
-	51233-83621		DECAL,GASOLINE デカル	1	A,B [EXE/GNP]
-	522A3-83621		DECAL,LIGHT-OIL デカル	1	C,D [EXE/GNP]
-	51233-83821		DECAL,GASOLINE デカル	1	A,B [EXE/PNP]
-	522A3-83821		DECAL,LIGHT-OIL デカル	1	C,D [EXE/PNP]

FIG.171 DECAL (2/2)[EXE]

(F50191E0) ﾃﾞｶﾙ(2/2)

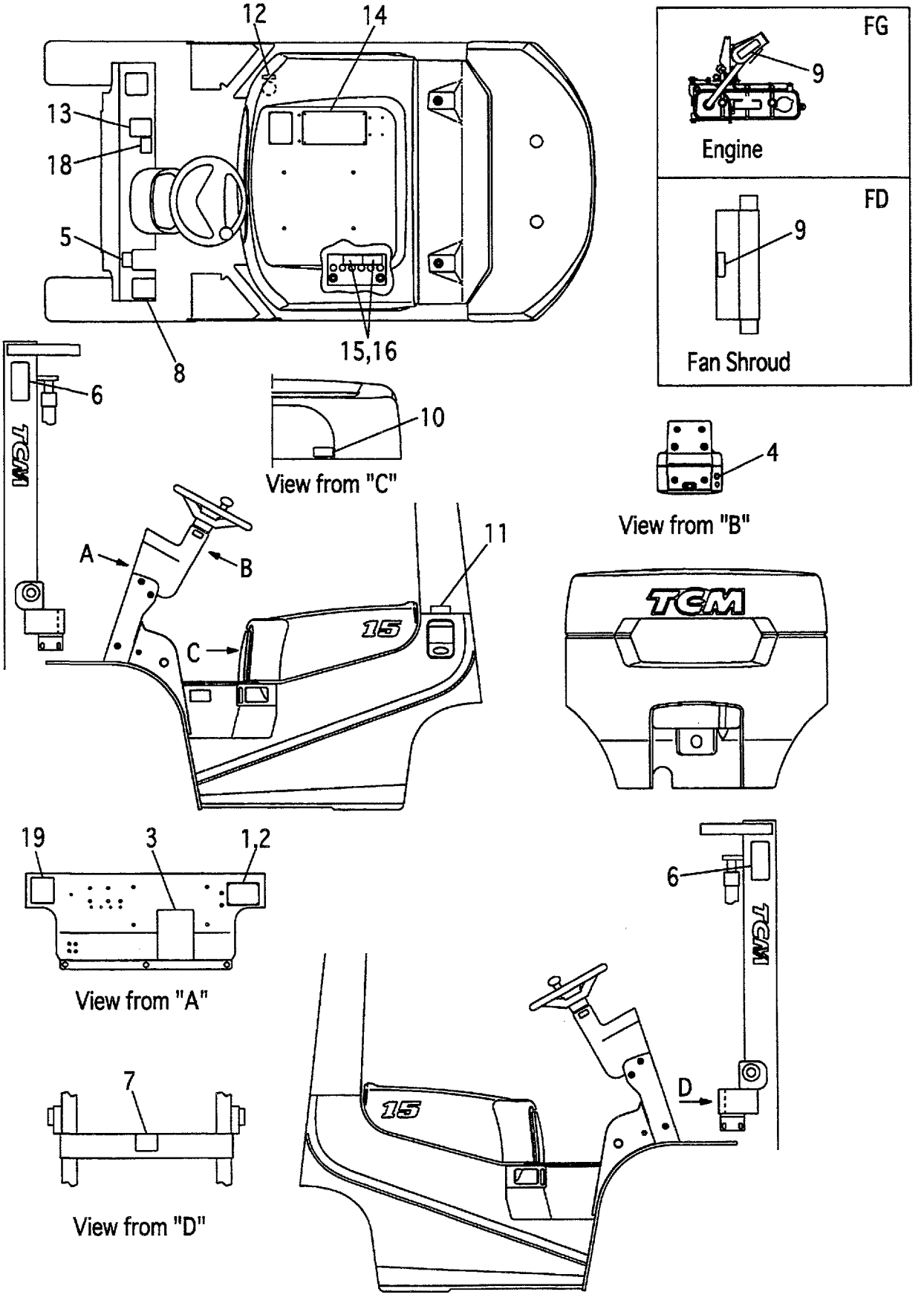

A:FG10C19 FG15C19 FG18C19 C:FD10C19 FD15C19 FD18C19
B:FG10T19 FG15T19 FG18T19 D:FD10T19 FD15T19 FD18T19

Item No	Part No.	Mark	Description	Req'd	Remarks : Serial No.
12	53652-82401		DECAL,OIL デカル	1	[EXE/SNP]
-	53652-82011		DECAL,OIL デカル	1	[EXE/FNP]
-	51233-02021		DECAL,OIL デカル	1	[EXE/TNP]
-	522A3-83061		DECAL,OIL デカル	1	[EXE/ONP][EXE/DNP]
-	522A3-83461		DECAL,OIL デカル	1	[EXE/INP]
-	522A3-83661		DECAL,OIL デカル	1	[EXE/GNP]
-	522A3-83861		DECAL,OIL デカル	1	[EXE/PNP]
13	571A3-82361		DECAL,CAUTION デカル	1	[EXE]
14	516G3-82801		DECAL,CAUTION デカル	1	[EXE]
-	516G3-82821		DECAL,CAUTION デカル	1	[EXE/SNP]
-	516G3-82831		DECAL,CAUTION デカル	1	[EXE/FNP]
-	516G3-82811		DECAL,CAUTION デカル	1	[EXE/TNP]
-	516G3-82841		DECAL,CAUTION デカル	1	[EXE/ONP]
-	516G3-82851		DECAL,CAUTION デカル	1	[EXE/DNP]
-	516G3-82861		DECAL,CAUTION デカル	1	[EXE/INP]
-	516G3-82871		DECAL,CAUTION デカル	1	[EXE/GNP]
-	516G3-82881		DECAL,CAUTION デカル	1	[EXE/PNP]
15	534A3-82311		DECAL,BATTERY,A デカル	1	[EXE]
-	534A3-82331		DECAL,BATTERY,A デカル	1	[EXE/SNP]
-	534A3-82341		DECAL,BATTERY,A デカル	1	[EXE/FNP]
-	534A3-82321		DECAL,BATTERY,A デカル	1	[EXE/TNP]
-	534A3-82351		DECAL,BATTERY,A デカル	1	[EXE/ONP]
-	534A3-82361		DECAL,BATTERY,A デカル	1	[EXE/DNP]
-	534A3-82371		DECAL,BATTERY,A デカル	1	[EXE/INP]
-	534A3-82381		DECAL,BATTERY,A デカル	1	[EXE/GNP]
-	534A3-82391		DECAL,BATTERY,A デカル	1	[EXE/PNP]
16	534A3-82421		DECAL,BATTERY,B デカル	1	[EXE]
-	534A3-82441		DECAL,BATTERY,B デカル	1	[EXE/SNP]
-	534A3-82451		DECAL,BATTERY,B デカル	1	[EXE/FNP]
-	534A3-82431		DECAL,BATTERY,B デカル	1	[EXE/TNP]
-	534A3-82461		DECAL,BATTERY,B デカル	1	[EXE/ONP]
-	534A3-82471		DECAL,BATTERY,B デカル	1	[EXE/DNP]
-	534A3-82481		DECAL,BATTERY,B デカル	1	[EXE/INP]
-	534A3-82491		DECAL,BATTERY,B デカル	1	[EXE/GNP]
-	534A3-82501		DECAL,BATTERY,B デカル	1	[EXE/PNP]
17	55592-82001	+	DECAL,CERTIFICATE デカル	1	[EXE]
18	535H3-82411		DECAL,CREEP-CAUTION デカル	1	B,D [EXE]
-	535H3-82421		DECAL,CREEP-CAUTION デカル	1	B,D [EXE/SNP]
-	535H3-82431		DECAL,CREEP-CAUTION デカル	1	B,D [EXE/FNP]
-	535H3-82441		DECAL,CREEP-CAUTION デカル	1	B,D [EXE/TNP]
-	535H3-82451		DECAL,CREEP-CAUTION デカル	1	B,D [EXE/ONP]
-	535H3-82461		DECAL,CREEP-CAUTION デカル	1	B,D [EXE/DNP]
-	535H3-82471		DECAL,CREEP-CAUTION デカル	1	B,D [EXE/INP]

FIG.171 DECAL (2/2)[EXE]

(F50191E0) ﾃﾞｶﾙ(2/2)

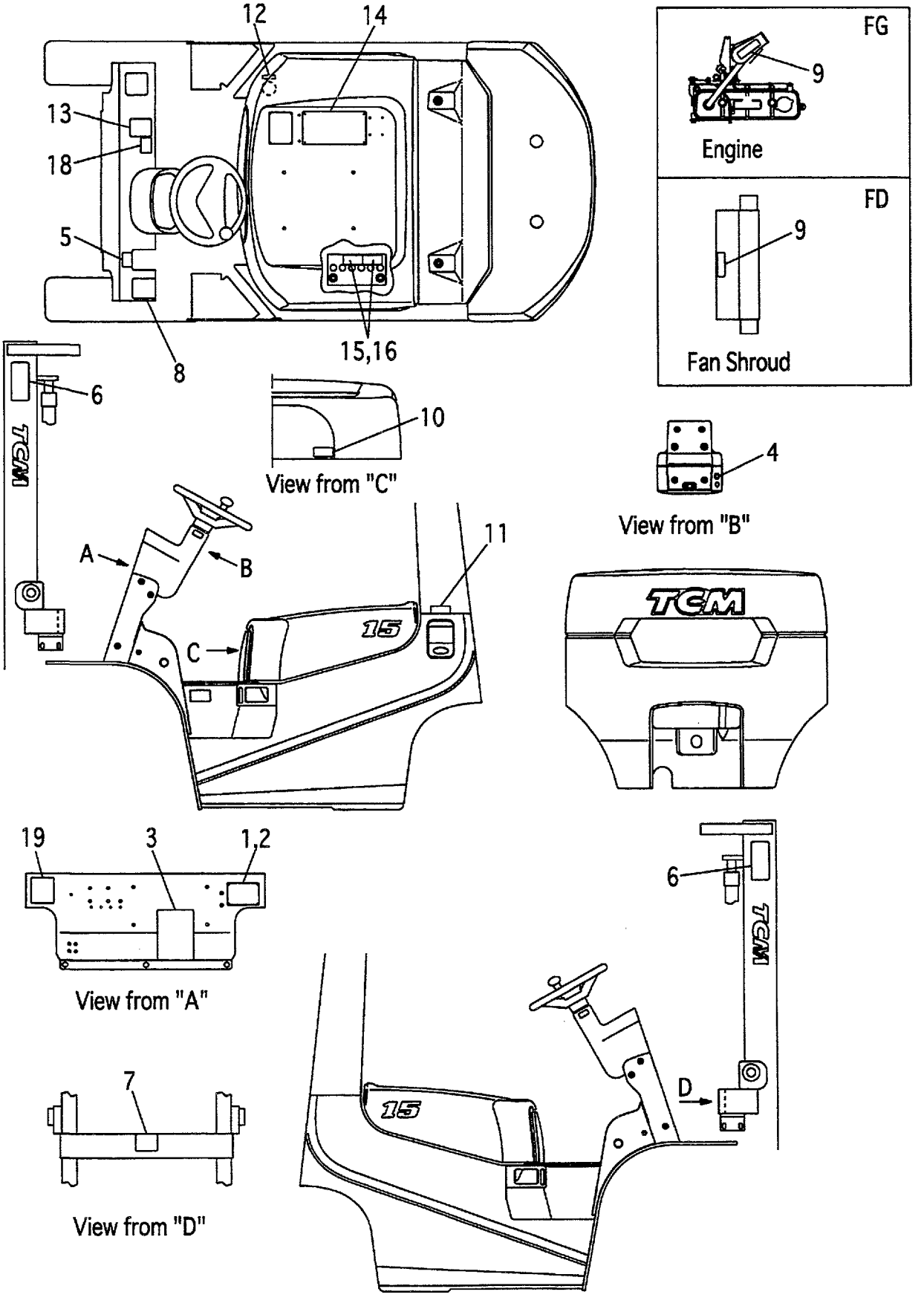

A:FG10C19 FG15C19 FG18C19 C:FD10C19 FD15C19 FD18C19
B:FG10T19 FG15T19 FG18T19 D:FD10T19 FD15T19 FD18T19

Item No	Part No.	Mark	Description	Req'd	Remarks : Serial No.
-	535H3-82481		DECAL,CREEP-CAUTION デカル	1	B,D [EXE/GNP]
-	535H3-82491		DECAL,CREEP-CAUTION デカル	1	B,D [EXE/PNP]
19	535E3-82211		DECAL,EC-SOUND デカル	1	A,B:10323- [EXE]

FIG.172 DECAL (2/2)[EXK]

(F50191K0) ﾃﾞｶﾙ(2/2)

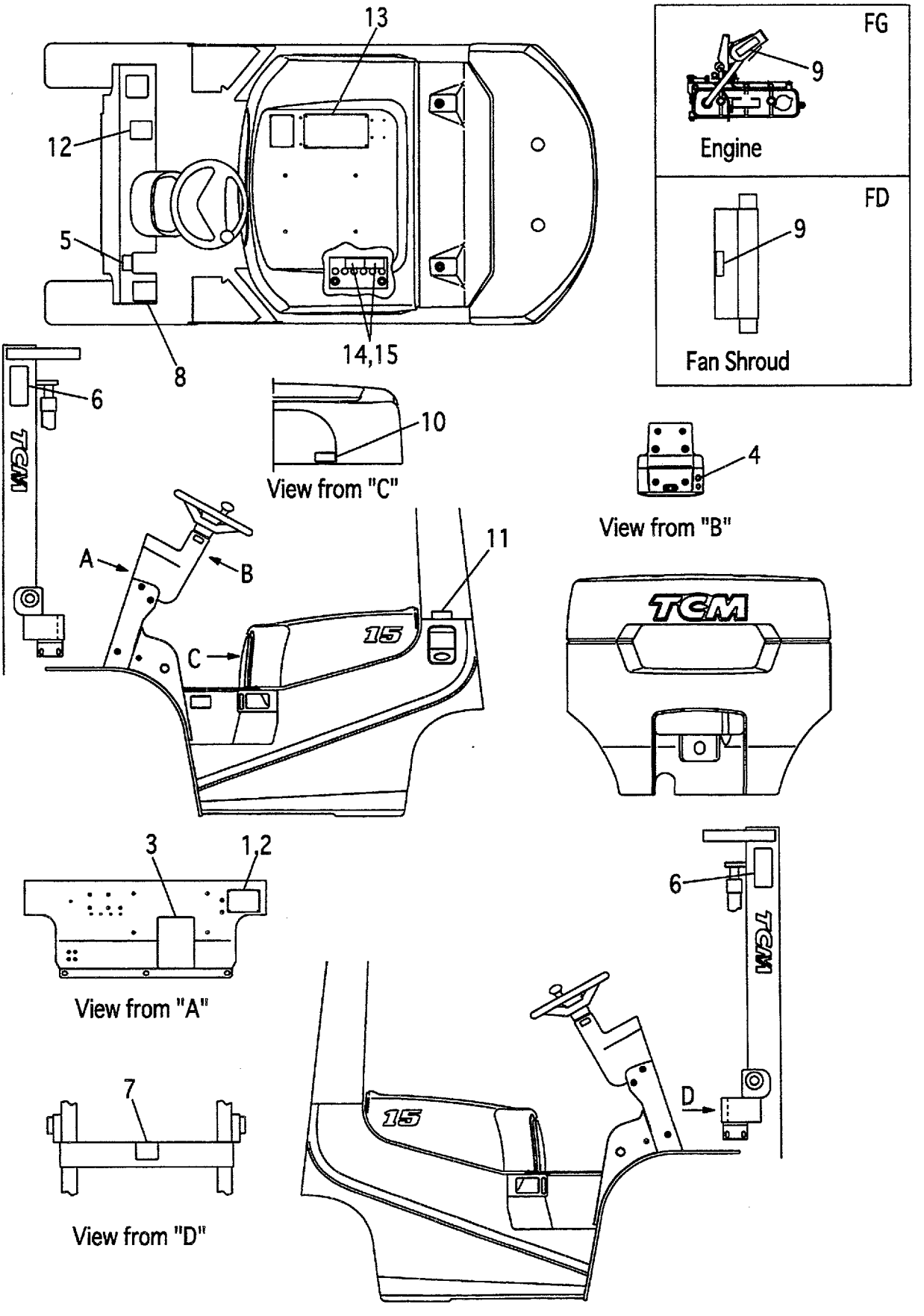

A:FG10C19 FG10T19 FG15C19 FG15T19 FG18C19 FG18T19
B:FD10C19 FD10T19 FD15C19 FD15T19 FD18C19 FD18T19

Item No	Part No.	Mark	Description		Req'd	Remarks : Serial No.
1	516G3-82402		PLATE,NAME	ﾌﾟﾚｰﾄ	1	[EXK]
2	216G9-12131		RIVET	ﾘﾍﾞｯﾄ	4	[EXK]
3	52672-72122		CHART,LUBRICATION	ﾁｬｰﾄ	1	[EXK]
4	216G9-12071		DECAL,I10665	ﾃﾞｶﾙ	1	[EXK]
5	514A3-82002		DECAL,BRAKE-LEVER	ﾃﾞｶﾙ	1	[EXK]
6	27419-12061		DECAL,MAST-CAUTION	ﾃﾞｶﾙ	2	[EXK]
7	27419-12071		DECAL,CROSS-BEAM	ﾃﾞｶﾙ	1	[EXK]
8	516G2-72711		DECAL,TIRE-CAUTION	ﾃﾞｶﾙ	1	[EXK]
9	516G2-72701		DECAL,FAN-CAUTION	ﾃﾞｶﾙ	1	[EXK]
10	518G2-82181		DECAL,CAPACITY	ﾃﾞｶﾙ	1	[EXK]
11	51232-82001		DECAL,GASOLINE	ﾃﾞｶﾙ	1	A [EXK]
-	522A2-72111		DECAL,LIGHT-OIL	ﾃﾞｶﾙ	1	B [EXK]
12	571A3-82361		DECAL,CAUTION	ﾃﾞｶﾙ	1	[EXK]
13	516G3-82801		DECAL,CAUTION	ﾃﾞｶﾙ	1	[EXK]
14	534A3-82311		DECAL,BATTERY,A	ﾃﾞｶﾙ	1	[EXK]
15	534A3-82421		DECAL,BATTERY,B	ﾃﾞｶﾙ	1	[EXK]
16	55592-82001	+	DECAL,CERTIFICATE	ﾃﾞｶﾙ	1	[EXK]

FIG.173 DECAL (2/2)[EXN]

(F50191N0) ﾃﾞｶﾙ(2/2)

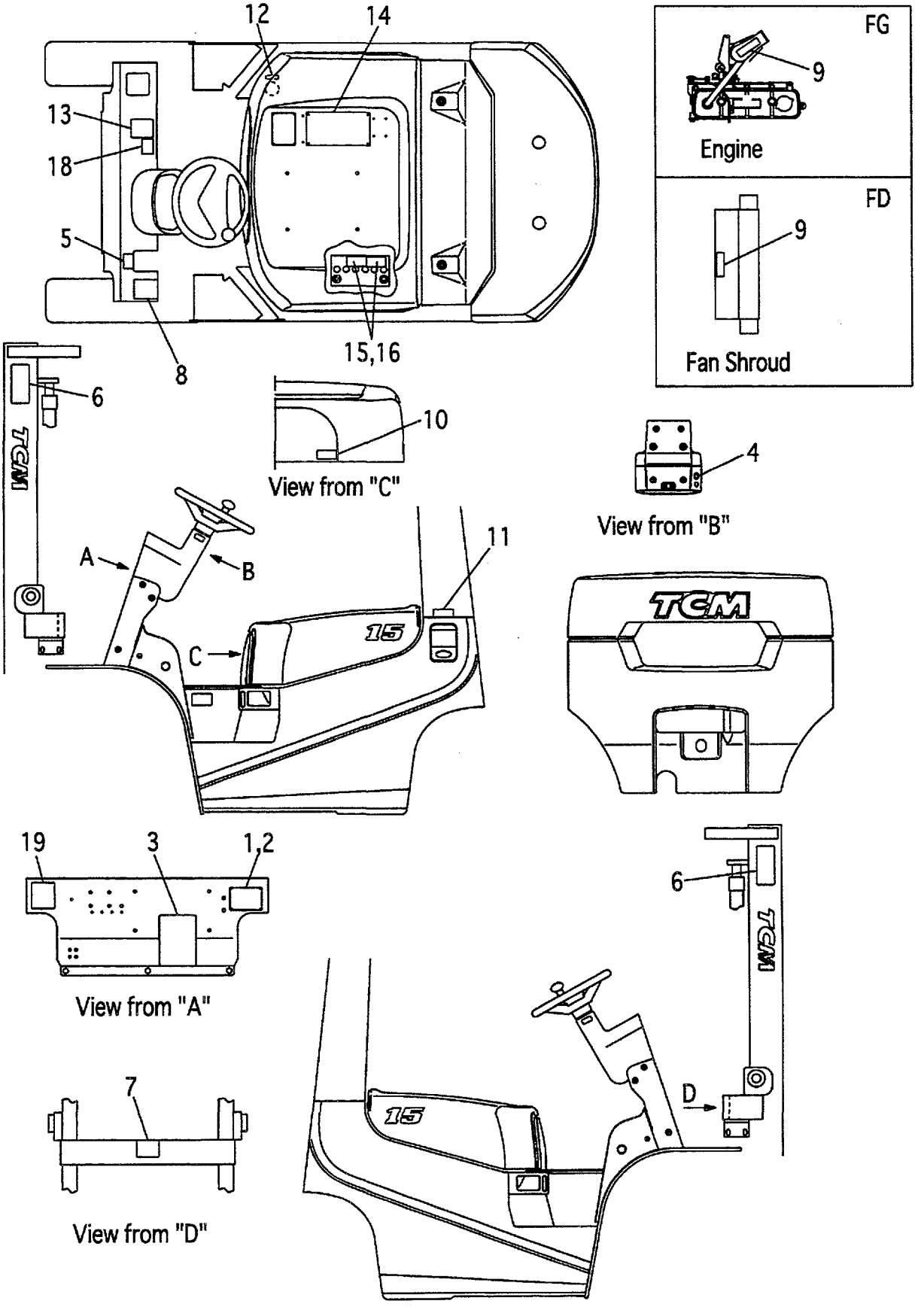

A:FG10C19 FG15C19 FG18C19 C:FD10C19 FD15C19 FD18C19
B:FG10T19 FG15T19 FG18T19 D:FD10T19 FD15T19 FD18T19

Item No	Part No.	Mark	Description	Req'd	Remarks : Serial No.
1	516G2-82001		PLATE,NAME プレート	1	[EXN]
-	516G3-82392		PLATE,NAME プレート	1	[EXN/SENP]
-	516G3-82382		PLATE,NAME プレート	1	[EXN/FINP]
2	216G9-12131		RIVET リベット	4	[EXN]
3	52672-72122		CHART,LUBRICATION チャート	1	[EXN]
-	529F3-82171		CHART,LUBRICATION チャート	1	[EXN/SENP]
-	529F3-82161		CHART,LUBRICATION チャート	1	[EXN/FINP]
4	216G9-12071		DECAL,STARTER-SWITCH デカル	1	[EXN]
-	516G3-82071		DECAL,STARTER-SWITCH デカル	1	[EXN/SENP]
-	516G3-82061		DECAL,STARTER-SWITCH デカル	1	[EXN/FINP]
5	514A3-82002		DECAL,BRAKE-LEVER デカル	1	[EXN]
-	529F3-82252		DECAL,BRAKE-LEVER デカル	1	[EXN/SENP]
-	529F3-82242		DECAL,BRAKE-LEVER デカル	1	[EXN/FINP]
6	27419-12061		DECAL,MAST-CAUTION デカル	2	[EXN]
7	27419-12071		DECAL,CROSS-BEAM デカル	1	[EXN]
8	516G2-72711		DECAL,TIRE-CAUTION デカル	1	[EXN]
-	516G3-82291		DECAL,TIRE-CAUTION デカル	1	[EXN/SENP]
-	516G3-82281		DECAL,TIRE-CAUTION デカル	1	[EXN/FINP]
9	516G2-72701		DECAL,FAN-CAUTION デカル	1	[EXN]
-	516G3-82191		DECAL,FAN-CAUTION デカル	1	[EXN/SENP]
-	516G3-82181		DECAL,FAN-CAUTION デカル	1	[EXN/FINP]
10	518G2-82181		DECAL,CAPACITY デカル	1	[EXN]
-	518H3-82091		DECAL,CAPACITY デカル	1	[EXN/SENP]
-	518H3-82081		DECAL,CAPACITY デカル	1	[EXN/FINP]
11	51232-82001		DECAL,GASOLINE デカル	1	A,B [EXN]
-	522A2-72111		DECAL,LIGHT-OIL デカル	1	C,D [EXN]
-	528F3-82031		DECAL,GASOLINE デカル	1	A,B [EXN/SENP]
-	529F3-82051		DECAL,LIGHT-OIL デカル	1	C,D [EXN/SENP]
-	528F3-82021		DECAL,GASOLINE デカル	1	A,B [EXN/FINP]
-	529F3-82041		DECAL,LIGHT-OIL デカル	1	C,D [EXN/FINP]
12	529F3-82071		DECAL,OIL デカル	1	[EXN/SENP]
-	529F3-82061		DECAL,OIL デカル	1	[EXN/FINP]
13	571A3-82361		DECAL,CAUTION デカル	1	[EXN]
14	516G3-82801		DECAL,CAUTION デカル	1	[EXN]
-	516G3-82891		DECAL,CAUTION デカル	1	[EXN/SENP]
-	516G3-82901		DECAL,CAUTION デカル	1	[EXN/FINP]
15	534A3-82311		DECAL,BATTERY,A デカル	1	[EXN]
-	534A3-82411		DECAL,BATTERY,A デカル	1	[EXN/SENP]
-	534A3-82401		DECAL,BATTERY,A デカル	1	[EXN/FINP]
16	534A3-82421		DECAL,BATTERY,B デカル	1	[EXN]
-	534A3-82521		DECAL,BATTERY,B デカル	1	[EXN/SENP]
-	534A3-82511		DECAL,BATTERY,B デカル	1	[EXN/FINP]
17	55592-82001	+	DECAL,CERTIFICATE デカル	1	[EXN]

FIG.173 DECAL (2/2)[EXN]

(F50191N0) ﾃﾞｶﾙ(2/2)

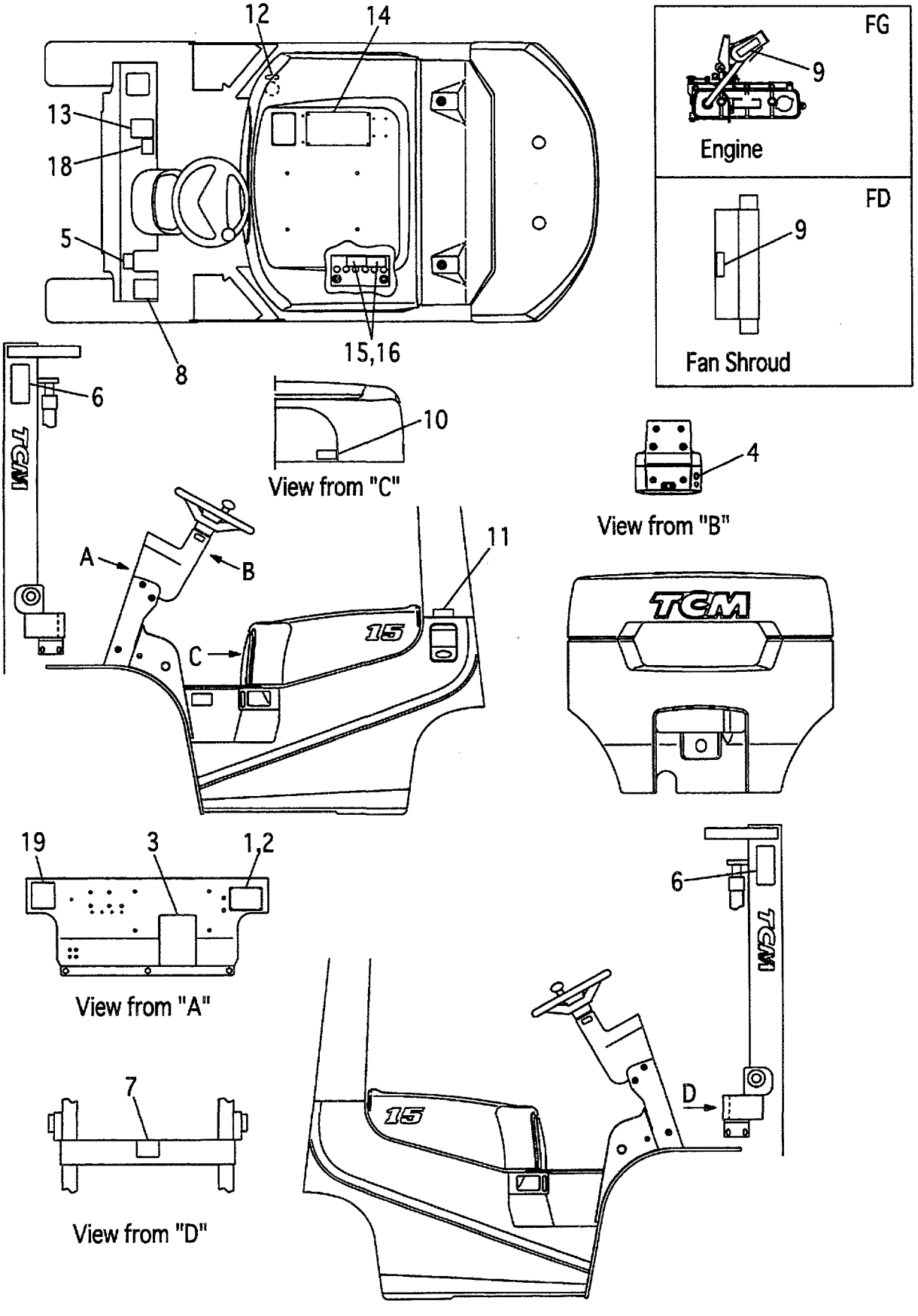

A:FG10C19 FG15C19 FG18C19 C:FD10C19 FD15C19 FD18C19
B:FG10T19 FG15T19 FG18T19 D:FD10T19 FD15T19 FD18T19

Item No	Part No.	Mark	Description	Req'd	Remarks : Serial No.
18	535H3-82411		DECAL,CREEP-CAUTION ﾃﾞｶﾙ	1	B,D [EXN]
-	535H3-82511		DECAL,CREEP-CAUTION ﾃﾞｶﾙ	1	B,D [EXN/SENP]
-	535H3-82501		DECAL,CREEP-CAUTION ﾃﾞｶﾙ	1	B,D [EXN/FINP]
19	535E3-82211		DECAL,EC-SOUND ﾃﾞｶﾙ	1	A,B:10323- [EXN]

FIG.174 SERVICE TOOLS [TO][EX]

(F5019210) サービスツール

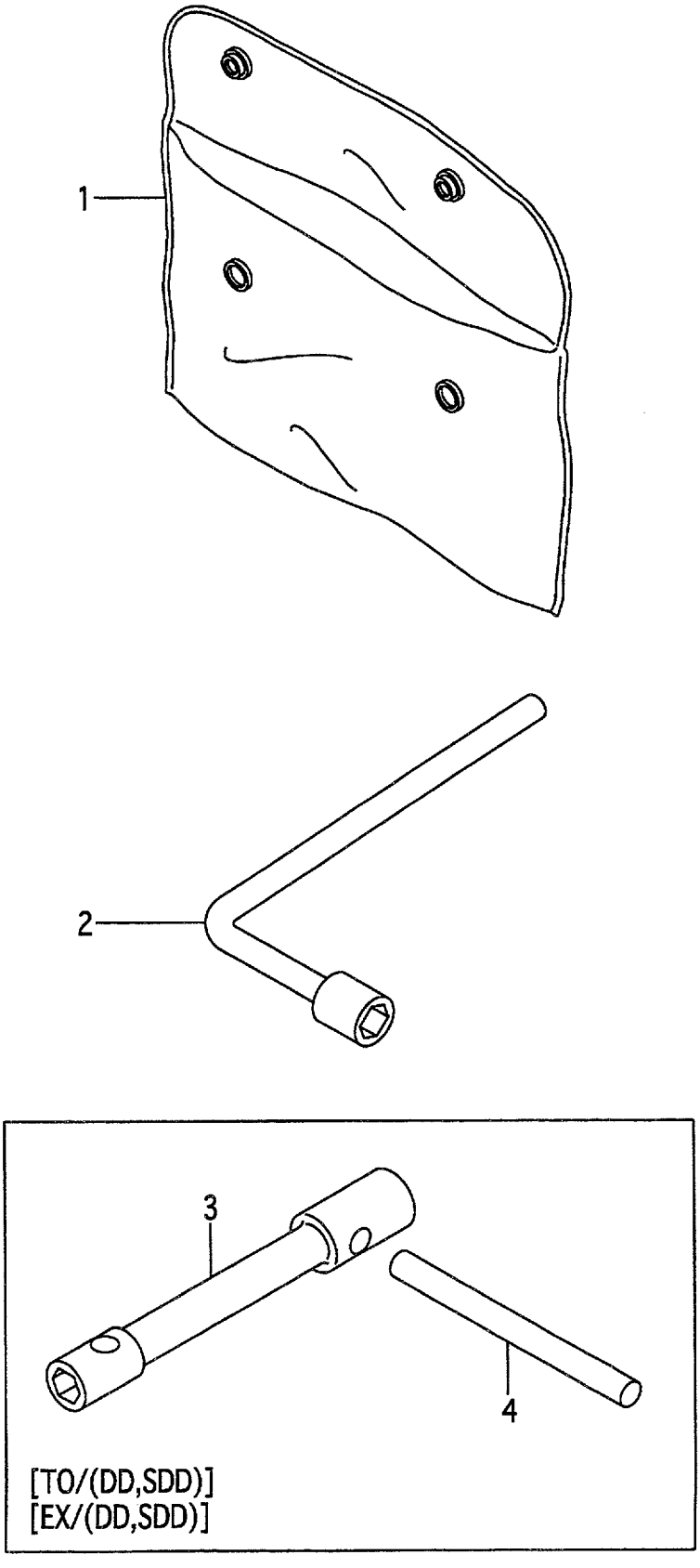

FIG.174
(F5019210)

A:FG10C19 FG10T19 FG15C19 FG15T19 FG18C19 FG18T19
B:FD10C19 FD10T19 FD15C19 FD15T19 FD18C19 FD18T19

Item No	Part No.	Mark	Description	Req'd	Remarks : Serial No.
1	214A9-20101		SACK,SERVICE-TOOLS サック	1	[TO][EX][TO/DD][TO/SDD] [EX/DD][EX/SDD]
2	22199-22251		WRENCH,HUB-NUT,21MM レンチ	1	[TO][EX][TO/DD][TO/SDD] [EX/DD][EX/SDD]
3	24239-22001		WRENCH,HUB-NUT,21MM レンチ	1	[TO/DD][TO/SDD][EX/DD] [EX/SDD]
4	20319-20041		LEVER,WRENCH,HUB-NUT レバー	1	[TO/DD][TO/SDD][EX/DD] [EX/SDD]

FIG.175 FRONT GLASS [AW071]

(F5019310) フロントガラス

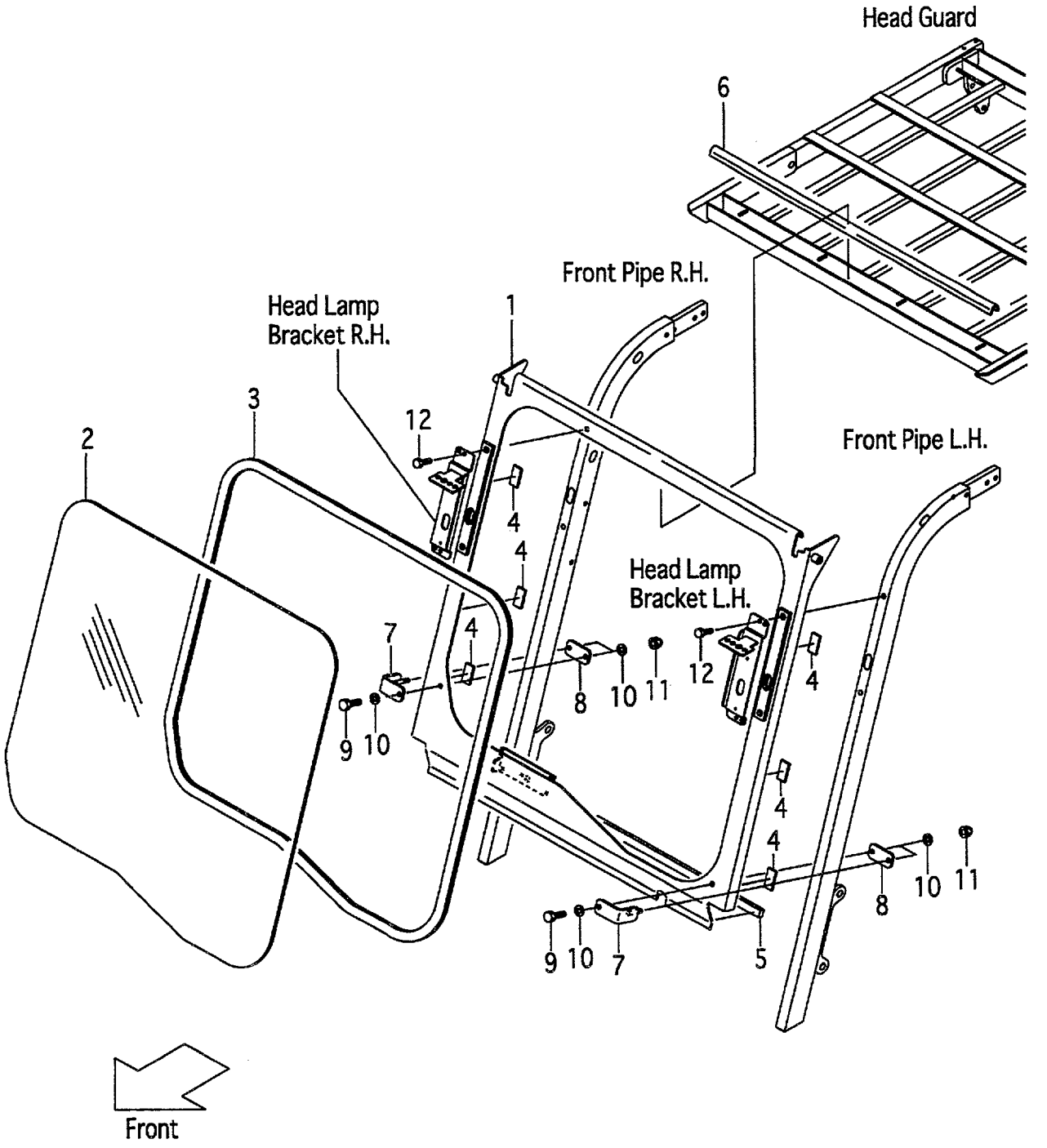

A:FG10C19 FG10T19 FG15C19 FG15T19 FG18C19 FG18T19
B:FD10C19 FD10T19 FD15C19 FD15T19 FD18C19 FD18T19

Item No	Part No.	Mark	Description		Req'd	Remarks : Serial No.
A1	536A5-40002		GLASS-ASSY,FRONT	ﾌﾛﾝﾄｶﾞﾗｽｱｯｾﾝ	1	[AW071] INC.1-3
-	539A5-40002		GLASS-ASSY,FRONT	ﾌﾛﾝﾄｶﾞﾗｽｱｯｾﾝ	1	[AW071/HGH] INC.1-3
1	536A5-40102		SUPPORT,GLASS	ｻﾎﾟｰﾄ	1	[AW071]
-	539A5-40102		SUPPORT,GLASS	ｻﾎﾟｰﾄ	1	[AW071/HGH]
2	536A5-42052		GLASS	ｶﾞﾗｽ	1	[AW071]
-	539A5-42052		GLASS	ｶﾞﾗｽ	1	[AW071/HGH]
3	514A5-42141		H-RUBBER	Hﾗﾊﾞｰ	1	[AW071]
4	529F5-42061		RUBBER	ﾗﾊﾞｰ	6	[AW071]
5	55535-42161		RUBBER,SEAL	ﾗﾊﾞｰ	1	[AW071]
6	529F5-42041		RUBBER	ﾗﾊﾞｰ	1	[AW071]
7	55535-42101		CLAMP	ｸﾗﾝﾌﾟ	2	[AW071]
8	55535-42141		PLATE	ﾌﾟﾚｰﾄ	2	[AW071]
9	01100-10090		BOLT	ﾎﾞﾙﾄ	2	[AW071]
10	02000-20010		WASHER	ﾜｯｼｬ	6	[AW071]
11	53671-92821		NUT,DOMED-CAP	ﾅｯﾄ	4	[AW071]
12	01183-08040		BOLT	ﾎﾞﾙﾄ	4	[AW071]

FIG.176 FRONT GLASS WIPER [AW071]

(F5019320) フロントガラス

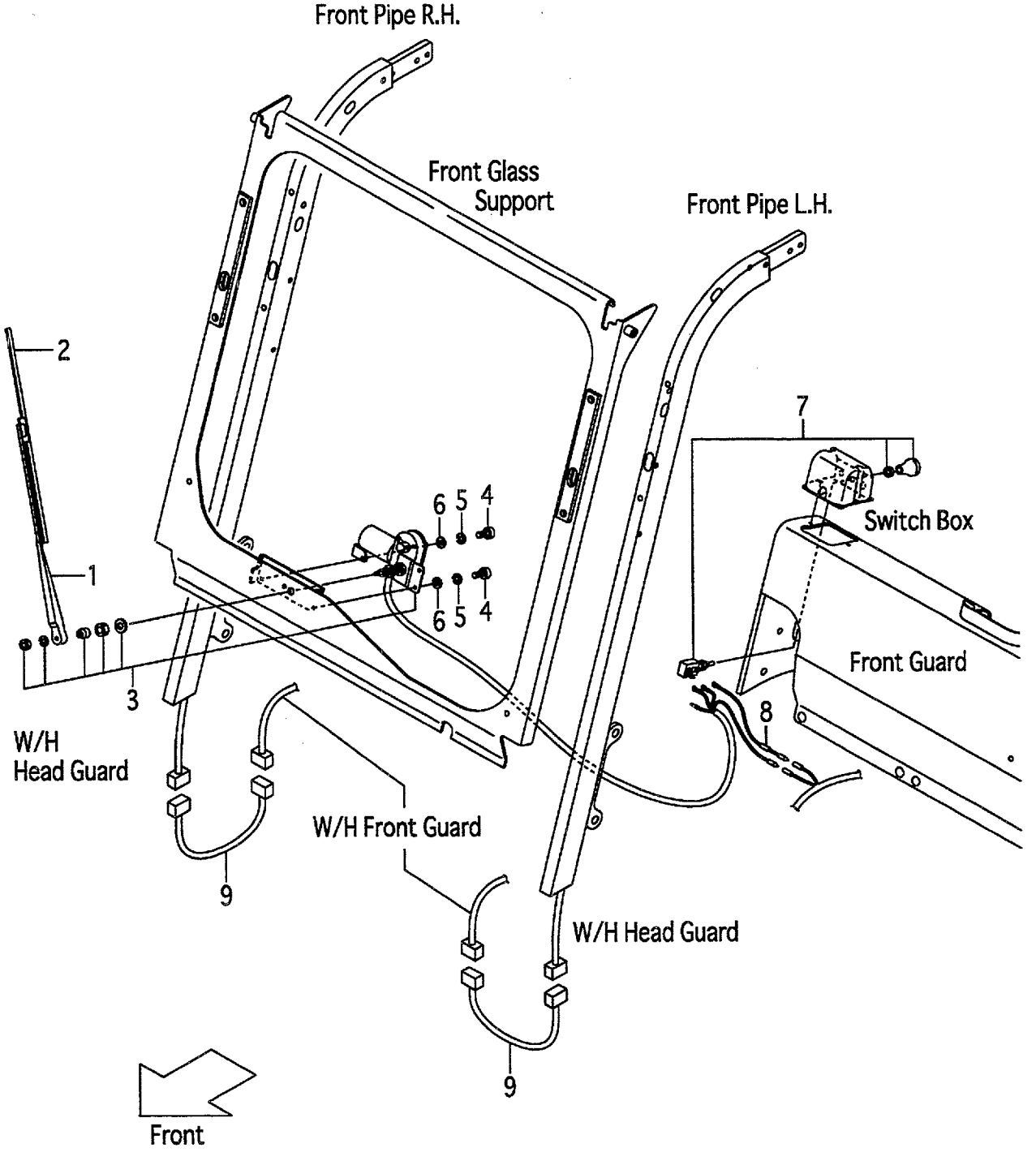

A:FG10C19 FG10T19 FG15C19 FG15T19 FG18C19 FG18T19
B:FD10C19 FD10T19 FD15C19 FD15T19 FD18C19 FD18T19

Item No	Part No.	Mark	Description		Req'd	Remarks : Serial No.
1	56600-59121		ARM,WIPER	ｱｰﾑ	1	[AW071]
2	514A5-42051		BLADE,WIPER	ﾌﾞﾚｰﾄﾞ	1	[AW071]
3	514A5-42031		MOTOR,WIPER	ﾓｰﾀ	1	[AW071]
4	01030-05012		SCREW	ｽｸﾘｭ	3	[AW071]
5	02010-00005		WASHER	ﾜｯｼｬ	3	[AW071]
6	02000-00005		WASHER	ﾜｯｼｬ	3	[AW071]
7	55595-43632		SWITCH,WIPER	ｽｲｯﾁ	1	[AW071]
8	534A5-42201		WIRE,LEAD	ﾜｲﾔ	1	[AW071]
9	229F2-42141		WIRE-HARNESS	ﾜｲﾔﾊｰﾈｽ	2	[AW071]

FIG.177 FIRE EXTINGUISHER [FE][FE M]

(F5019330) ﾌｧｲﾔｲｸｽﾃｨﾝｸﾞｲｯｼｬ

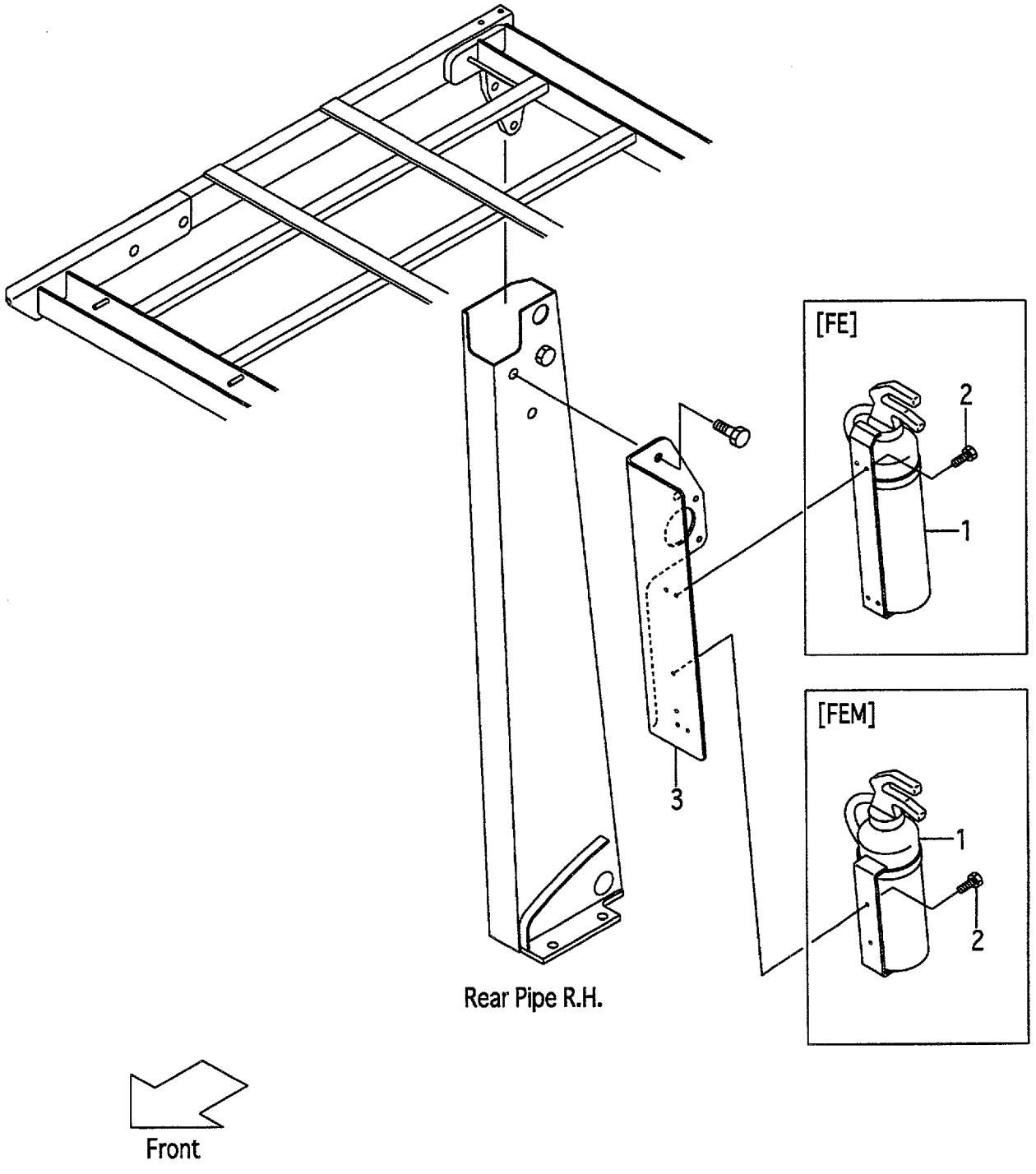

A:FG10C19 FG10T19 FG15C19 FG15T19 FG18C19 FG18T19
B:FD10C19 FD10T19 FD15C19 FD15T19 FD18C19 FD18T19

Item No	Part No.	Mark	Description	Req'd	Remarks : Serial No.
1	22679-12102		EXTINGUISHER,FIRE ｲｸｽﾃｨﾝｸﾞｲｯｼｬ	1	[FE]
-	271A9-12191		EXTINGUISHER,FIRE ｲｸｽﾃｨﾝｸﾞｲｯｼｬ	1	[FE M]
2	01183-05012		BOLT ﾎﾞﾙﾄ	4	[FE]
-	01183-05012		BOLT ﾎﾞﾙﾄ	2	[FE M]
3	539A9-62001		BRACKET,EXTINGUISHER ﾌﾞﾗｹｯﾄ	1	[FE][FE M]

FIG.178 FORK [VM18G]

(M5018110) フォーク

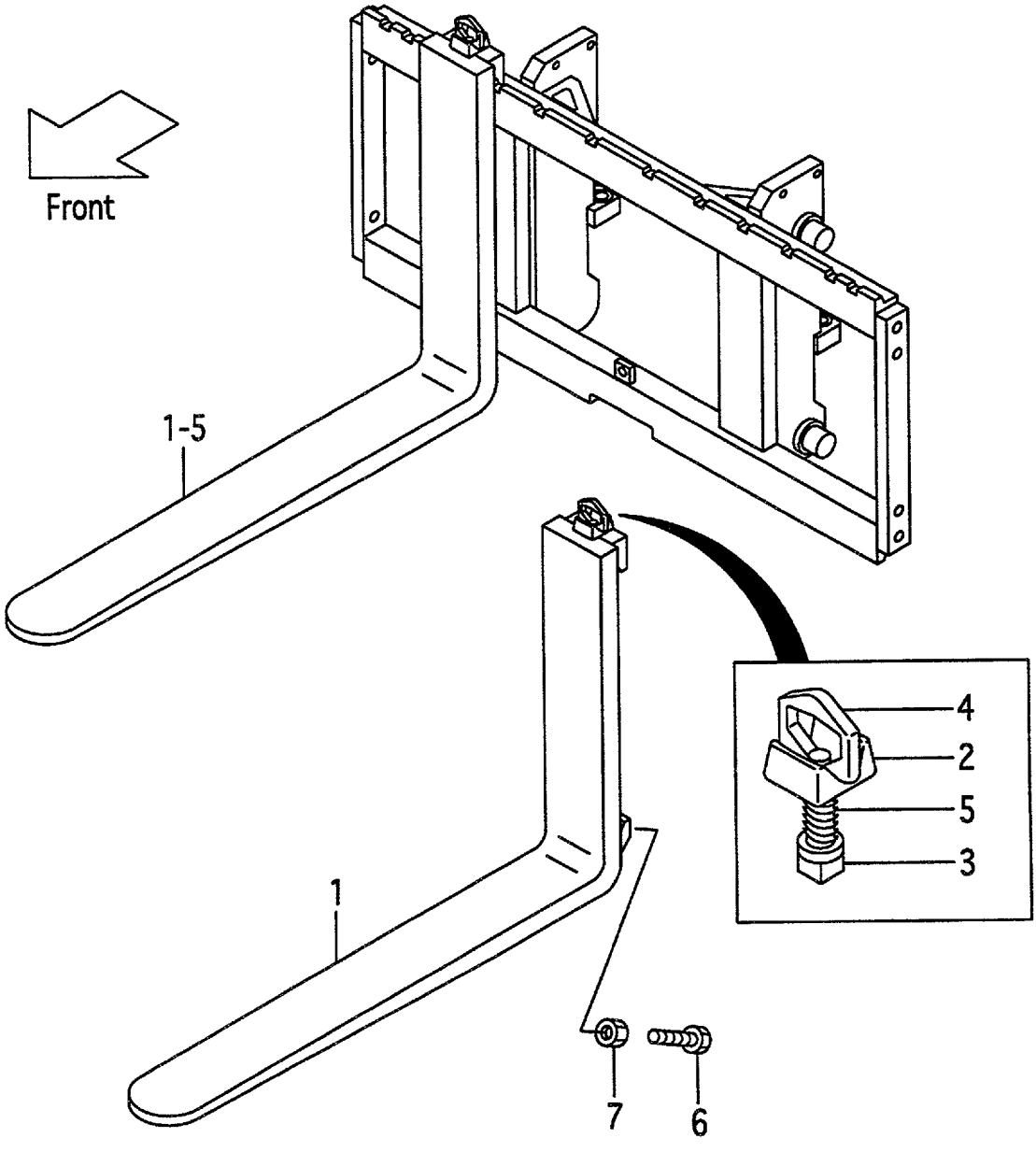

A:VM18G(0.9t)
B:VM18G(1.0t)
C:VM18G(1.5t)

FIG.178
(M5018110)

Item No	Part No.	Mark	Description		Req'd	Remarks : Serial No.
1	210B8-10502		FORK	ﾌｫｰｸ	2	A,B (L=770) INC.2-5
-	210F8-10512		FORK	ﾌｫｰｸ	2	C (L=920) INC.2-5
-	210B8-10502		FORK	ﾌｫｰｸ	2	A,B [LF077] INC.2-5
-	210B8-10512		FORK	ﾌｫｰｸ	2	A,B [LF085] INC.2-5
-	210F8-10502		FORK	ﾌｫｰｸ	2	C [LF085] INC.2-5
-	210F8-10572		FORK	ﾌｫｰｸ	2	[LF090] INC.2-5
-	210B8-10522		FORK	ﾌｫｰｸ	2	A,B [LF092] INC.2-5
-	210F8-10512		FORK	ﾌｫｰｸ	2	C [LF092] INC.2-5
-	210F8-10512		FORK	ﾌｫｰｸ	2	[EX] INC.2-5
-	210F8-10582		FORK	ﾌｫｰｸ	2	[LF100] INC.2-5
-	210F8-10522		FORK	ﾌｫｰｸ	2	[LF107] INC.2-5
-	210F8-10592		FORK	ﾌｫｰｸ	2	[LF110] INC.2-5
-	210F8-10602		FORK	ﾌｫｰｸ	2	[LF120] INC.2-5
-	210F8-10532		FORK	ﾌｫｰｸ	2	[LF122] INC.2-5
-	210H8-10612		FORK	ﾌｫｰｸ	2	[LF130] INC.2-5
-	210H8-10532		FORK	ﾌｫｰｸ	2	[LF137] INC.2-5
-	210H8-10622		FORK	ﾌｫｰｸ	2	[LF140] INC.2-5
-	210H8-10632		FORK	ﾌｫｰｸ	2	[LF150] INC.2-5
-	210H8-10542		FORK	ﾌｫｰｸ	2	[LF152] INC.2-5
-	210H8-10642		FORK	ﾌｫｰｸ	2	[LF160] INC.2-5
-	210H8-10552		FORK	ﾌｫｰｸ	2	C [LF167] INC.2-5
-	216B8-10301		FORK	ﾌｫｰｸ	2	A,B [LFD077] INC.2-5
-	216B8-10311		FORK	ﾌｫｰｸ	2	A,B [LFD085] INC.2-5
-	216G8-10301		FORK	ﾌｫｰｸ	2	C [LFD085] INC.2-5
-	216G8-10371		FORK	ﾌｫｰｸ	2	[LFD090] INC.2-5
-	216B8-10321		FORK	ﾌｫｰｸ	2	A,B [LFD092] INC.2-5
-	216G8-10311		FORK	ﾌｫｰｸ	2	C [LFD092] INC.2-5
-	216G8-10381		FORK	ﾌｫｰｸ	2	[LFD100] INC.2-5
-	216G8-10321		FORK	ﾌｫｰｸ	2	[LFD107] INC.2-5
-	216G8-10391		FORK	ﾌｫｰｸ	2	[LFD110] INC.2-5
-	216G8-10401		FORK	ﾌｫｰｸ	2	[LFD120] INC.2-5
-	216G8-10331		FORK	ﾌｫｰｸ	2	[LFD122] INC.2-5
-	216G8-10411		FORK	ﾌｫｰｸ	2	[LFD130] INC.2-5
-	216G8-10341		FORK	ﾌｫｰｸ	2	[LFD137] INC.2-5
-	216G8-10421		FORK	ﾌｫｰｸ	2	[LFD140] INC.2-5
-	216G8-10431		FORK	ﾌｫｰｸ	2	[LFD150] INC.2-5
-	216G8-10351		FORK	ﾌｫｰｸ	2	[LFD152] INC.2-5

FIG.178 FORK [VM18G]

(M5018110) フォーク

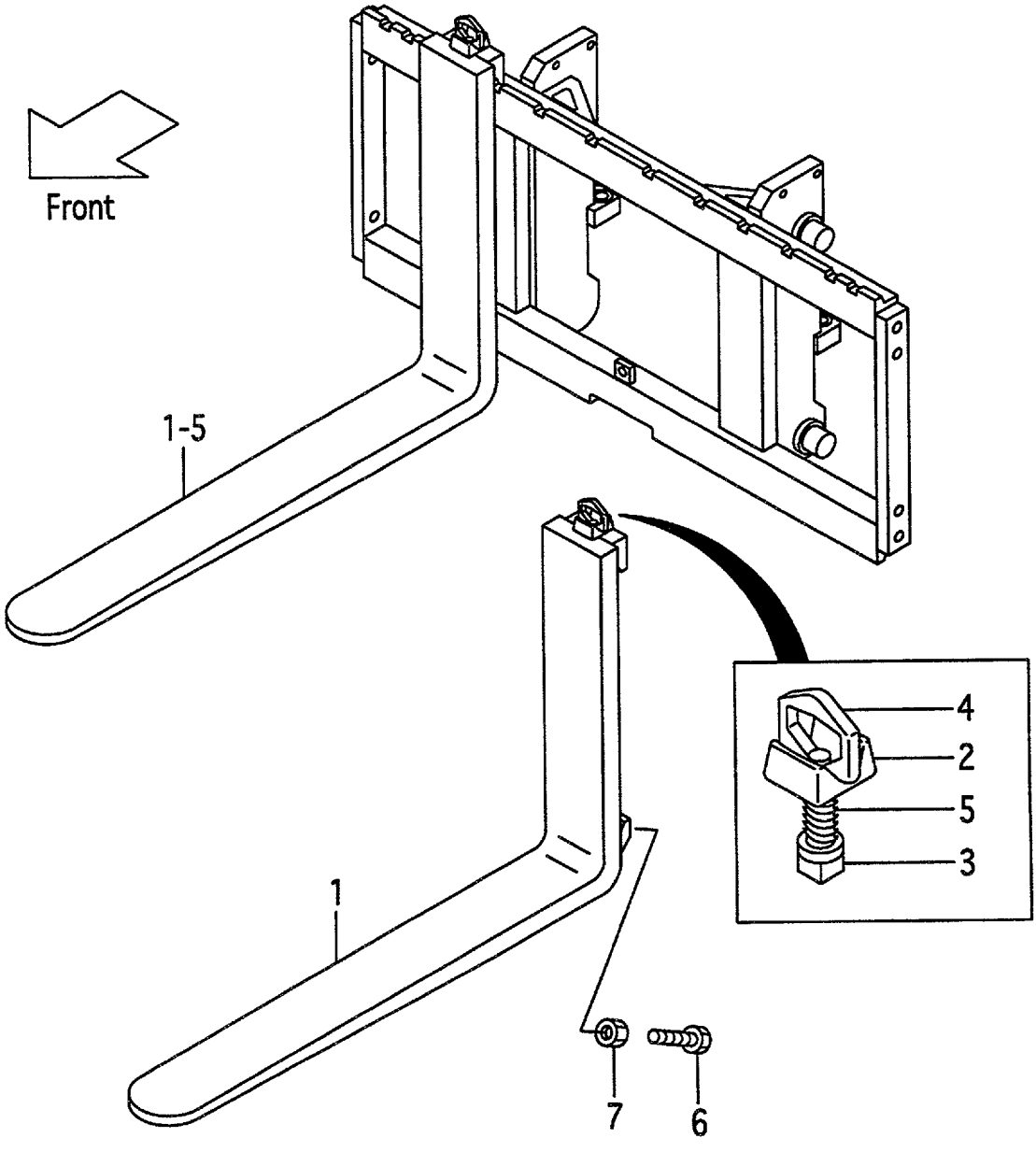

A:VM18G(0.9t)
B:VM18G(1.0t)
C:VM18G(1.5t)

FIG.178
(M5018110)

Item No	Part No.	Mark	Description		Req'd	Remarks : Serial No.
-	216G8-10441		FORK	ﾌｫｰｸ	2	[LFD160] INC.2-5
-	216G8-10361		FORK	ﾌｫｰｸ	2	C [LFD167] INC.2-5
A1	214A8-11001		STOPPER-ASSY	ｽﾄｯﾊﾟｱｯｾﾝ	2	INC.2-5
2	214A8-12001		HEAD	ﾍｯﾄﾞ	2	
3	214A8-12011		STOPPER	ｽﾄｯﾊﾟ	2	
4	214A8-12021		HANDLE	ﾊﾝﾄﾞﾙ	2	
5	214A8-12031		SPRING	ｽﾌﾟﾘﾝｸﾞ	2	
6	216G8-12101		BOLT	ﾎﾞﾙﾄ	4	[LFD]
7	01402-00010		NUT	ﾅｯﾄ	4	[LFD]

FIG.179 LIFT BRACKET [VM18G]

(M5018210) リフトブラケット

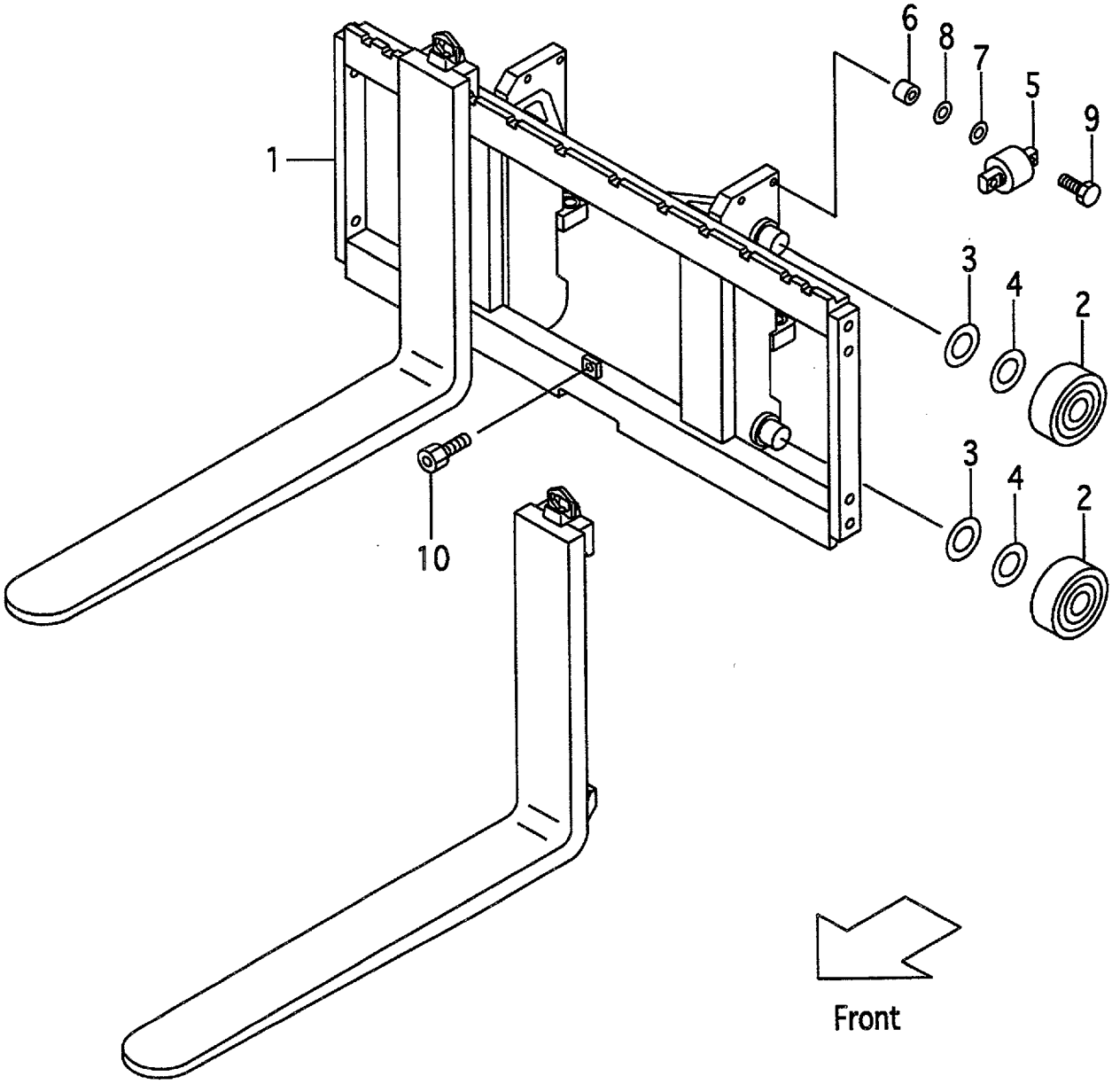

A:VM18G(0.9t)
B:VM18G(1.0t)
C:VM18G(1.5t)

FIG.179
(M5018210)

Item No	Part No.	Mark	Description		Req'd	Remarks : Serial No.
1	218G8-20001		BRACKET,LIFT	ﾘﾌﾄﾌﾞﾗｹｯﾄ	1	
2	211F8-22201		ROLLER,END,102.0	ﾛｰﾗ	4	
-	211F8-22211		ROLLER,END,102.5	ﾛｰﾗ	(4)	
-	511F3-74021		ROLLER,END,102.0	ﾛｰﾗ	4	B,C [FC][FCS35][FCS55][CS35] [CSA][FCS45]
-	511F3-74031		ROLLER,END,102.5	ﾛｰﾗ	(4)	B,C [FC][FCS35][FCS55][CS35] [CSA][FCS45]
3	211F8-22261		SHIM,T-0.5	ｼﾑ	4	
-	211F8-22261		SHIM,T-0.5	ｼﾑ	4	B,C [FC][FCS35][FCS55][CS35] [CSA][FCS45]
4	211F8-22271		SHIM,T-1.0	ｼﾑ	8	
-	211F8-22271		SHIM,T-1.0	ｼﾑ	8	B,C [FC][FCS35][FCS55][CS35] [CSA][FCS45]
5	22018-30304		ROLLER,SIDE	ﾛｰﾗ	2	
-	510F3-74001		ROLLER,SIDE	ﾛｰﾗ	2	B,C [FC][FCS35][FCS55][CS35] [CSA][FCS45]
6	22578-32841		SPACER	ｽﾍﾟｰｻ	4	
-	22578-32841		SPACER	ｽﾍﾟｰｻ	4	B,C [FC][FCS35][FCS55][CS35] [CSA][FCS45]
7	22018-30261		SHIM	ｼﾑ	8	
-	22018-30261		SHIM	ｼﾑ	8	B,C [FC][FCS35][FCS55][CS35] [CSA][FCS45]
8	22018-30121		SHIM	ｼﾑ	4	
-	22018-30121		SHIM	ｼﾑ	4	B,C [FC][FCS35][FCS55][CS35] [CSA][FCS45]
9	01103-10050		BOLT & WASHER	ﾎﾞﾙﾄ & ﾜｯｼｬ	4	
10	01184-12025		BOLT & WASHER	ﾎﾞﾙﾄ & ﾜｯｼｬ	1	

FIG.180 BACKREST [VM18G]

(M5018220) ﾊﾞｯｸﾚｽﾄ

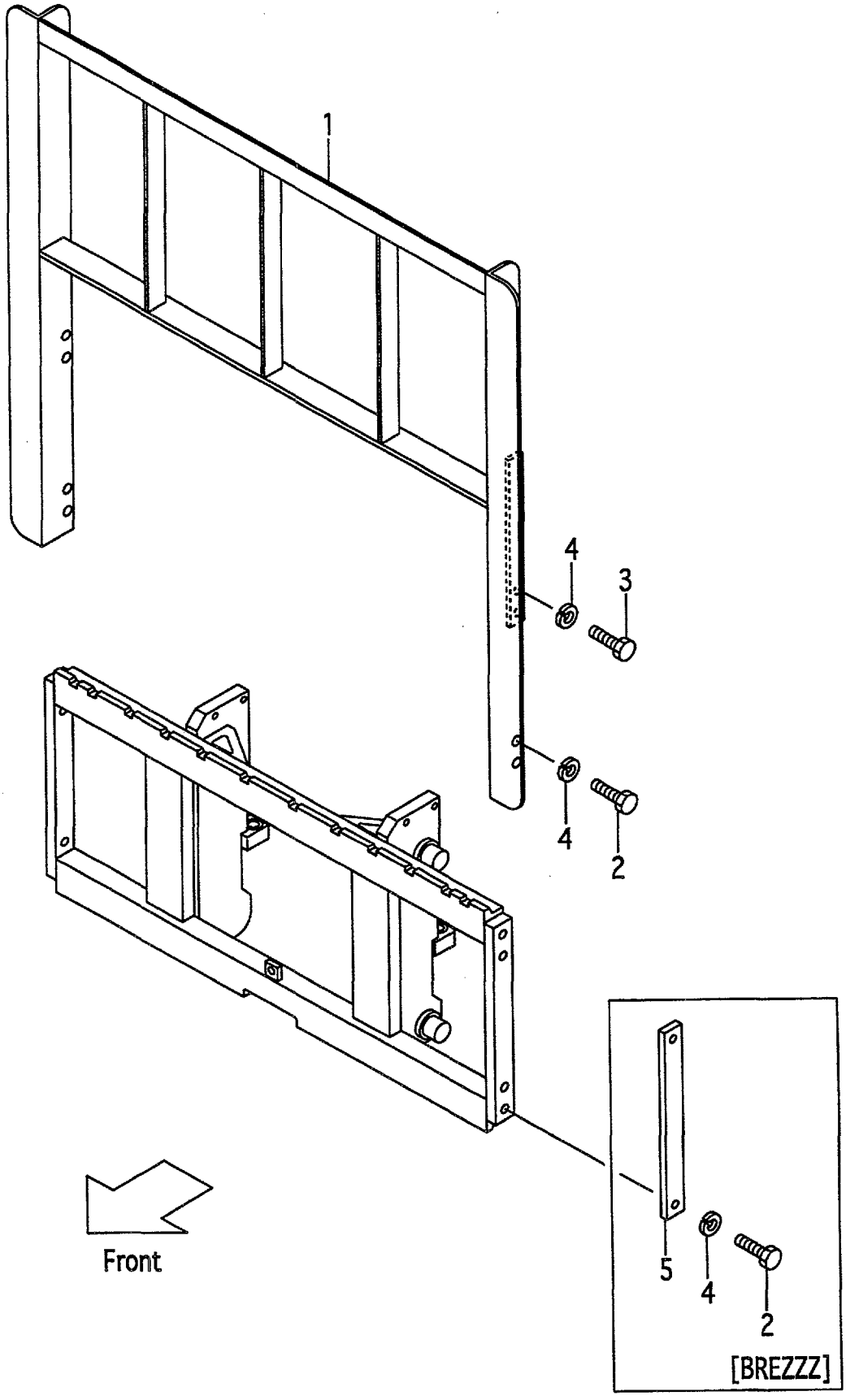

A:VM18G(0.9t)
B:VM18G(1.0t)
C:VM18G(1.5t)

FIG.180
(M5018220)

Item No	Part No.	Mark	Description		Req'd	Remarks : Serial No.
1	216G8-22201		BACKREST	ﾊﾞｯｸﾚｽﾄ	1	
2	01100-14025		BOLT	ﾎﾞﾙﾄ	4	
-	01100-14025		BOLT	ﾎﾞﾙﾄ	4	[BREZZZ]
3	01100-14030		BOLT	ﾎﾞﾙﾄ	4	
4	02010-00014		WASHER	ﾜｯｼｬ	8	
-	02010-00014		WASHER	ﾜｯｼｬ	4	[BREZZZ]
5	23659-42161		PLATE	ﾌﾟﾚｰﾄ	2	[BREZZZ]

FIG.181 MAST [VM18G]

(M5018310) マスト

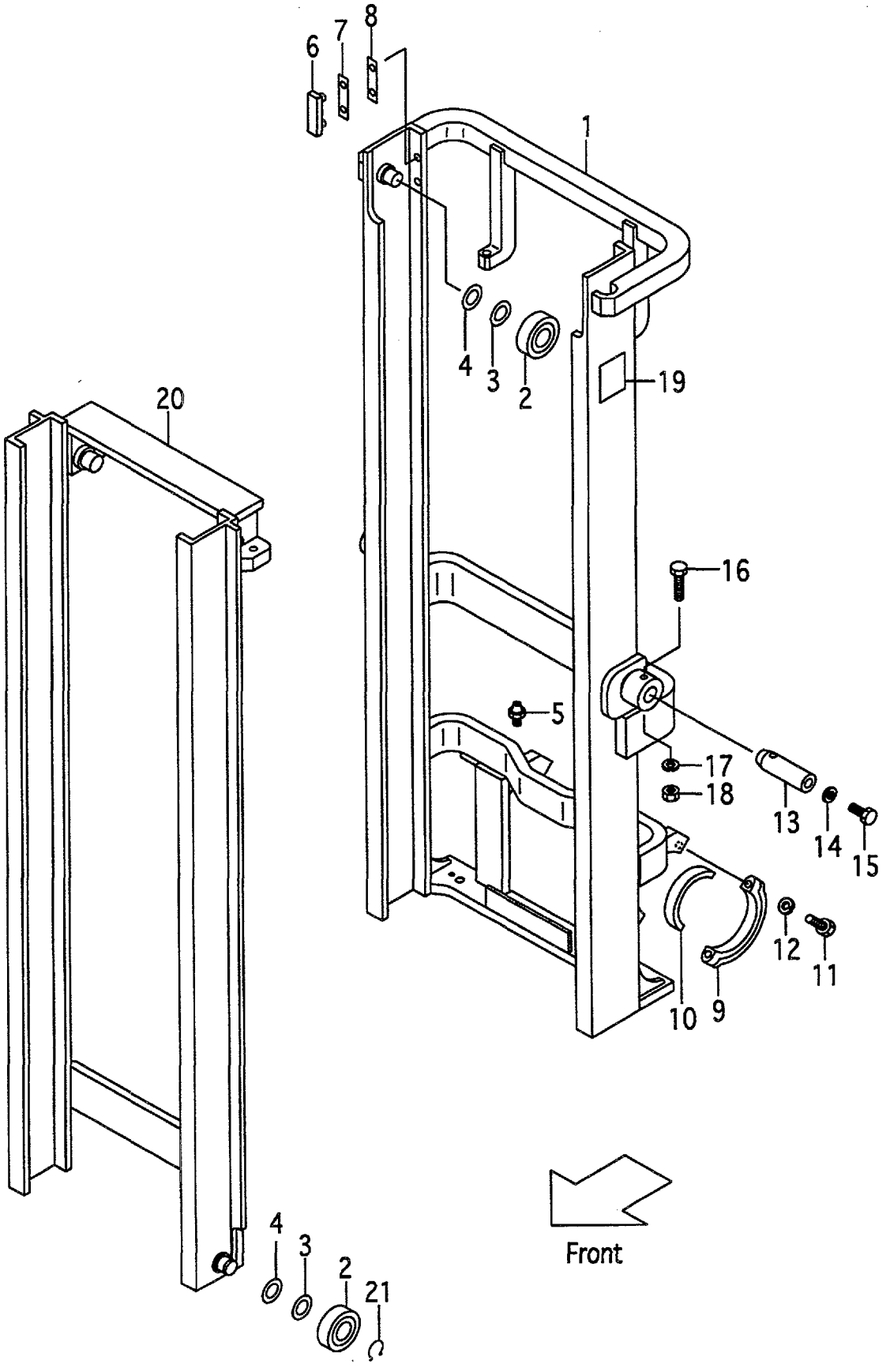

A:VM18G(0.9t)
B:VM18G(1.0t)
C:VM18G(1.5t)

FIG.181
(M5018310)

Item No	Part No.	Mark	Description		Req'd	Remarks : Serial No.
1	218G8-30211		MAST,OUTER VM200	ｱｳﾀﾏｽﾄ	1	
-	218G8-30221		MAST,OUTER VM225	ｱｳﾀﾏｽﾄ	1	
-	218G8-30231		MAST,OUTER VM250	ｱｳﾀﾏｽﾄ	1	
-	218G8-30241		MAST,OUTER VM270	ｱｳﾀﾏｽﾄ	1	
-	218G8-30251		MAST,OUTER VM275	ｱｳﾀﾏｽﾄ	1	
-	218G8-30201		MAST,OUTER VM300	ｱｳﾀﾏｽﾄ	1	
-	218G8-30261		MAST,OUTER VM325	ｱｳﾀﾏｽﾄ	1	
-	218G8-30271		MAST,OUTER VM330	ｱｳﾀﾏｽﾄ	1	
-	218E8-30281		MAST,OUTER VM350	ｱｳﾀﾏｽﾄ	1	
-	218G8-30291		MAST,OUTER VM366	ｱｳﾀﾏｽﾄ	1	
-	218G8-30301		MAST,OUTER VM370	ｱｳﾀﾏｽﾄ	1	
-	218G8-30311		MAST,OUTER VM375	ｱｳﾀﾏｽﾄ	1	
-	218G8-30321		MAST,OUTER VM400	ｱｳﾀﾏｽﾄ	1	
-	218G8-30331		MAST,OUTER VM425	ｱｳﾀﾏｽﾄ	1	
-	218G8-30341		MAST,OUTER VM450	ｱｳﾀﾏｽﾄ	1	
-	218G8-30351		MAST,OUTER VM475	ｱｳﾀﾏｽﾄ	1	
-	218G8-30361		MAST,OUTER VM500	ｱｳﾀﾏｽﾄ	1	
-	218G8-30371		MAST,OUTER VM550	ｱｳﾀﾏｽﾄ	1	
-	218G8-30381		MAST,OUTER VM600	ｱｳﾀﾏｽﾄ	1	
2	211F8-22221		ROLLER,END,102.0	ﾛｰﾗ	2	
-	211F8-22231		ROLLER,END,102.5	ﾛｰﾗ	(2)	
-	511F3-74021		ROLLER,END,102.0	ﾛｰﾗ	2	B,C [FC][FCS35][FCS55][CS35] [CSA][FCS45]
-	511F3-74031		ROLLER,END,102.5	ﾛｰﾗ	(2)	B,C [FC][FCS35][FCS55][CS35] [CSA][FCS45]
3	211F8-22261		SHIM,T-0.5	ｼﾑ	4	B,C [FC][FCS35][FCS55][CS35] [CSA][FCS45]
-	211F8-22261		SHIM,T-0.5	ｼﾑ	8	
-	211F8-22261		SHIM,T-0.5	ｼﾑ	4	B,C [FCS35][FCS55][CS35] [FCS45]
4	211F8-22271		SHIM,T-1.0	ｼﾑ	8	B,C [FC][FCS35][FCS55][CS35] [CSA][FCS45]
-	211F8-22271		SHIM,T-1.0	ｼﾑ	16	
-	211F8-22271		SHIM,T-1.0	ｼﾑ	8	B,C [FCS35][FCS55][CS35] [FCS45]
5	04901-00100		FITTING	ﾌｨｯﾃｨﾝｸﾞ	2	
6	216G8-33401		SLIPPER	ｽﾘｯﾊﾟ	2	
7	216G8-33361		SHIM,T-0.5	ｼﾑ	8	
8	216G8-33371		SHIM,T-1.0	ｼﾑ	4	
9	210F6-12441		CAP	ｷｬｯﾌﾟ	2	
10	216G8-02001		BUSHING	ﾌﾞｯｼﾝｸﾞ	2	
11	01100-14065		BOLT	ﾎﾞﾙﾄ	4	
12	02010-00014		WASHER	ﾜｯｼｬ	4	
13	210F8-02102		PIN	ﾋﾟﾝ	2	

FIG.181 MAST [VM18G]

(M5018310) マスト

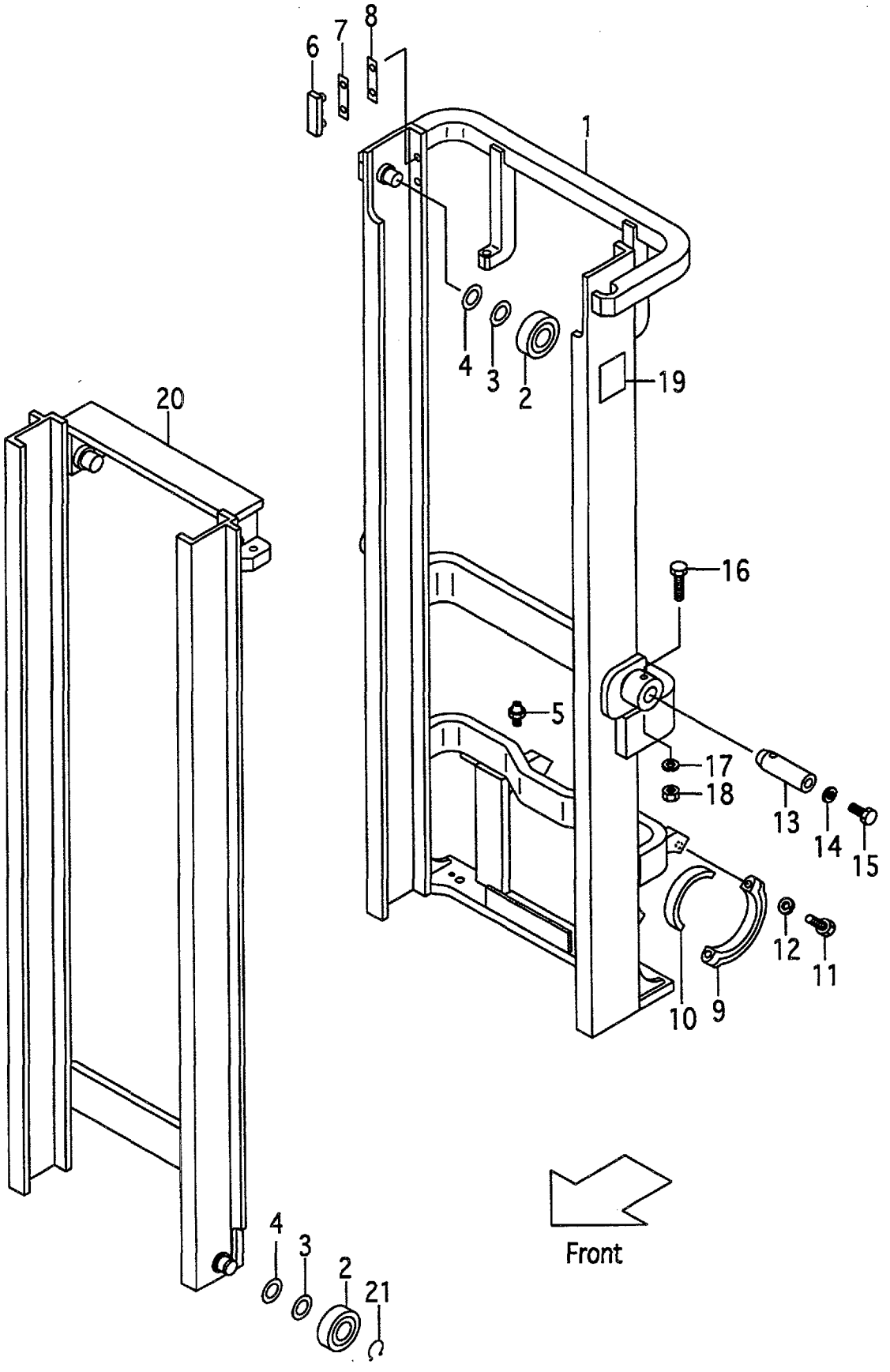

A:VM18G(0.9t)
B:VM18G(1.0t)
C:VM18G(1.5t)

FIG.181
(M5018310)

Item No	Part No.	Mark	Description		Req'd	Remarks : Serial No.
14	216G8-52311		WASHER	ﾜｯｼｬ	2	
15	216G4-12251		BOLT	ﾎﾞﾙﾄ	2	
16	216G8-52321		BOLT	ﾎﾞﾙﾄ	2	
17	02010-20012		WASHER	ﾜｯｼｬ	2	
18	234A8-42571		NUT	ﾅｯﾄ	2	
19	23678-06002		PLATE,NAME	ﾌﾟﾚｰﾄ	1	
20	218G8-30411		MAST,INNER VM200	ｲﾝﾅﾏｽﾄ	1	
-	218G8-30421		MAST,INNER VM225	ｲﾝﾅﾏｽﾄ	1	
-	218G8-30431		MAST,INNER VM250	ｲﾝﾅﾏｽﾄ	1	
-	218G8-30441		MAST,INNER VM270	ｲﾝﾅﾏｽﾄ	1	
-	218G8-30451		MAST,INNER VM275	ｲﾝﾅﾏｽﾄ	1	
-	218G8-30401		MAST,INNER VM300	ｲﾝﾅﾏｽﾄ	1	
-	218G8-30461		MAST,INNER VM325	ｲﾝﾅﾏｽﾄ	1	
-	218G8-30471		MAST,INNER VM330	ｲﾝﾅﾏｽﾄ	1	
-	218G8-30481		MAST,INNER VM350	ｲﾝﾅﾏｽﾄ	1	
-	218G8-30491		MAST,INNER VM366	ｲﾝﾅﾏｽﾄ	1	
-	218G8-30501		MAST,INNER VM370	ｲﾝﾅﾏｽﾄ	1	
-	218G8-30511		MAST,INNER VM375	ｲﾝﾅﾏｽﾄ	1	
-	218G8-30521		MAST,INNER VM400	ｲﾝﾅﾏｽﾄ	1	
-	218G8-30531		MAST,INNER VM425	ｲﾝﾅﾏｽﾄ	1	
-	218G8-30541		MAST,INNER VM450	ｲﾝﾅﾏｽﾄ	1	
-	218G8-30551		MAST,INNER VM475	ｲﾝﾅﾏｽﾄ	1	
-	218G8-30561		MAST,INNER VM500	ｲﾝﾅﾏｽﾄ	1	
-	218G8-30571		MAST,INNER VM550	ｲﾝﾅﾏｽﾄ	1	
-	218G8-30581		MAST,INNER VM600	ｲﾝﾅﾏｽﾄ	1	
21	09192-30035		RING,SNAP	ｽﾅｯﾌﾟﾘﾝｸﾞ	2	
-	09192-30035		RING,SNAP	ｽﾅｯﾌﾟﾘﾝｸﾞ	2	B,C [FC][FCS35][FCS55][CS35] [CSA][FCS45]

FIG.182 LIFT CYLINDER [VM18G]

(M5018410) リフトシリンダ

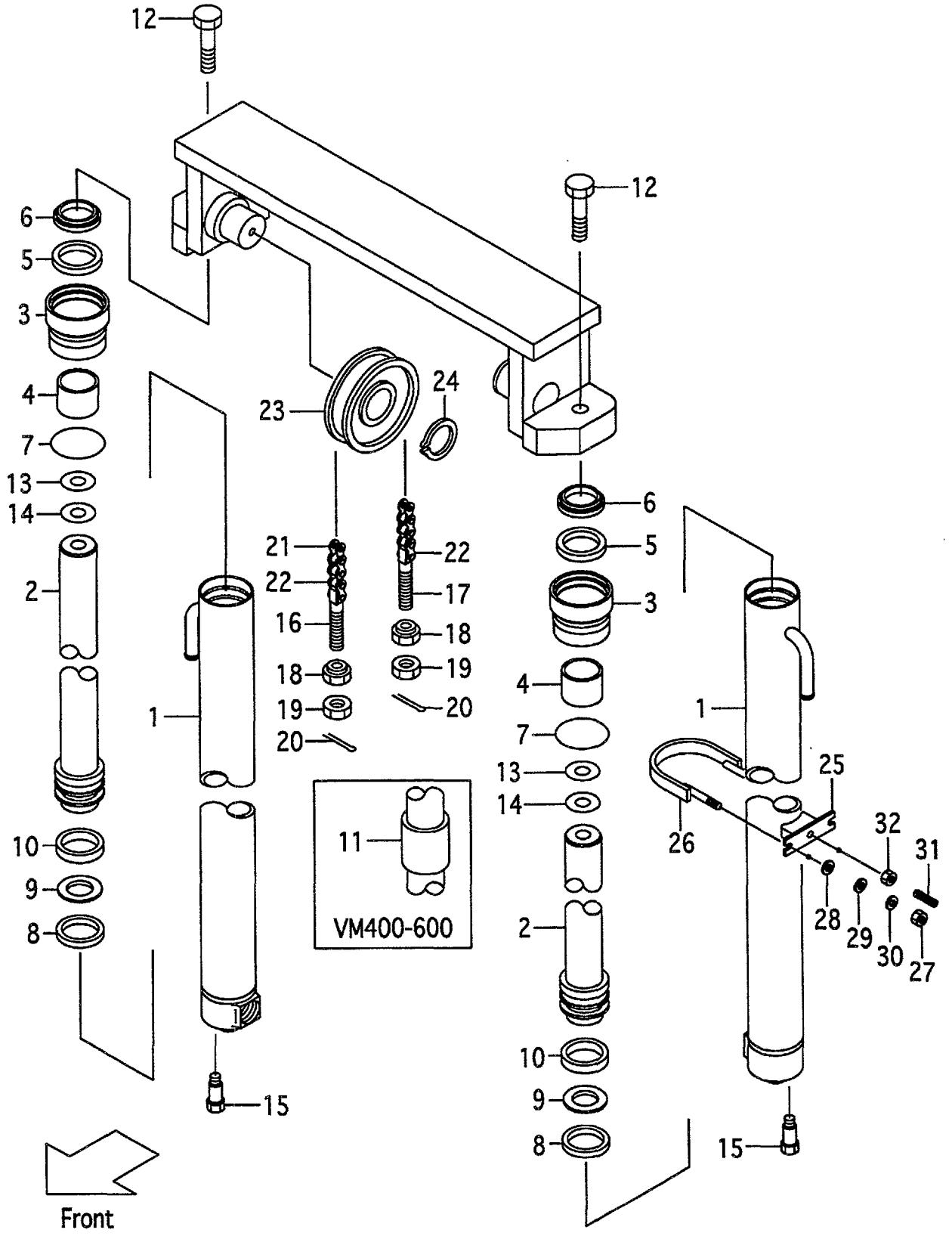

A:VM18G(0.9t)
B:VM18G(1.0t)
C:VM18G(1.5t)

FIG.182
(M5018410)

Item No	Part No.	Mark	Description		Req'd	Remarks : Serial No.
A1	218G8-40011		CYL-ASSY,LIFT VM200	ﾘﾌﾄｼﾘﾝﾀﾞｱｯｾﾝ	2	INC.1-11
-	218G8-40021		CYL-ASSY,LIFT VM225	ﾘﾌﾄｼﾘﾝﾀﾞｱｯｾﾝ	2	INC.1-11
-	218G8-40031		CYL-ASSY,LIFT VM250	ﾘﾌﾄｼﾘﾝﾀﾞｱｯｾﾝ	2	INC.1-11
-	218G8-40041		CYL-ASSY,LIFT VM270	ﾘﾌﾄｼﾘﾝﾀﾞｱｯｾﾝ	2	INC.1-11
-	218G8-40051		CYL-ASSY,LIFT VM275	ﾘﾌﾄｼﾘﾝﾀﾞｱｯｾﾝ	2	INC.1-11
-	218G8-40001		CYL-ASSY,LIFT VM300	ﾘﾌﾄｼﾘﾝﾀﾞｱｯｾﾝ	2	INC.1-11
-	218G8-40061		CYL-ASSY,LIFT VM325	ﾘﾌﾄｼﾘﾝﾀﾞｱｯｾﾝ	2	INC.1-11
-	218G8-40071		CYL-ASSY,LIFT VM330	ﾘﾌﾄｼﾘﾝﾀﾞｱｯｾﾝ	2	INC.1-11
-	218G8-40081		CYL-ASSY,LIFT VM350	ﾘﾌﾄｼﾘﾝﾀﾞｱｯｾﾝ	2	INC.1-11
-	218G8-40091		CYL-ASSY,LIFT VM366	ﾘﾌﾄｼﾘﾝﾀﾞｱｯｾﾝ	2	INC.1-11
-	218G8-40101		CYL-ASSY,LIFT VM370	ﾘﾌﾄｼﾘﾝﾀﾞｱｯｾﾝ	2	INC.1-11
-	218G8-40111		CYL-ASSY,LIFT VM375	ﾘﾌﾄｼﾘﾝﾀﾞｱｯｾﾝ	2	INC.1-11
-	218G8-40121		CYL-ASSY,LIFT VM400	ﾘﾌﾄｼﾘﾝﾀﾞｱｯｾﾝ	2	INC.1-11
-	218G8-40131		CYL-ASSY,LIFT VM425	ﾘﾌﾄｼﾘﾝﾀﾞｱｯｾﾝ	2	INC.1-11
-	218G8-40141		CYL-ASSY,LIFT VM450	ﾘﾌﾄｼﾘﾝﾀﾞｱｯｾﾝ	2	INC.1-11
-	218G8-40151		CYL-ASSY,LIFT VM475	ﾘﾌﾄｼﾘﾝﾀﾞｱｯｾﾝ	2	INC.1-11
-	218G8-40161		CYL-ASSY,LIFT VM500	ﾘﾌﾄｼﾘﾝﾀﾞｱｯｾﾝ	2	INC.1-11
-	218G8-40171		CYL-ASSY,LIFT VM550	ﾘﾌﾄｼﾘﾝﾀﾞｱｯｾﾝ	2	INC.1-11
-	218G8-40181		CYL-ASSY,LIFT VM600	ﾘﾌﾄｼﾘﾝﾀﾞｱｯｾﾝ	2	INC.1-11
1	B-30697-49101		BODY,CYL VM200	ﾎﾞﾃﾞｨ	2	
-	B-30697-49201		BODY,CYL VM225	ﾎﾞﾃﾞｨ	2	
-	B-30697-49301		BODY,CYL VM250	ﾎﾞﾃﾞｨ	2	
-	B-30697-49401		BODY,CYL VM270	ﾎﾞﾃﾞｨ	2	
-	B-30697-49501		BODY,CYL VM275	ﾎﾞﾃﾞｨ	2	
-	B-30697-49601		BODY,CYL VM300	ﾎﾞﾃﾞｨ	2	
-	B-30697-49701		BODY,CYL VM325	ﾎﾞﾃﾞｨ	2	
-	B-30697-49801		BODY,CYL VM330	ﾎﾞﾃﾞｨ	2	
-	B-30697-49901		BODY,CYL VM350	ﾎﾞﾃﾞｨ	2	
-	B-30697-50001		BODY,CYL VM366	ﾎﾞﾃﾞｨ	2	
-	B-30697-50101		BODY,CYL VM370	ﾎﾞﾃﾞｨ	2	
-	B-30697-50201		BODY,CYL VM375	ﾎﾞﾃﾞｨ	2	
-	B-30697-50301		BODY,CYL VM400	ﾎﾞﾃﾞｨ	2	
-	B-30697-50401		BODY,CYL VM425	ﾎﾞﾃﾞｨ	2	
-	B-30697-50501		BODY,CYL VM450	ﾎﾞﾃﾞｨ	2	
-	B-30697-50601		BODY,CYL VM475	ﾎﾞﾃﾞｨ	2	
-	B-30697-50701		BODY,CYL VM500	ﾎﾞﾃﾞｨ	2	
-	B-30697-50801		BODY,CYL VM550	ﾎﾞﾃﾞｨ	2	
-	B-30697-50901		BODY,CYL VM600	ﾎﾞﾃﾞｨ	2	
2	B-B6527-62102		ROD,PISTON VM200	ﾛｯﾄﾞ	2	
-	B-B6537-88202		ROD,PISTON VM225	ﾛｯﾄﾞ	2	
-	B-B6527-62302		ROD,PISTON VM250	ﾛｯﾄﾞ	2	
-	B-B6527-62402		ROD,PISTON VM270	ﾛｯﾄﾞ	2	
-	B-B6537-88502		ROD,PISTON VM275	ﾛｯﾄﾞ	2	
-	B-B6527-62502		ROD,PISTON VM300	ﾛｯﾄﾞ	2	
-	B-B6537-88702		ROD,PISTON VM325	ﾛｯﾄﾞ	2	
-	B-B6527-62602		ROD,PISTON VM330	ﾛｯﾄﾞ	2	
-	B-B6527-62702		ROD,PISTON VM350	ﾛｯﾄﾞ	2	
-	B-B6537-89002		ROD,PISTON VM366	ﾛｯﾄﾞ	2	
-	B-B6527-62802		ROD,PISTON VM370	ﾛｯﾄﾞ	2	
-	B-B6537-89202		ROD,PISTON VM375	ﾛｯﾄﾞ	2	

FIG.182 LIFT CYLINDER [VM18G]

(M5018410) リフトシリンダ

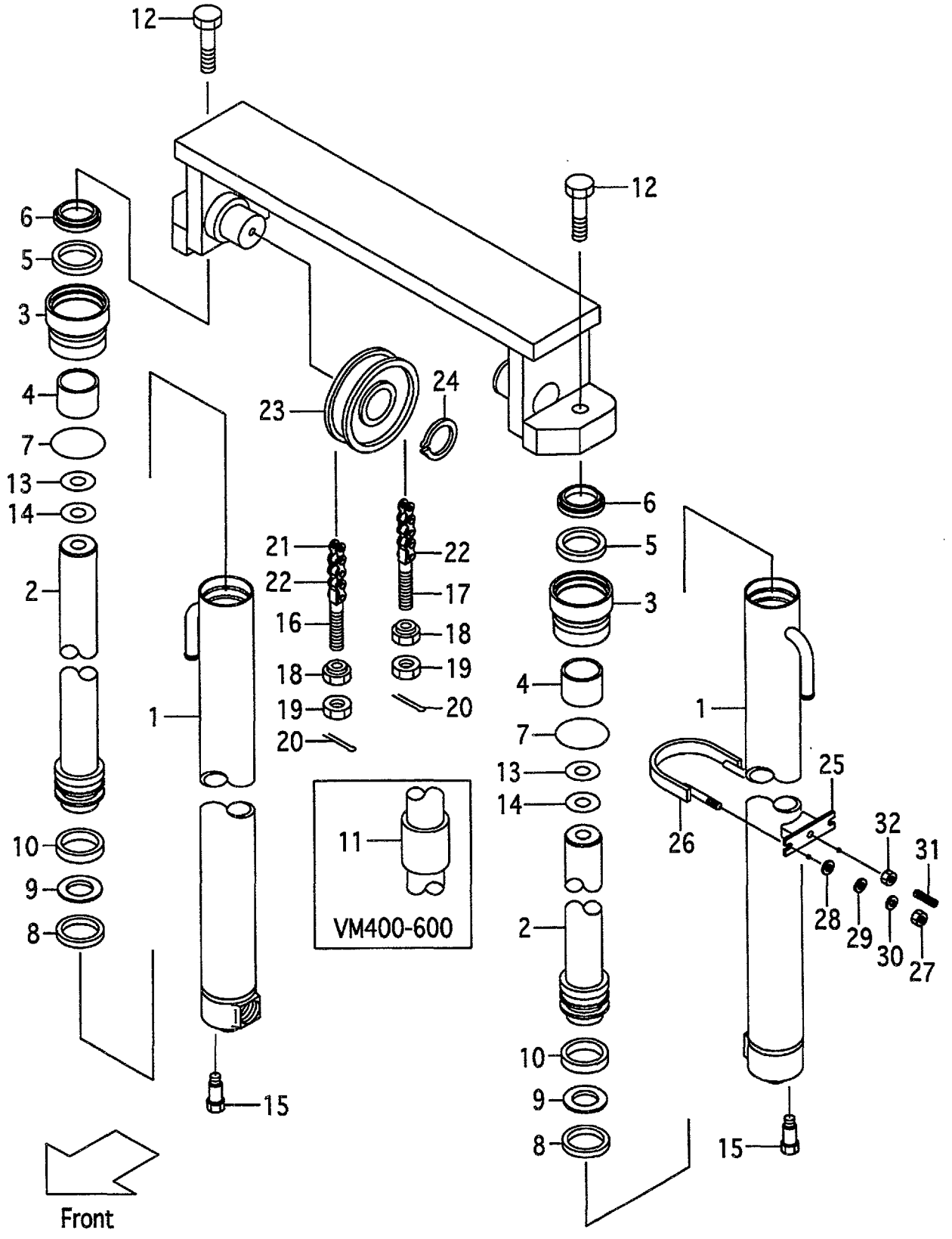

A:VM18G(0.9t)
B:VM18G(1.0t)
C:VM18G(1.5t)

FIG.182
(M5018410)

Item No	Part No.	Mark	Description		Req'd	Remarks : Serial No.
-	B-B6527-64802		ROD,PISTON VM400	ﾛｯﾄﾞ	2	
-	B-B6537-89402		ROD,PISTON VM425	ﾛｯﾄﾞ	2	
-	B-B6527-65002		ROD,PISTON VM450	ﾛｯﾄﾞ	2	
-	B-B6537-89602		ROD,PISTON VM475	ﾛｯﾄﾞ	2	
-	B-B6527-65302		ROD,PISTON VM500	ﾛｯﾄﾞ	2	
-	B-B6527-63502		ROD,PISTON VM550	ﾛｯﾄﾞ	2	
-	B-B6537-89902		ROD,PISTON VM600	ﾛｯﾄﾞ	2	
3	B-30121-45018	*	CAP	ｷｬｯﾌﾟ	2	
4	B-30131-35017	*	BUSHING	ﾌﾞｯｼﾝｸﾞ	2	
5	B-30961-03512	*	U-RING	Uﾘﾝｸﾞ	2	
6	B-30191-35025	*	RING,WIPER	ﾘﾝｸﾞ	2	
7	B-30161-91773	*	O-RING	Oﾘﾝｸﾞ	2	
8	B-30161-45046	*	U-RING	Uﾘﾝｸﾞ	2	
9	B-30461-45039	*	RING	ﾘﾝｸﾞ	2	
10	B-30131-45018		BUSHING	ﾌﾞｯｼﾝｸﾞ	2	
11	B-30111-35012		SPACER VM400	ｽﾍﾟｰｻ	2	
-	B-30111-35012		SPACER VM425	ｽﾍﾟｰｻ	2	
-	B-30111-35012		SPACER VM450	ｽﾍﾟｰｻ	2	
-	B-30111-35012		SPACER VM475	ｽﾍﾟｰｻ	2	
-	B-30111-35012		SPACER VM500	ｽﾍﾟｰｻ	2	
-	B-30111-35008		SPACER VM550	ｽﾍﾟｰｻ	2	
-	B-30111-35008		SPACER VM600	ｽﾍﾟｰｻ	2	
12	01103-12035		BOLT	ﾎﾞﾙﾄ	2	
13	22717-40081		SHIM	ｼﾑ	4	
14	22517-40051		SHIM	ｼﾑ	4	
15	216G8-43151		BOLT	ﾎﾞﾙﾄ	2	
16	218G8-42501		PIN,ANCHOR	ﾋﾟﾝ	2	
-	510F5-54051		PIN,ANCHOR	ﾋﾟﾝ	2	B,C [FC][FCS35][FCS45][FCS55]
17	218G8-42511		PIN,ANCHOR	ﾋﾟﾝ	2	
-	510F5-54061		PIN,ANCHOR	ﾋﾟﾝ	2	B,C [FC][FCS35][FCS45][FCS55]
18	22118-40181		NUT	ﾅｯﾄ	4	
-	22118-40181		NUT	ﾅｯﾄ	4	B,C [FC][FCS35][FCS45][FCS55]
19	01400-00014		NUT	ﾅｯﾄ	4	
-	01400-00014		NUT	ﾅｯﾄ	4	B,C [FC][FCS35][FCS45][FCS55]
20	02200-03030		PIN	ﾋﾟﾝ	4	
-	02200-03030		PIN	ﾋﾟﾝ	4	B,C [FC][FCS35][FCS45][FCS55]
21	218G8-45791		CHAIN VM200	ﾁｪｰﾝ	2	
-	218G8-45871		CHAIN VM225	ﾁｪｰﾝ	2	
-	218G8-45951		CHAIN VM250	ﾁｪｰﾝ	2	
-	218G8-46011		CHAIN VM270	ﾁｪｰﾝ	2	
-	218G8-46031		CHAIN VM275	ﾁｪｰﾝ	2	
-	218G8-46111		CHAIN VM300	ﾁｪｰﾝ	2	
-	218G8-46191		CHAIN VM325	ﾁｪｰﾝ	2	
-	218G8-46211		CHAIN VM330	ﾁｪｰﾝ	2	
-	218G8-46271		CHAIN VM350	ﾁｪｰﾝ	2	

FIG.182 LIFT CYLINDER [VM18G]

(M5018410) リフトシリンダ

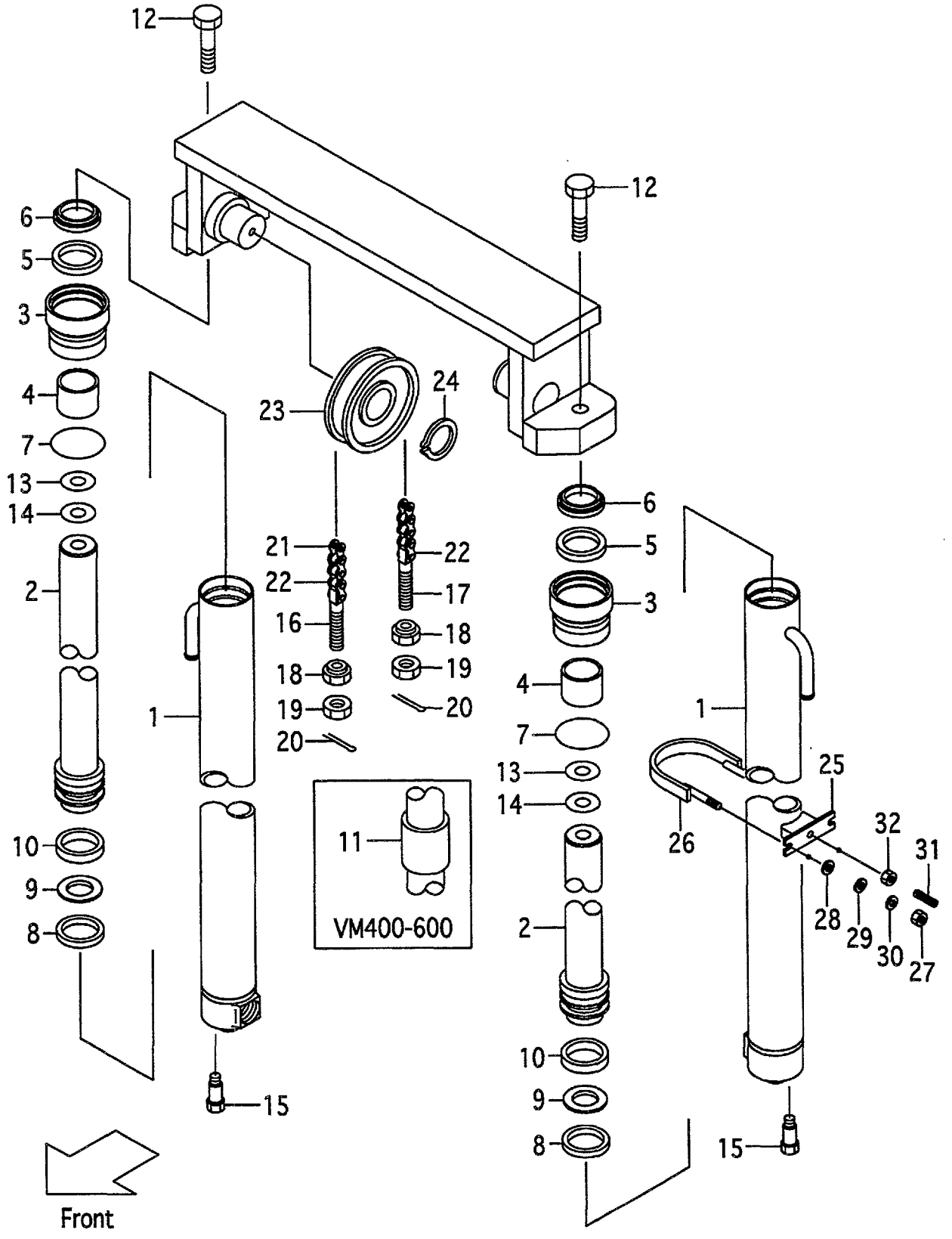

A:VM18G(0.9t)
B:VM18G(1.0t)
C:VM18G(1.5t)

FIG.182
(M5018410)

Item No	Part No.	Mark	Description		Req'd	Remarks : Serial No.
-	218G8-46311		CHAIN VM366	ﾁｪｰﾝ	2	
-	218G8-46331		CHAIN VM370	ﾁｪｰﾝ	2	
-	218G8-46351		CHAIN VM375	ﾁｪｰﾝ	2	
-	218G8-46451		CHAIN VM400	ﾁｪｰﾝ	2	
-	218G8-46531		CHAIN VM425	ﾁｪｰﾝ	2	
-	218G8-46611		CHAIN VM450	ﾁｪｰﾝ	2	
-	218G8-46691		CHAIN VM475	ﾁｪｰﾝ	2	
-	218G8-46771		CHAIN VM500	ﾁｪｰﾝ	2	
-	218G8-46971		CHAIN VM550	ﾁｪｰﾝ	2	
-	218G8-47111		CHAIN VM600	ﾁｪｰﾝ	2	
-	09001-08051		CHAIN VM200	ﾁｪｰﾝ	2	B,C [FC][FCS35][FCS45][FCS55]
-	09001-08055		CHAIN VM225	ﾁｪｰﾝ	2	B,C [FC][FCS35][FCS45][FCS55]
-	09001-08061		CHAIN VM250	ﾁｪｰﾝ	2	B,C [FC][FCS35][FCS45][FCS55]
-	09001-08065		CHAIN VM270	ﾁｪｰﾝ	2	B,C [FC][FCS35][FCS45][FCS55]
-	09001-08065		CHAIN VM275	ﾁｪｰﾝ	2	B,C [FC][FCS35][FCS45][FCS55]
-	09001-08071		CHAIN VM300	ﾁｪｰﾝ	2	B,C [FC][FCS35][FCS45][FCS55]
-	09001-08075		CHAIN VM325	ﾁｪｰﾝ	2	B,C [FC][FCS35][FCS45][FCS55]
-	09001-08077		CHAIN VM330	ﾁｪｰﾝ	2	B,C [FC][FCS35][FCS45][FCS55]
-	09001-08081		CHAIN VM350	ﾁｪｰﾝ	2	B,C [FC][FCS35][FCS45][FCS55]
-	09001-08083		CHAIN VM366	ﾁｪｰﾝ	2	B,C [FC][FCS35][FCS45][FCS55]
-	09001-08085		CHAIN VM370	ﾁｪｰﾝ	2	B,C [FC][FCS35][FCS45][FCS55]
-	09001-08085		CHAIN VM375	ﾁｪｰﾝ	2	B,C [FC][FCS35][FCS45][FCS55]
-	09001-08093		CHAIN VM400	ﾁｪｰﾝ	2	B,C [FC][FCS35][FCS45][FCS55]
-	09001-08097		CHAIN VM425	ﾁｪｰﾝ	2	B,C [FC][FCS35][FCS45][FCS55]
-	09001-08103		CHAIN VM450	ﾁｪｰﾝ	2	B,C [FC][FCS35][FCS45][FCS55]
-	09001-08107		CHAIN VM475	ﾁｪｰﾝ	2	B,C [FC][FCS35][FCS45][FCS55]
-	09001-08113		CHAIN VM500	ﾁｪｰﾝ	2	B,C [FC][FCS35][FCS45][FCS55]
-	09001-08123		CHAIN VM550	ﾁｪｰﾝ	2	B,C [FC][FCS35][FCS45][FCS55]
-	09001-08133		CHAIN VM600	ﾁｪｰﾝ	2	B,C [FC][FCS35][FCS45][FCS55]
22	218G8-42701		LINK	ﾘﾝｸ	2	
23	216G8-42031		SHEAVE	ｼｰﾌﾞ	2	

FIG.182 LIFT CYLINDER [VM18G]

(M5018410) リフトシリンダ

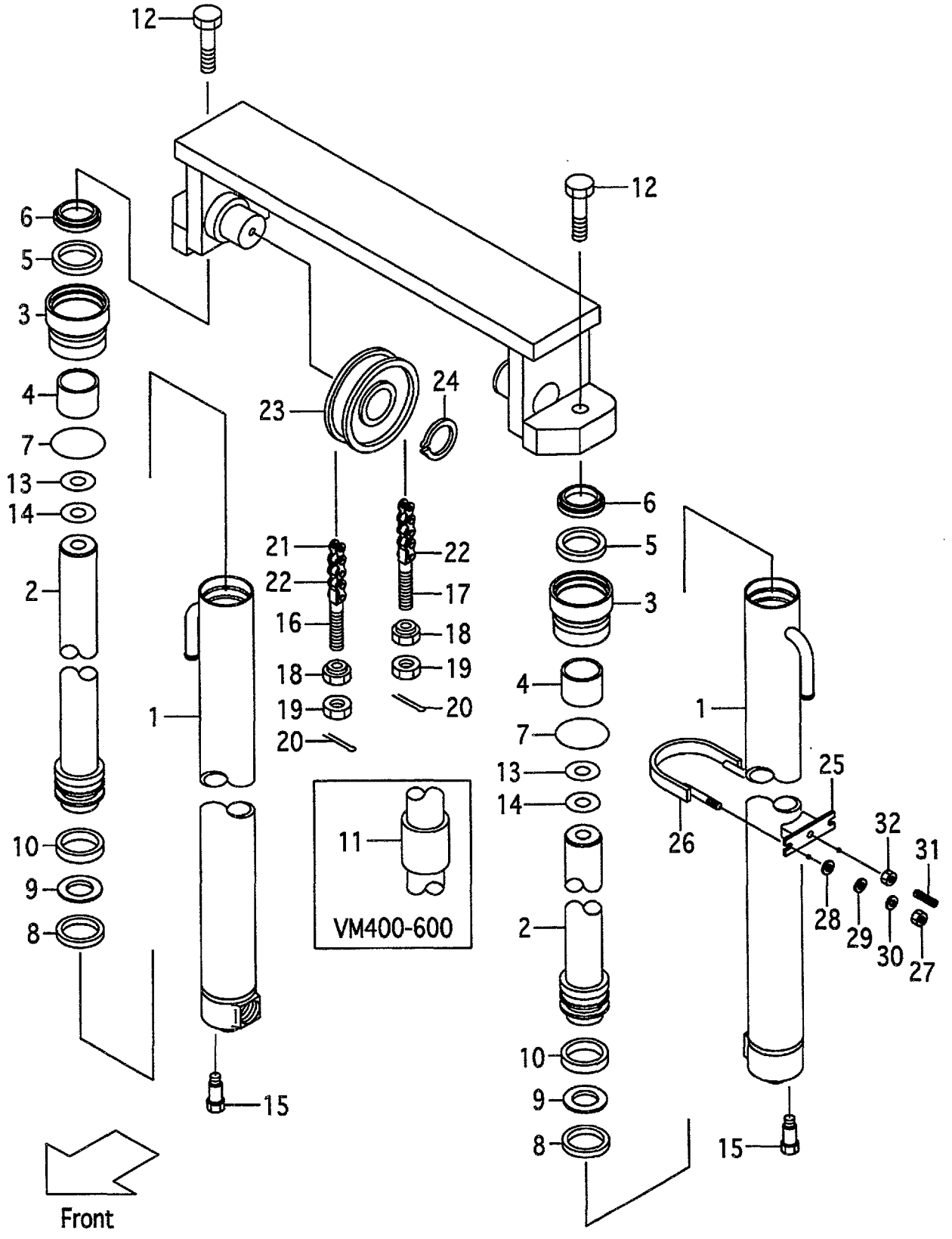

A:VM18G(0.9t)
B:VM18G(1.0t)
C:VM18G(1.5t)

FIG.182
(M5018410)

Item No	Part No.	Mark	Description		Req'd	Remarks : Serial No.
-	516G3-74001		SHEAVE	ｼｰﾌﾞ	2	B,C [FC][FCS35][FCS45][FCS55]
24	02100-00035		RING,SNAP	ｽﾅｯﾌﾟﾘﾝｸﾞ	2	
-	02100-00035		RING,SNAP	ｽﾅｯﾌﾟﾘﾝｸﾞ	2	B,C [FC][FCS35][FCS45][FCS55]
25	280B8-42031		SUPPORT	ｻﾎﾟｰﾄ	2	
26	280B8-42001		U-BOLT	Uﾎﾞﾙﾄ	2	
27	278R0-63151		NUT	ﾅｯﾄ	4	
28	02000-00010		WASHER	ﾜｯｼｬ	4	
29	02000-00008		WASHER	ﾜｯｼｬ	4	
30	02010-00008		WASHER	ﾜｯｼｬ	4	
31	215E8-42241		PLUG	ﾌﾟﾗｸﾞ	2	
32	234A8-42571		NUT	ﾅｯﾄ	2	
K1	B-3045A-00020		KIT,REPAIR	ﾘﾍﾟｱｷｯﾄ	2	INC.5-9
K2	B-3045B-00026		KIT,HEAD	ﾍｯﾄﾞｷｯﾄ	2	INC.3,4

FIG.183 MAST PIPING [VM18G]

(M5018420) ﾏｽﾄﾊﾟｲﾋﾟﾝｸﾞ

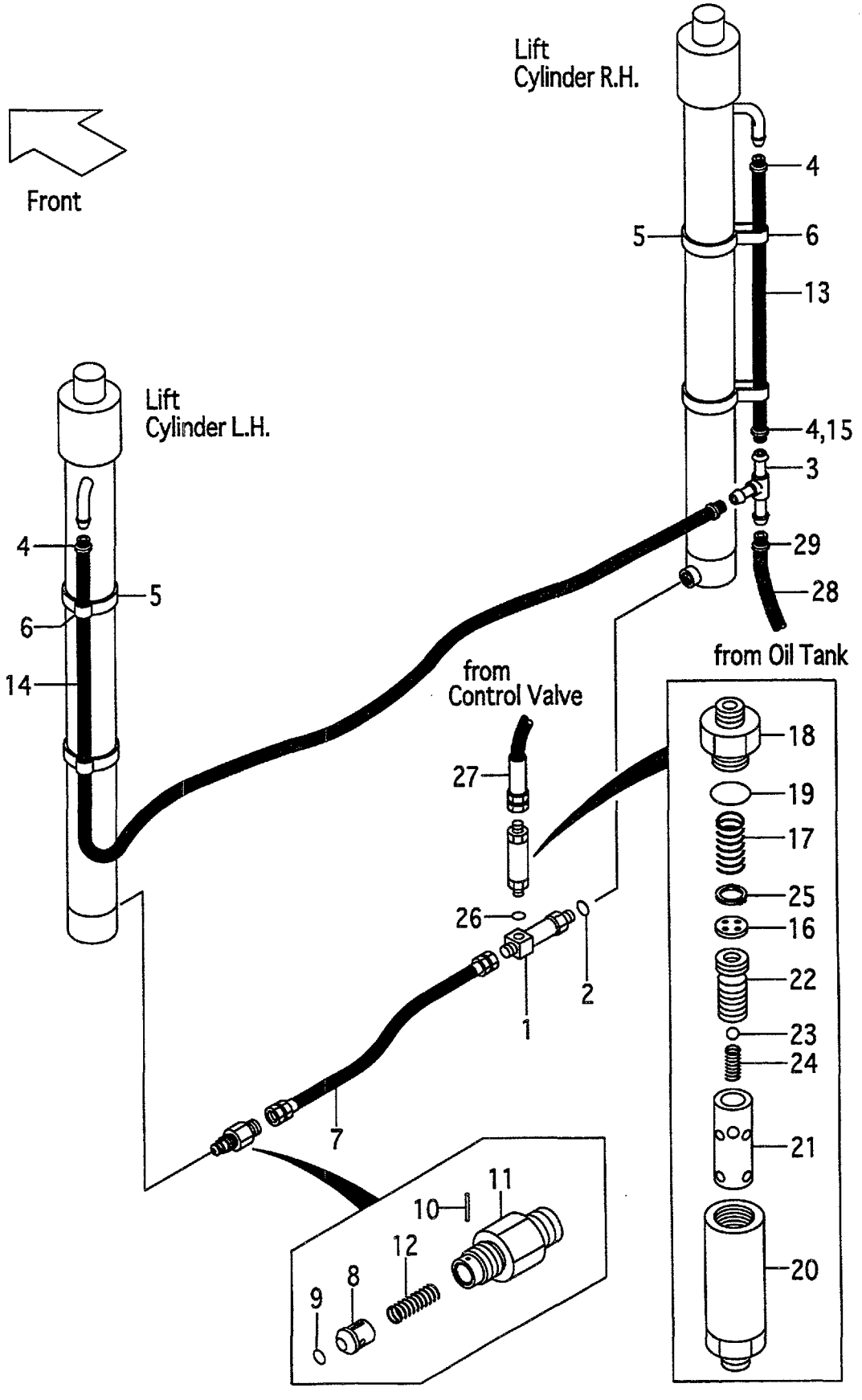

A:VM18G(0.9t)
B:VM18G(1.0t)
C:VM18G(1.5t)

FIG.183
(M5018420)

Item No	Part No.	Mark	Description		Req'd	Remarks : Serial No.
1	234A8-43051		THREE-WAY	ｽﾘｰｳｪｲ	1	
2	03320-00140		O-RING	Oﾘﾝｸﾞ	1	
3	23679-45051		THREE-WAY	ｽﾘｰｳｪｲ	1	
-	53675-55051		THREE-WAY	ｽﾘｰｳｪｲ	1	B,C [FC][RTL]
4	04911-00018		CLIP	ｸﾘｯﾌﾟ	4	
-	24329-46201		CLIP	ｸﾘｯﾌﾟ	2	B,C [FC][RTL]
5	04913-21380		BAND	ﾊﾞﾝﾄﾞ	4	
6	23678-42401		BAND,HOSE	ﾊﾞﾝﾄﾞ	4	
-	53675-54101		BAND	ﾊﾞﾝﾄﾞ	4	B,C [FC][RTL]
7	216G8-43501		HOSE	ﾎｰｽ	1	
A1	216G0-93201		VALVE-ASSY,CUT	ｶｯﾄﾊﾞﾙﾌﾞｱｯｾﾝ	1	INC.8-12
8	216G0-93211		PISTON	ﾋﾟｽﾄﾝ	1	
9	03320-00140		O-RING	Oﾘﾝｸﾞ	1	
10	02270-01014		PIN	ﾋﾟﾝ	1	
11	234A8-42621		NIPPLE	ﾆｯﾌﾟﾙ	1	
12	234A8-42611		SPRING	ｽﾌﾟﾘﾝｸﾞ	1	
13	23678-40075		HOSE VM200	ﾎｰｽ	1	
-	23678-40085		HOSE VM225	ﾎｰｽ	1	
-	23678-40100		HOSE VM250	ﾎｰｽ	1	
-	23678-40110		HOSE	ﾎｰｽ	1	[VM270][VM275]
-	23678-40125		HOSE VM300	ﾎｰｽ	1	
-	23678-40135		HOSE VM325	ﾎｰｽ	1	
-	23678-40140		HOSE VM330	ﾎｰｽ	1	
-	23678-40150		HOSE VM350	ﾎｰｽ	1	
-	23678-40160		HOSE	ﾎｰｽ	1	[VM366-375]
-	23678-40180		HOSE VM400	ﾎｰｽ	1	
-	23678-40190		HOSE VM425	ﾎｰｽ	1	
-	23678-40205		HOSE VM450	ﾎｰｽ	1	
-	23678-40215		HOSE VM475	ﾎｰｽ	1	
-	23678-40230		HOSE VM500	ﾎｰｽ	1	
-	23678-40260		HOSE VM550	ﾎｰｽ	1	
-	23678-40285		HOSE VM600	ﾎｰｽ	1	
-	04710-04075		HOSE VM200	ﾎｰｽ	1	B,C [FC][RTL]
-	04710-04085		HOSE VM225	ﾎｰｽ	1	B,C [FC][RTL]
-	04710-04100		HOSE VM250	ﾎｰｽ	1	B,C [FC][RTL]
-	04710-04110		HOSE VM270	ﾎｰｽ	1	B,C [FC][RTL]
-	04710-04110		HOSE VM275	ﾎｰｽ	1	B,C [FC][RTL]
-	04710-04125		HOSE VM300	ﾎｰｽ	1	B,C [FC][RTL]
-	04710-04135		HOSE VM325	ﾎｰｽ	1	B,C [FC][RTL]

FIG.183 MAST PIPING [VM18G]

(M5018420) ﾏｽﾄﾊﾟｲﾋﾟﾝｸﾞ

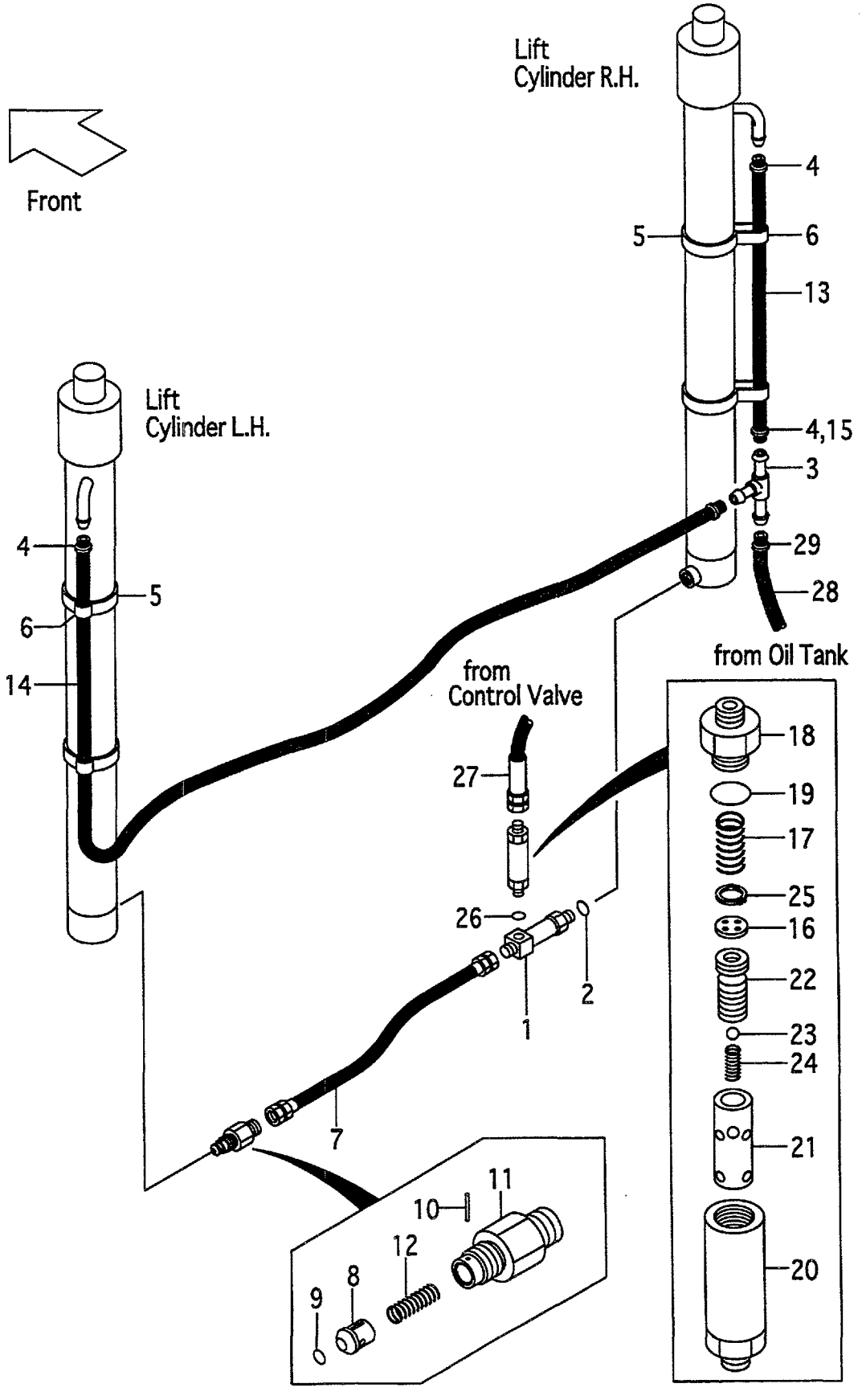

A:VM18G(0.9t)
B:VM18G(1.0t)
C:VM18G(1.5t)

FIG.183
(M5018420)

Item No	Part No.	Mark	Description	Req'd	Remarks : Serial No.
-	04710-04140		HOSE VM330 ホース	1	B,C [FC][RTL]
-	04710-04150		HOSE VM350 ホース	1	B,C [FC][RTL]
-	04710-04160		HOSE VM366 ホース	1	B,C [FC][RTL]
-	04710-04160		HOSE VM370 ホース	1	B,C [FC][RTL]
-	04710-04160		HOSE VM375 ホース	1	B,C [FC][RTL]
-	04710-04180		HOSE VM400 ホース	1	B,C [FC][RTL]
-	04710-04190		HOSE VM425 ホース	1	B,C [FC][RTL]
-	04710-04205		HOSE VM450 ホース	1	B,C [FC][RTL]
-	04710-04215		HOSE VM475 ホース	1	B,C [FC][RTL]
-	04710-04230		HOSE VM500 ホース	1	B,C [FC][RTL]
-	04710-04260		HOSE VM550 ホース	1	B,C [FC][RTL]
-	04710-04285		HOSE VM600 ホース	1	B,C [FC][RTL]
14	23678-40130		HOSE VM200 ホース	1	
-	23678-40140		HOSE VM225 ホース	1	
-	23678-40155		HOSE VM250 ホース	1	
-	23678-40165		HOSE ホース	1	[VM270][VM275]
-	23678-40175		HOSE VM300 ホース	1	
-	23678-40190		HOSE VM325 ホース	1	
-	23678-40195		HOSE VM330 ホース	1	
-	23678-40205		HOSE VM350 ホース	1	
-	23678-40215		HOSE ホース	1	[VM366-375]
-	23678-40235		HOSE VM400 ホース	1	
-	23678-40245		HOSE VM425 ホース	1	
-	23678-40260		HOSE VM450 ホース	1	
-	23678-40270		HOSE VM475 ホース	1	
-	23678-40285		HOSE VM500 ホース	1	
-	23678-40315		HOSE VM550 ホース	1	
-	23678-40340		HOSE VM600 ホース	1	
-	04710-04130		HOSE VM200 ホース	1	B,C [FC][RTL]
-	04710-04140		HOSE VM225 ホース	1	B,C [FC][RTL]
-	04710-04155		HOSE VM250 ホース	1	B,C [FC][RTL]
-	04710-04165		HOSE VM270 ホース	1	B,C [FC][RTL]
-	04710-04165		HOSE VM275 ホース	1	B,C [FC][RTL]

FIG.183 MAST PIPING [VM18G]

(M5018420) ﾏｽﾄﾊﾟｲﾋﾟﾝｸﾞ

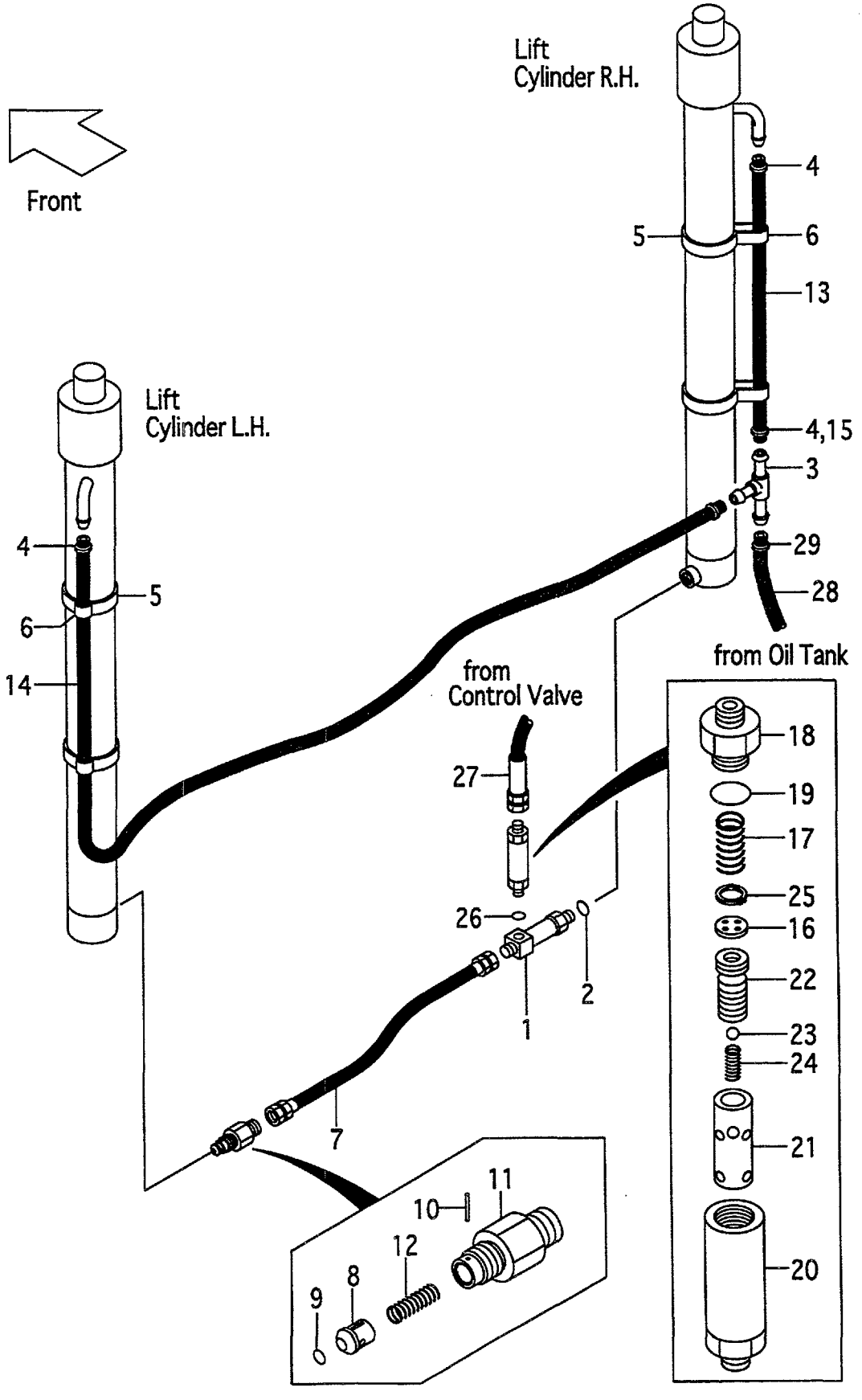

A:VM18G(0.9t)
B:VM18G(1.0t)
C:VM18G(1.5t)

FIG.183
(M5018420)

Item No	Part No.	Mark	Description		Req'd	Remarks : Serial No.
-	04710-04175		HOSE VM300	ﾎｰｽ	1	B,C [FC][RTL]
-	04710-04190		HOSE VM325	ﾎｰｽ	1	B,C [FC][RTL]
-	04710-04195		HOSE VM330	ﾎｰｽ	1	B,C [FC][RTL]
-	04710-04205		HOSE VM350	ﾎｰｽ	1	B,C [FC][RTL]
-	04710-04215		HOSE VM366	ﾎｰｽ	1	B,C [FC][RTL]
-	04710-04215		HOSE VM370	ﾎｰｽ	1	B,C [FC][RTL]
-	04710-04215		HOSE VM375	ﾎｰｽ	1	B,C [FC][RTL]
-	04710-04235		HOSE VM400	ﾎｰｽ	1	B,C [FC][RTL]
-	04710-04245		HOSE VM425	ﾎｰｽ	1	B,C [FC][RTL]
-	04710-04260		HOSE VM450	ﾎｰｽ	1	B,C [FC][RTL]
-	04710-04270		HOSE VM475	ﾎｰｽ	1	B,C [FC][RTL]
-	04710-04285		HOSE VM500	ﾎｰｽ	1	B,C [FC][RTL]
-	04710-04315		HOSE VM550	ﾎｰｽ	1	B,C [FC][RTL]
-	04710-04340		HOSE VM600	ﾎｰｽ	1	B,C [FC][RTL]
15	04911-00021		CLIP	ｸﾘｯﾌﾟ	2	B,C [FC][RTL]
A2	216G8-41001		REGULATOR-ASSY	ﾚｷﾞｭﾚｰﾀｱｯｾﾝ	1	INC.16-25
16	210F8-43031		PLATE	ﾌﾟﾚｰﾄ	1	
17	27979-43101		SPRING	ｽﾌﾟﾘﾝｸﾞ	1	
18	216G8-42121		NIPPLE	ﾆｯﾌﾟﾙ	1	
19	03300-00280		O-RING	Oﾘﾝｸﾞ	1	
20	214A8-43011		CASE	ｹｰｽ	1	
21	216G8-42111		SLEEVE	ｽﾘｰﾌﾞ	1	
22	24459-42921		PISTON	ﾋﾟｽﾄﾝ	1	
23	24459-42951		BALL,NYLON	ﾎﾞｰﾙ	1	
24	214A8-44151		SPRING	ｽﾌﾟﾘﾝｸﾞ	1	
25	02110-00018		RING,SNAP	ｽﾅｯﾌﾟﾘﾝｸﾞ	1	
26	03320-00180		O-RING	Oﾘﾝｸﾞ	1	
27	216G8-02502		HOSE	ﾎｰｽ	1	
-	216G8-02502		HOSE	ﾎｰｽ	1	B,C [FC][RTL]
28	23678-40095		HOSE	ﾎｰｽ	1	
-	04710-04110		HOSE	ﾎｰｽ	1	B,C [FC][RTL]
29	04911-00018		CLIP	ｸﾘｯﾌﾟ	1	
-	04914-00016		CLIP,TANK SIDE	ｸﾘｯﾌﾟ	1	

FIG.183 MAST PIPING [VM18G]

(M5018420) ﾏｽﾄﾊﾟｲﾋﾟﾝｸﾞ

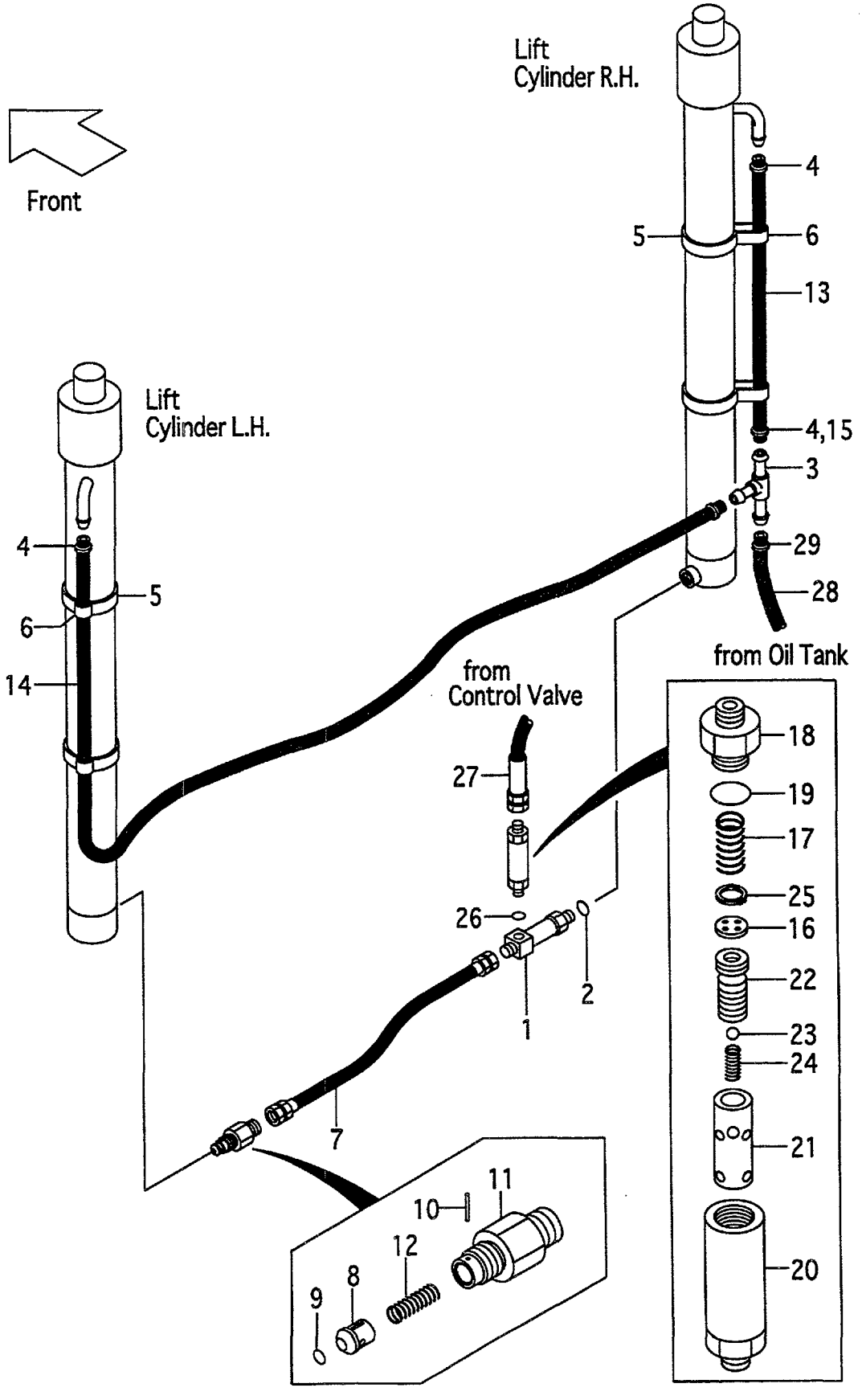

A:VM18G(0.9t)
B:VM18G(1.0t)
C:VM18G(1.5t)

FIG.183
(M5018420)

Item No	Part No.	Mark	Description	Req'd	Remarks : Serial No.
-	04911-00021		CLIP ｸﾘｯﾌﾟ	2	B,C [FC][RTL]

FIG.184 FORK [VM18J]

(M5018120) フォーク

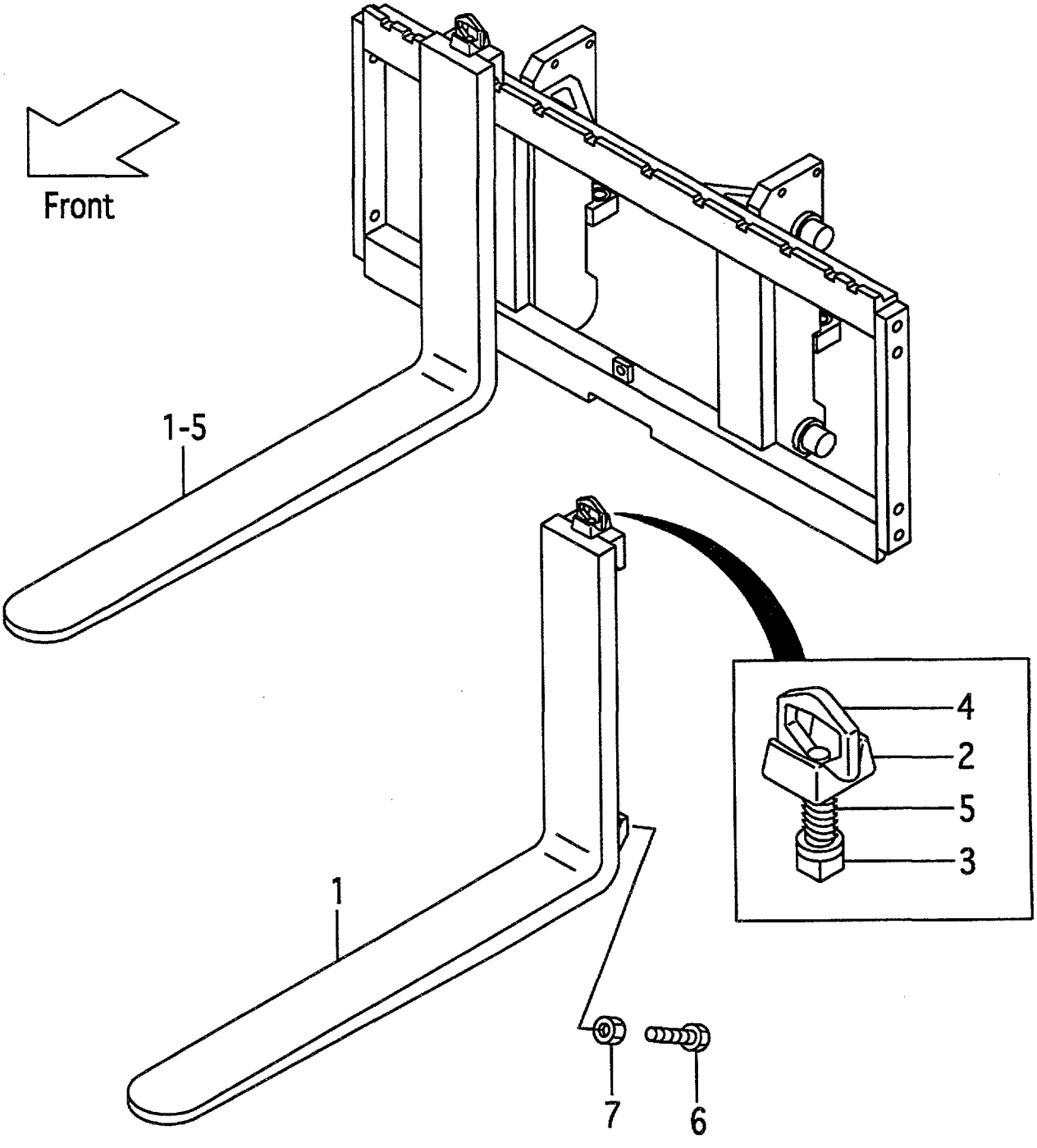

A:VM18J(1.8t)

Item No	Part No.	Mark	Description		Req'd	Remarks : Serial No.
1	210F8-10512		FORK	ﾌｫｰｸ	2	(L=920) INC.2-5
-	210F8-10502		FORK	ﾌｫｰｸ	2	[LF085] INC.2-5
-	210F8-10572		FORK	ﾌｫｰｸ	2	[LF090] INC.2-5
-	210F8-10512		FORK	ﾌｫｰｸ	2	[LF092] INC.2-5
-	210F8-10512		FORK	ﾌｫｰｸ	2	[EX] INC.2-5
-	210F8-10582		FORK	ﾌｫｰｸ	2	[LF100] INC.2-5
-	210F8-10522		FORK	ﾌｫｰｸ	2	[LF107] INC.2-5
-	210F8-10592		FORK	ﾌｫｰｸ	2	[LF110] INC.2-5
-	210F8-10602		FORK	ﾌｫｰｸ	2	[LF120] INC.2-5
-	210F8-10532		FORK	ﾌｫｰｸ	2	[LF122] INC.2-5
-	210H8-10612		FORK	ﾌｫｰｸ	2	[LF130] INC.2-5
-	210H8-10532		FORK	ﾌｫｰｸ	2	[LF137] INC.2-5
-	210H8-10622		FORK	ﾌｫｰｸ	2	[LF140] INC.2-5
-	210H8-10632		FORK	ﾌｫｰｸ	2	[LF150] INC.2-5
-	210H8-10542		FORK	ﾌｫｰｸ	2	[LF152] INC.2-5
-	210H8-10642		FORK	ﾌｫｰｸ	2	[LF160] INC.2-5
-	210H8-10552		FORK	ﾌｫｰｸ	2	[LF167] INC.2-5
-	216K8-10361		FORK	ﾌｫｰｸ	2	[LFD085] INC.2-5
-	216K8-10371		FORK	ﾌｫｰｸ	2	[LFD090] INC.2-5
-	216K8-10301		FORK	ﾌｫｰｸ	2	[LFD092] INC.2-5
-	216K8-10381		FORK	ﾌｫｰｸ	2	[LFD100] INC.2-5
-	216K8-10311		FORK	ﾌｫｰｸ	2	[LFD107] INC.2-5
-	216K8-10391		FORK	ﾌｫｰｸ	2	[LFD110] INC.2-5
-	216K8-10401		FORK	ﾌｫｰｸ	2	[LFD120] INC.2-5
-	216K8-10321		FORK	ﾌｫｰｸ	2	[LFD122] INC.2-5
-	216K8-10411		FORK	ﾌｫｰｸ	2	[LFD130] INC.2-5
-	216K8-10331		FORK	ﾌｫｰｸ	2	[LFD137] INC.2-5
-	216K8-10421		FORK	ﾌｫｰｸ	2	[LFD140] INC.2-5
-	216K8-10431		FORK	ﾌｫｰｸ	2	[LFD150] INC.2-5
-	216K8-10341		FORK	ﾌｫｰｸ	2	[LFD152] INC.2-5
-	216K8-10441		FORK	ﾌｫｰｸ	2	[LFD160] INC.2-5
-	216K8-10351		FORK	ﾌｫｰｸ	2	[LFD167] INC.2-5
A1	214A8-11001		STOPPER-ASSY	ｽﾄｯﾊﾟｱｯｾﾝ	2	INC.2-5
2	214A8-12001		HEAD	ﾍｯﾄﾞ	2	
3	214A8-12011		STOPPER	ｽﾄｯﾊﾟ	2	
4	214A8-12021		HANDLE	ﾊﾝﾄﾞﾙ	2	
5	214A8-12031		SPRING	ｽﾌﾟﾘﾝｸﾞ	2	
6	216G8-12101		BOLT	ﾎﾞﾙﾄ	4	[LFD]
7	01402-00010		NUT	ﾅｯﾄ	4	[LFD]

FIG.185 LIFT BRACKET [VM18J]

(M5018230) リフトブラケット

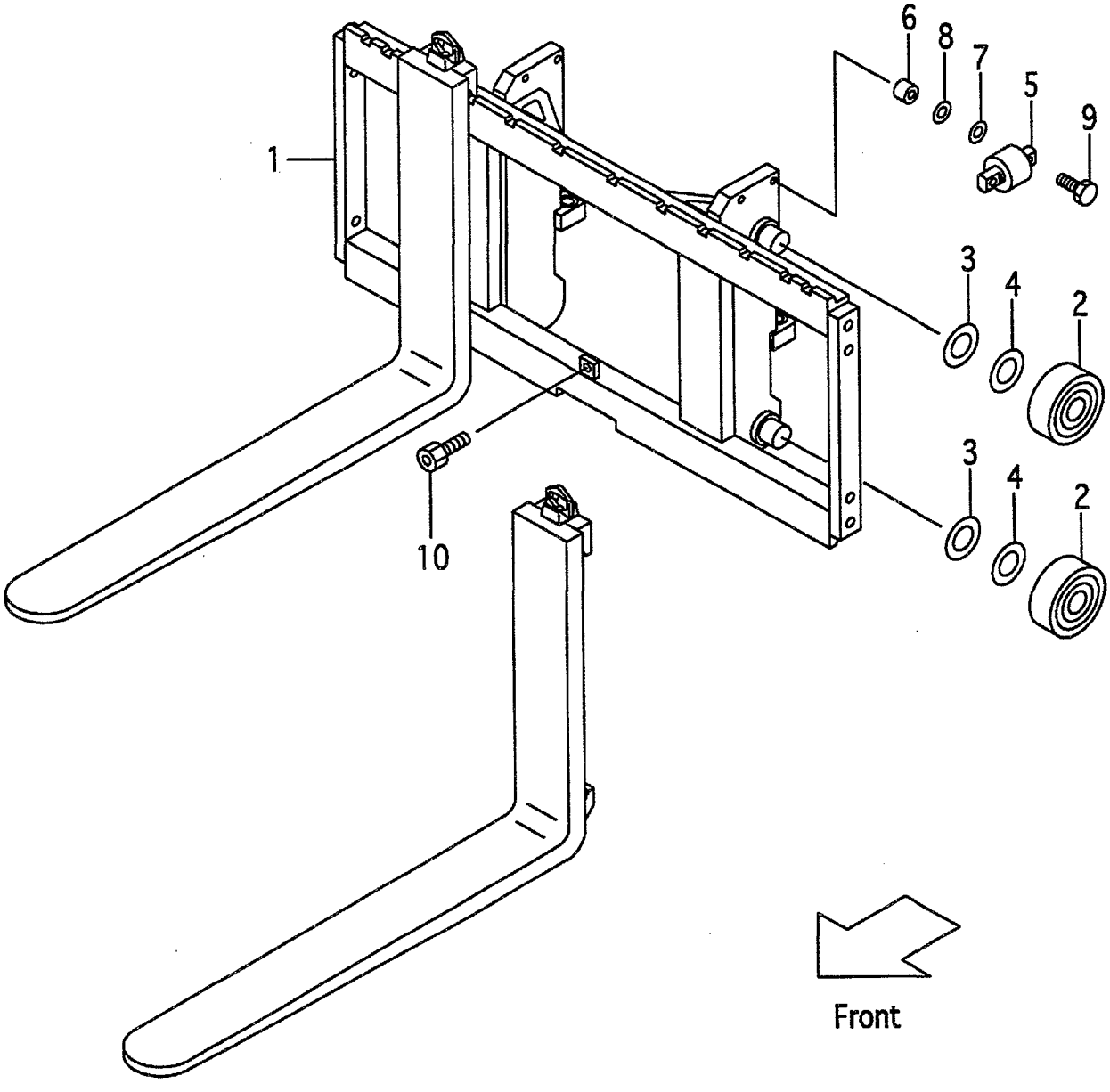

A:VM18J(1.8t)

Item No	Part No.	Mark	Description		Req'd	Remarks : Serial No.
1	218J8-20001		BRACKET,LIFT	ﾘﾌﾄﾌﾞﾗｹｯﾄ	1	
2	211F8-22201		ROLLER,END,102.0	ﾛｰﾗ	4	
-	211F8-22211		ROLLER,END,102.5	ﾛｰﾗ	(4)	
-	511F3-74021		ROLLER,END,102.0	ﾛｰﾗ	4	[FC][FCS35][FCS55][CS35] [CSA][FCS45]
-	511F3-74031		ROLLER,END,102.5	ﾛｰﾗ	(4)	[FC][FCS35][FCS55][CS35] [CSA][FCS45]
3	211F8-22261		SHIM,T-0.5	ｼﾑ	4	
-	211F8-22261		SHIM,T-0.5	ｼﾑ	4	[FC][FCS35][FCS55][CS35] [CSA][FCS45]
4	211F8-22271		SHIM,T-1.0	ｼﾑ	8	
-	211F8-22271		SHIM,T-1.0	ｼﾑ	8	[FC][FCS35][FCS55][CS35] [CSA][FCS45]
5	22018-30304		ROLLER,SIDE	ﾛｰﾗ	2	
-	510F3-74001		ROLLER,SIDE	ﾛｰﾗ	2	[FC][FCS35][FCS55][CS35] [CSA][FCS45]
6	22578-32841		SPACER	ｽﾍﾟｰｻ	4	
-	22578-32841		SPACER	ｽﾍﾟｰｻ	4	[FC][FCS35][FCS55][CS35] [CSA][FCS45]
7	22018-30261		SHIM	ｼﾑ	8	
-	22018-30261		SHIM	ｼﾑ	8	[FC][FCS35][FCS55][CS35] [CSA][FCS45]
8	22018-30121		SHIM	ｼﾑ	4	
-	22018-30121		SHIM	ｼﾑ	4	[FC][FCS35][FCS55][CS35] [CSA][FCS45]
9	01103-10050		BOLT & WASHER	ﾎﾞﾙﾄ & ﾜｯｼｬ	4	
10	01184-12025		BOLT & WASHER	ﾎﾞﾙﾄ & ﾜｯｼｬ	1	

FIG.186 BACKREST [VM18J]

(M5018240) ﾊﾞｯｸﾚｽﾄ

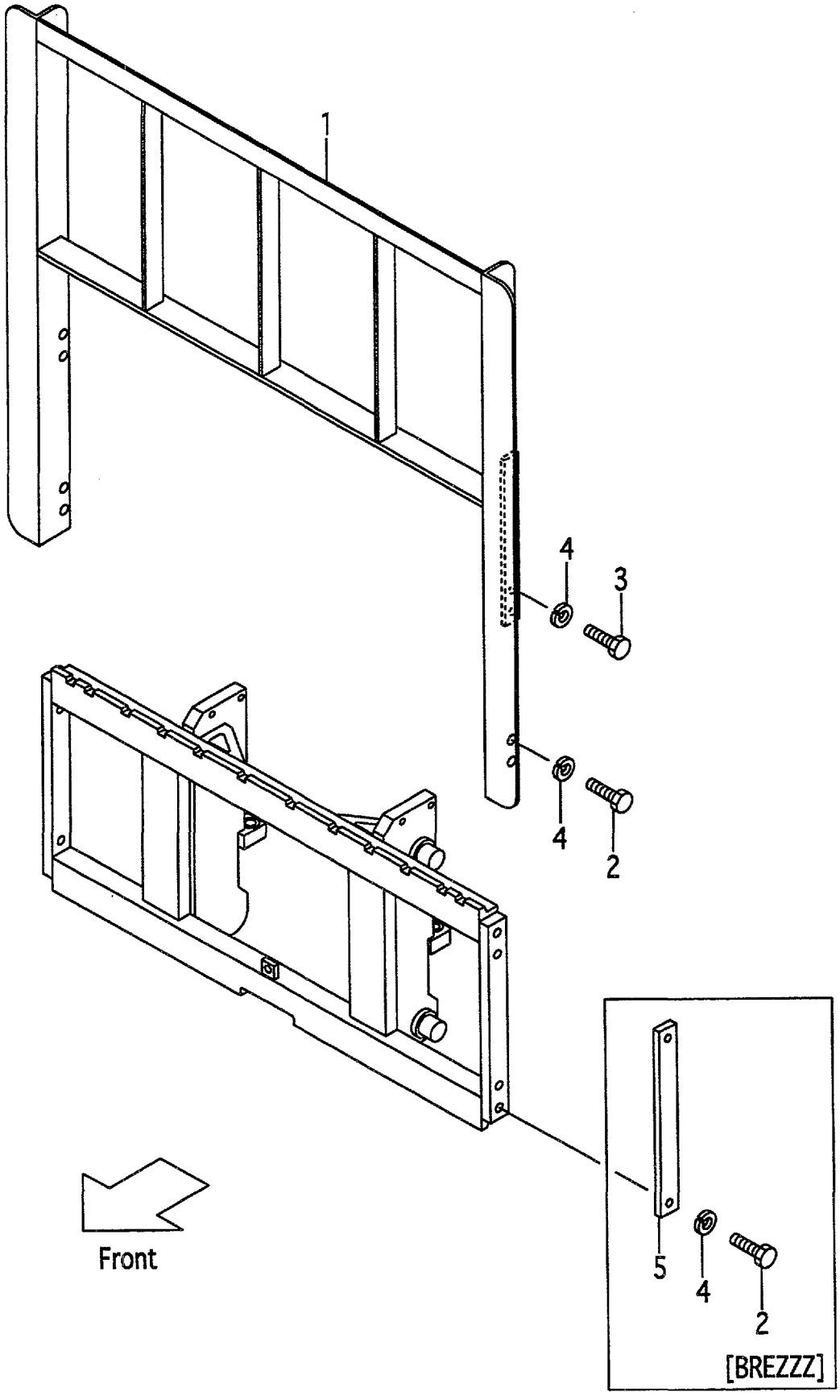

A:VM18J(1.8t)

Item No	Part No.	Mark	Description		Req'd	Remarks : Serial No.
1	216G8-22201		BACKREST	ﾊﾞｯｸﾚｽﾄ	1	
2	01100-14025		BOLT	ﾎﾞﾙﾄ	4	
-	01100-14025		BOLT	ﾎﾞﾙﾄ	4	[BREZZZ]
3	01100-14030		BOLT	ﾎﾞﾙﾄ	4	
4	02010-00014		WASHER	ﾜｯｼｬ	8	
-	02010-00014		WASHER	ﾜｯｼｬ	4	[BREZZZ]
5	23659-42161		PLATE	ﾌﾟﾚｰﾄ	2	[BREZZZ]

FIG.187 MAST [VM18J]

(M5018320) マスト

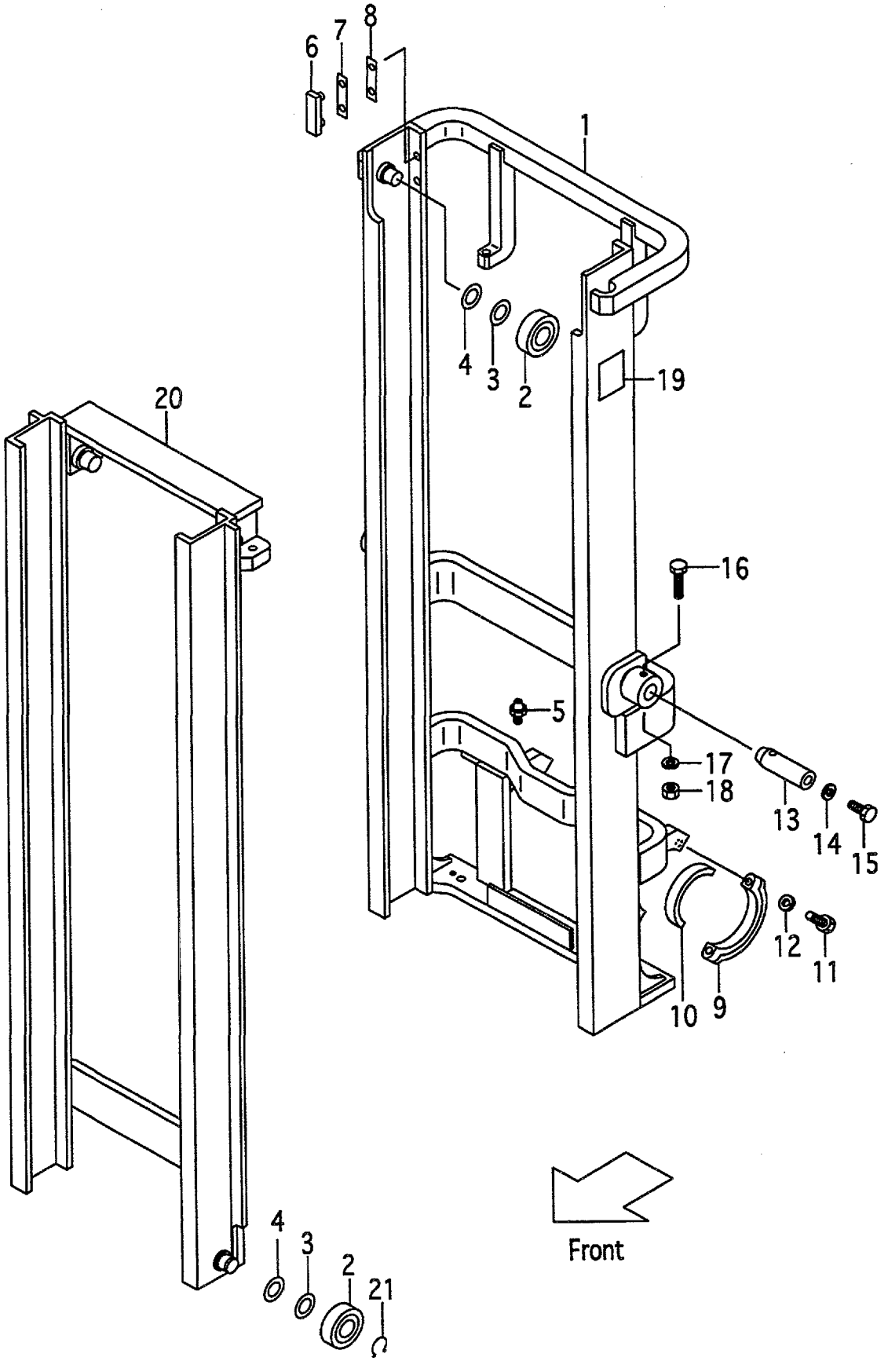

A:VM18J(1.8t)

Item No	Part No.	Mark	Description		Req'd	Remarks : Serial No.
1	218G8-30211		MAST,OUTER VM200	ｱｳﾀﾏｽﾄ	1	
-	218G8-30221		MAST,OUTER VM225	ｱｳﾀﾏｽﾄ	1	
-	218G8-30231		MAST,OUTER VM250	ｱｳﾀﾏｽﾄ	1	
-	218G8-30241		MAST,OUTER VM270	ｱｳﾀﾏｽﾄ	1	
-	218G8-30251		MAST,OUTER VM275	ｱｳﾀﾏｽﾄ	1	
-	218G8-30201		MAST,OUTER VM300	ｱｳﾀﾏｽﾄ	1	
-	218G8-30261		MAST,OUTER VM325	ｱｳﾀﾏｽﾄ	1	
-	218G8-30271		MAST,OUTER VM330	ｱｳﾀﾏｽﾄ	1	
-	218E8-30281		MAST,OUTER VM350	ｱｳﾀﾏｽﾄ	1	
-	218G8-30291		MAST,OUTER VM366	ｱｳﾀﾏｽﾄ	1	
-	218G8-30301		MAST,OUTER VM370	ｱｳﾀﾏｽﾄ	1	
-	218G8-30311		MAST,OUTER VM375	ｱｳﾀﾏｽﾄ	1	
-	218G8-30321		MAST,OUTER VM400	ｱｳﾀﾏｽﾄ	1	
-	218G8-30331		MAST,OUTER VM425	ｱｳﾀﾏｽﾄ	1	
-	218G8-30341		MAST,OUTER VM450	ｱｳﾀﾏｽﾄ	1	
-	218G8-30351		MAST,OUTER VM475	ｱｳﾀﾏｽﾄ	1	
-	218G8-30361		MAST,OUTER VM500	ｱｳﾀﾏｽﾄ	1	
-	218G8-30371		MAST,OUTER VM550	ｱｳﾀﾏｽﾄ	1	
-	218G8-30381		MAST,OUTER VM600	ｱｳﾀﾏｽﾄ	1	
2	211F8-22221		ROLLER,END,102.0	ﾛｰﾗ	2	
-	211F8-22231		ROLLER,END,102.5	ﾛｰﾗ	(2)	
-	511F3-74021		ROLLER,END,102.0	ﾛｰﾗ	2	[FC][FCS35][FCS55][CS35] [CSA][FCS45]
-	511F3-74031		ROLLER,END,102.5	ﾛｰﾗ	(2)	[FC][FCS35][FCS55][CS35] [CSA][FCS45]
-	211F8-22221		ROLLER,END,102.0	ﾛｰﾗ	2	
-	211F8-22231		ROLLER,END,102.5	ﾛｰﾗ	(2)	
-	511F3-74021		ROLLER,END,102.0	ﾛｰﾗ	2	[FCS35][FCS55][CS35] [FCS45]
-	511F3-74031		ROLLER,END,102.5	ﾛｰﾗ	(2)	[FCS35][FCS55][CS35] [FCS45]
3	211F8-22261		SHIM,T-0.5	ｼﾑ	4	[FC][FCS35][FCS55][CS35] [CSA][FCS45]
-	211F8-22261		SHIM,T-0.5	ｼﾑ	8	
-	211F8-22261		SHIM,T-0.5	ｼﾑ	4	[FCS35][FCS55][CS35] [FCS45]
4	211F8-22271		SHIM,T-1.0	ｼﾑ	8	[FC][FCS35][FCS55][CS35] [CSA][FCS45]
-	211F8-22271		SHIM,T-1.0	ｼﾑ	16	
-	211F8-22271		SHIM,T-1.0	ｼﾑ	8	[FCS35][FCS55][CS35] [FCS45]
5	04901-00100		FITTING	ﾌｨｯﾃｨﾝｸﾞ	2	
6	216G8-33401		SLIPPER	ｽﾘｯﾊﾟ	2	
7	216G8-33361		SHIM,T-0.5	ｼﾑ	8	
8	216G8-33371		SHIM,T-1.0	ｼﾑ	4	
9	210F6-12441		CAP	ｷｬｯﾌﾟ	2	
10	216G8-02001		BUSHING	ﾌﾞｯｼﾝｸﾞ	2	
11	01100-14065		BOLT	ﾎﾞﾙﾄ	4	
12	02010-00014		WASHER	ﾜｯｼｬ	4	
13	210F8-02102		PIN	ﾋﾟﾝ	2	

FIG.187 MAST [VM18J]

(M5018320) マスト

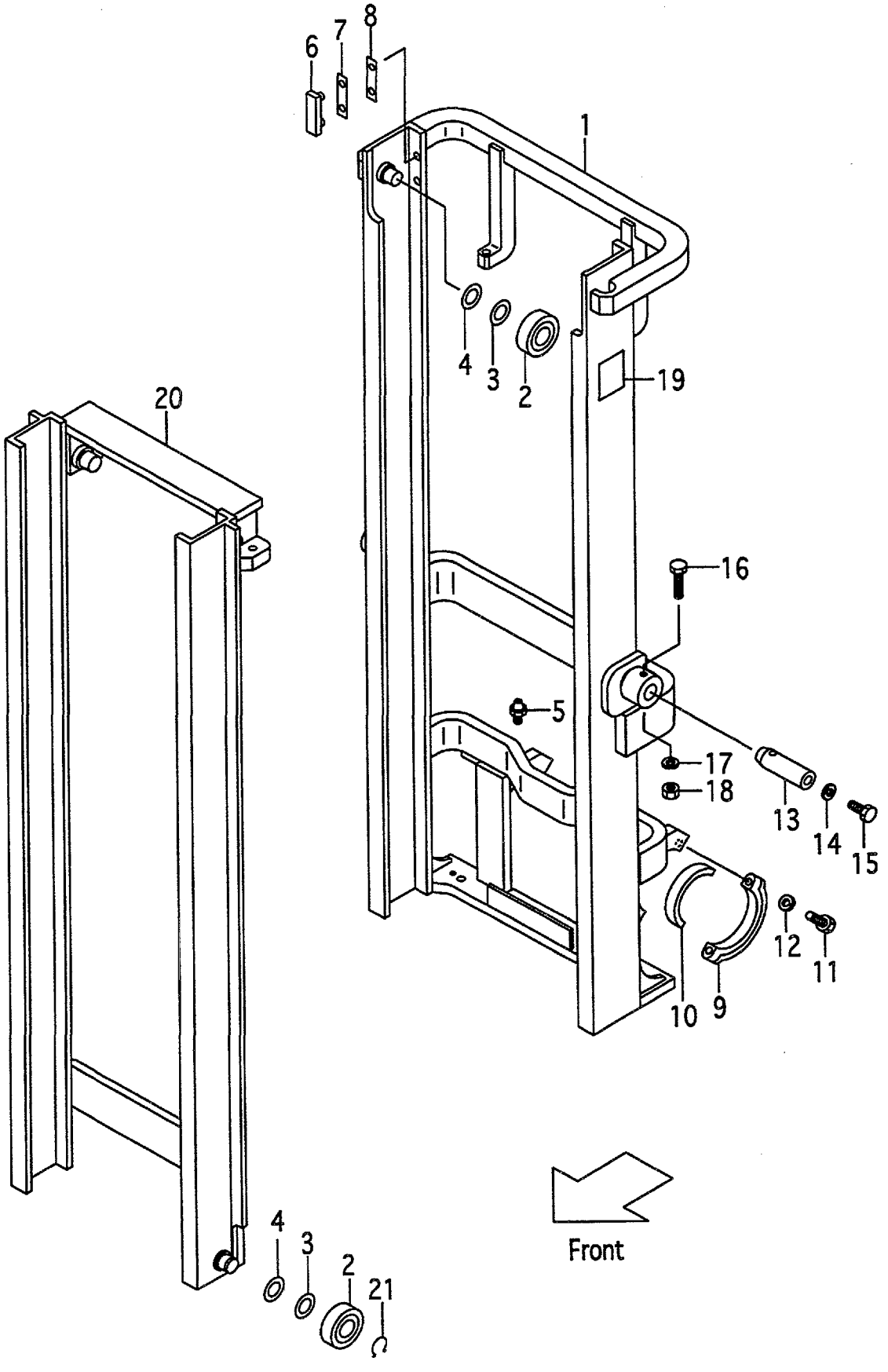

A:VM18J(1.8t)

Item No	Part No.	Mark	Description		Req'd	Remarks : Serial No.
14	216G8-52311		WASHER	ﾜｯｼｬ	2	
15	216G4-12251		BOLT	ﾎﾞﾙﾄ	2	
16	216G8-52321		BOLT	ﾎﾞﾙﾄ	2	
17	02010-20012		WASHER	ﾜｯｼｬ	2	
18	234A8-42571		NUT	ﾅｯﾄ	2	
19	23678-06002		PLATE,NAME	ﾌﾟﾚｰﾄ	1	
20	218G8-30411		MAST,INNER VM200	ｲﾝﾅﾏｽﾄ	1	
-	218G8-30421		MAST,INNER VM225	ｲﾝﾅﾏｽﾄ	1	
-	218G8-30431		MAST,INNER VM250	ｲﾝﾅﾏｽﾄ	1	
-	218G8-30441		MAST,INNER VM270	ｲﾝﾅﾏｽﾄ	1	
-	218G8-30451		MAST,INNER VM275	ｲﾝﾅﾏｽﾄ	1	
-	218G8-30401		MAST,INNER VM300	ｲﾝﾅﾏｽﾄ	1	
-	218G8-30461		MAST,INNER VM325	ｲﾝﾅﾏｽﾄ	1	
-	218G8-30471		MAST,INNER VM330	ｲﾝﾅﾏｽﾄ	1	
-	218G8-30481		MAST,INNER VM350	ｲﾝﾅﾏｽﾄ	1	
-	218G8-30491		MAST,INNER VM366	ｲﾝﾅﾏｽﾄ	1	
-	218G8-30501		MAST,INNER VM370	ｲﾝﾅﾏｽﾄ	1	
-	218G8-30511		MAST,INNER VM375	ｲﾝﾅﾏｽﾄ	1	
-	218G8-30521		MAST,INNER VM400	ｲﾝﾅﾏｽﾄ	1	
-	218G8-30531		MAST,INNER VM425	ｲﾝﾅﾏｽﾄ	1	
-	218G8-30541		MAST,INNER VM450	ｲﾝﾅﾏｽﾄ	1	
-	218G8-30551		MAST,INNER VM475	ｲﾝﾅﾏｽﾄ	1	
-	218G8-30561		MAST,INNER VM500	ｲﾝﾅﾏｽﾄ	1	
-	218G8-30571		MAST,INNER VM550	ｲﾝﾅﾏｽﾄ	1	
-	218G8-30581		MAST,INNER VM600	ｲﾝﾅﾏｽﾄ	1	
21	09192-30035		RING,SNAP	ｽﾅｯﾌﾟﾘﾝｸﾞ	2	
-	09192-30035		RING,SNAP	ｽﾅｯﾌﾟﾘﾝｸﾞ	2	[FC][FCS35][FCS55][CS35] [CSA][FCS45]

FIG.188 LIFT CYLINDER [VM18J]

(M5018430) リフトシリンダ

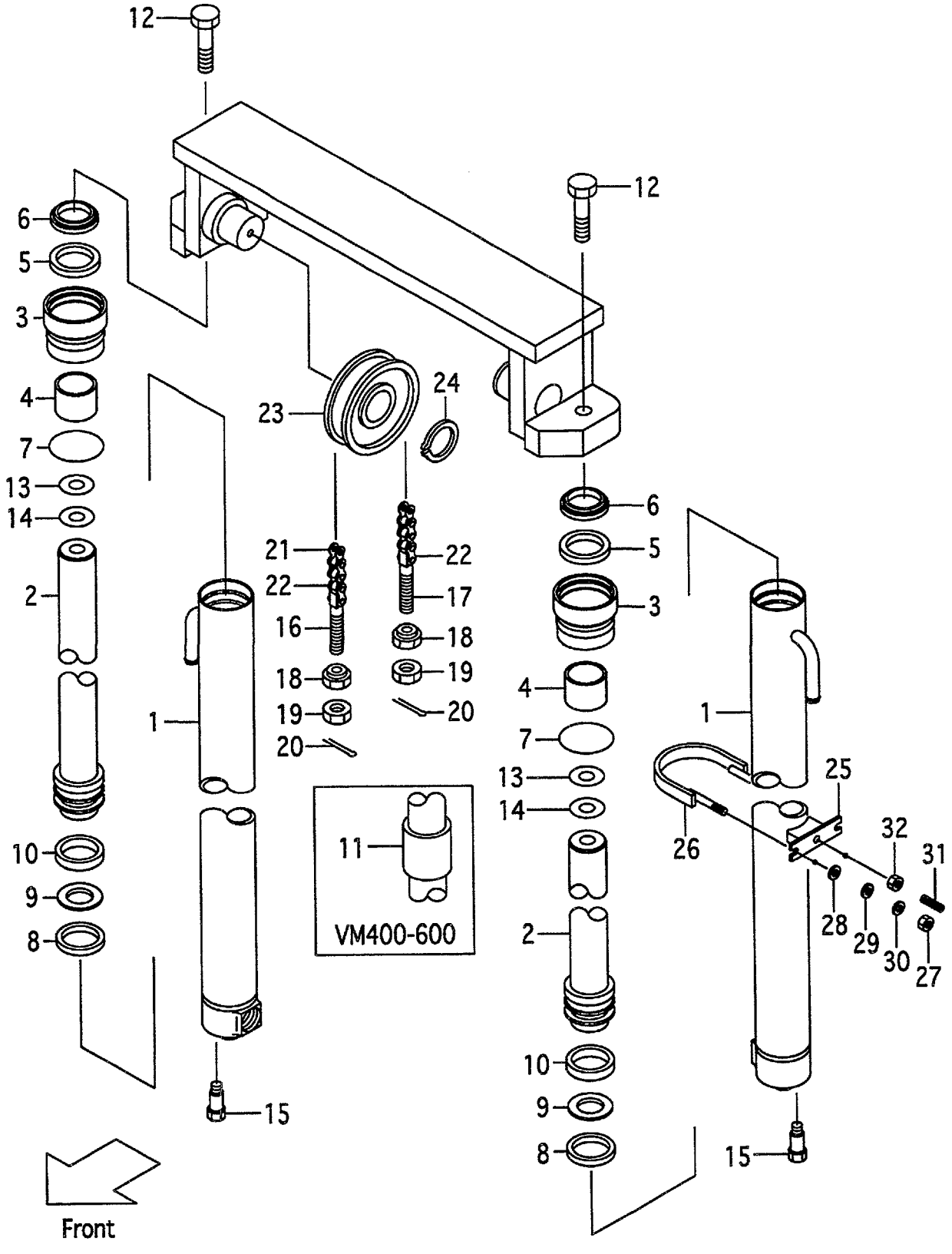

A:VM18J(1.8t)

Item No	Part No.	Mark	Description	Req'd	Remarks : Serial No.
A1	218G8-40011		CYL-ASSY,LIFT VM200 ﾘﾌﾄｼﾘﾝﾀﾞｱｯｾﾝ	2	INC.1-11
-	218G8-40021		CYL-ASSY,LIFT VM225 ﾘﾌﾄｼﾘﾝﾀﾞｱｯｾﾝ	2	INC.1-11
-	218G8-40031		CYL-ASSY,LIFT VM250 ﾘﾌﾄｼﾘﾝﾀﾞｱｯｾﾝ	2	INC.1-11
-	218G8-40041		CYL-ASSY,LIFT VM270 ﾘﾌﾄｼﾘﾝﾀﾞｱｯｾﾝ	2	INC.1-11
-	218G8-40051		CYL-ASSY,LIFT VM275 ﾘﾌﾄｼﾘﾝﾀﾞｱｯｾﾝ	2	INC.1-11
-	218G8-40001		CYL-ASSY,LIFT VM300 ﾘﾌﾄｼﾘﾝﾀﾞｱｯｾﾝ	2	INC.1-11
-	218G8-40061		CYL-ASSY,LIFT VM325 ﾘﾌﾄｼﾘﾝﾀﾞｱｯｾﾝ	2	INC.1-11
-	218G8-40071		CYL-ASSY,LIFT VM330 ﾘﾌﾄｼﾘﾝﾀﾞｱｯｾﾝ	2	INC.1-11
-	218G8-40081		CYL-ASSY,LIFT VM350 ﾘﾌﾄｼﾘﾝﾀﾞｱｯｾﾝ	2	INC.1-11
-	218G8-40091		CYL-ASSY,LIFT VM366 ﾘﾌﾄｼﾘﾝﾀﾞｱｯｾﾝ	2	INC.1-11
-	218G8-40101		CYL-ASSY,LIFT VM370 ﾘﾌﾄｼﾘﾝﾀﾞｱｯｾﾝ	2	INC.1-11
-	218G8-40111		CYL-ASSY,LIFT VM375 ﾘﾌﾄｼﾘﾝﾀﾞｱｯｾﾝ	2	INC.1-11
-	218G8-40121		CYL-ASSY,LIFT VM400 ﾘﾌﾄｼﾘﾝﾀﾞｱｯｾﾝ	2	INC.1-11
-	218G8-40131		CYL-ASSY,LIFT VM425 ﾘﾌﾄｼﾘﾝﾀﾞｱｯｾﾝ	2	INC.1-11
-	218G8-40141		CYL-ASSY,LIFT VM450 ﾘﾌﾄｼﾘﾝﾀﾞｱｯｾﾝ	2	INC.1-11
-	218G8-40151		CYL-ASSY,LIFT VM475 ﾘﾌﾄｼﾘﾝﾀﾞｱｯｾﾝ	2	INC.1-11
-	218G8-40161		CYL-ASSY,LIFT VM500 ﾘﾌﾄｼﾘﾝﾀﾞｱｯｾﾝ	2	INC.1-11
-	218G8-40171		CYL-ASSY,LIFT VM550 ﾘﾌﾄｼﾘﾝﾀﾞｱｯｾﾝ	2	INC.1-11
-	218G8-40181		CYL-ASSY,LIFT VM600 ﾘﾌﾄｼﾘﾝﾀﾞｱｯｾﾝ	2	INC.1-11
1	B-30697-49101		BODY,CYL VM200 ﾎﾞﾃﾞｨ	2	
-	B-30697-49201		BODY,CYL VM225 ﾎﾞﾃﾞｨ	2	
-	B-30697-49301		BODY,CYL VM250 ﾎﾞﾃﾞｨ	2	
-	B-30697-49401		BODY,CYL VM270 ﾎﾞﾃﾞｨ	2	
-	B-30697-49501		BODY,CYL VM275 ﾎﾞﾃﾞｨ	2	
-	B-30697-49601		BODY,CYL VM300 ﾎﾞﾃﾞｨ	2	
-	B-30697-49701		BODY,CYL VM325 ﾎﾞﾃﾞｨ	2	
-	B-30697-49801		BODY,CYL VM330 ﾎﾞﾃﾞｨ	2	
-	B-30697-49901		BODY,CYL VM350 ﾎﾞﾃﾞｨ	2	
-	B-30697-50001		BODY,CYL VM366 ﾎﾞﾃﾞｨ	2	
-	B-30697-50101		BODY,CYL VM370 ﾎﾞﾃﾞｨ	2	
-	B-30697-50201		BODY,CYL VM375 ﾎﾞﾃﾞｨ	2	
-	B-30697-50301		BODY,CYL VM400 ﾎﾞﾃﾞｨ	2	
-	B-30697-50401		BODY,CYL VM425 ﾎﾞﾃﾞｨ	2	
-	B-30697-50501		BODY,CYL VM450 ﾎﾞﾃﾞｨ	2	
-	B-30697-50601		BODY,CYL VM475 ﾎﾞﾃﾞｨ	2	
-	B-30697-50701		BODY,CYL VM500 ﾎﾞﾃﾞｨ	2	
-	B-30697-50801		BODY,CYL VM550 ﾎﾞﾃﾞｨ	2	
-	B-30697-50901		BODY,CYL VM600 ﾎﾞﾃﾞｨ	2	
2	B-B6527-62102		ROD,PISTON VM200 ﾛｯﾄﾞ	2	
-	B-B6537-88202		ROD,PISTON VM225 ﾛｯﾄﾞ	2	
-	B-B6527-62302		ROD,PISTON VM250 ﾛｯﾄﾞ	2	
-	B-B6527-62402		ROD,PISTON VM270 ﾛｯﾄﾞ	2	
-	B-B6537-88502		ROD,PISTON VM275 ﾛｯﾄﾞ	2	
-	B-B6527-62502		ROD,PISTON VM300 ﾛｯﾄﾞ	2	
-	B-B6537-88702		ROD,PISTON VM325 ﾛｯﾄﾞ	2	
-	B-B6527-62602		ROD,PISTON VM330 ﾛｯﾄﾞ	2	
-	B-B6527-62702		ROD,PISTON VM350 ﾛｯﾄﾞ	2	
-	B-B6537-89002		ROD,PISTON VM366 ﾛｯﾄﾞ	2	
-	B-B6527-62802		ROD,PISTON VM370 ﾛｯﾄﾞ	2	
-	B-B6537-89202		ROD,PISTON VM375 ﾛｯﾄﾞ	2	

FIG.188 LIFT CYLINDER [VM18J]

(M5018430) リフトシリンダ

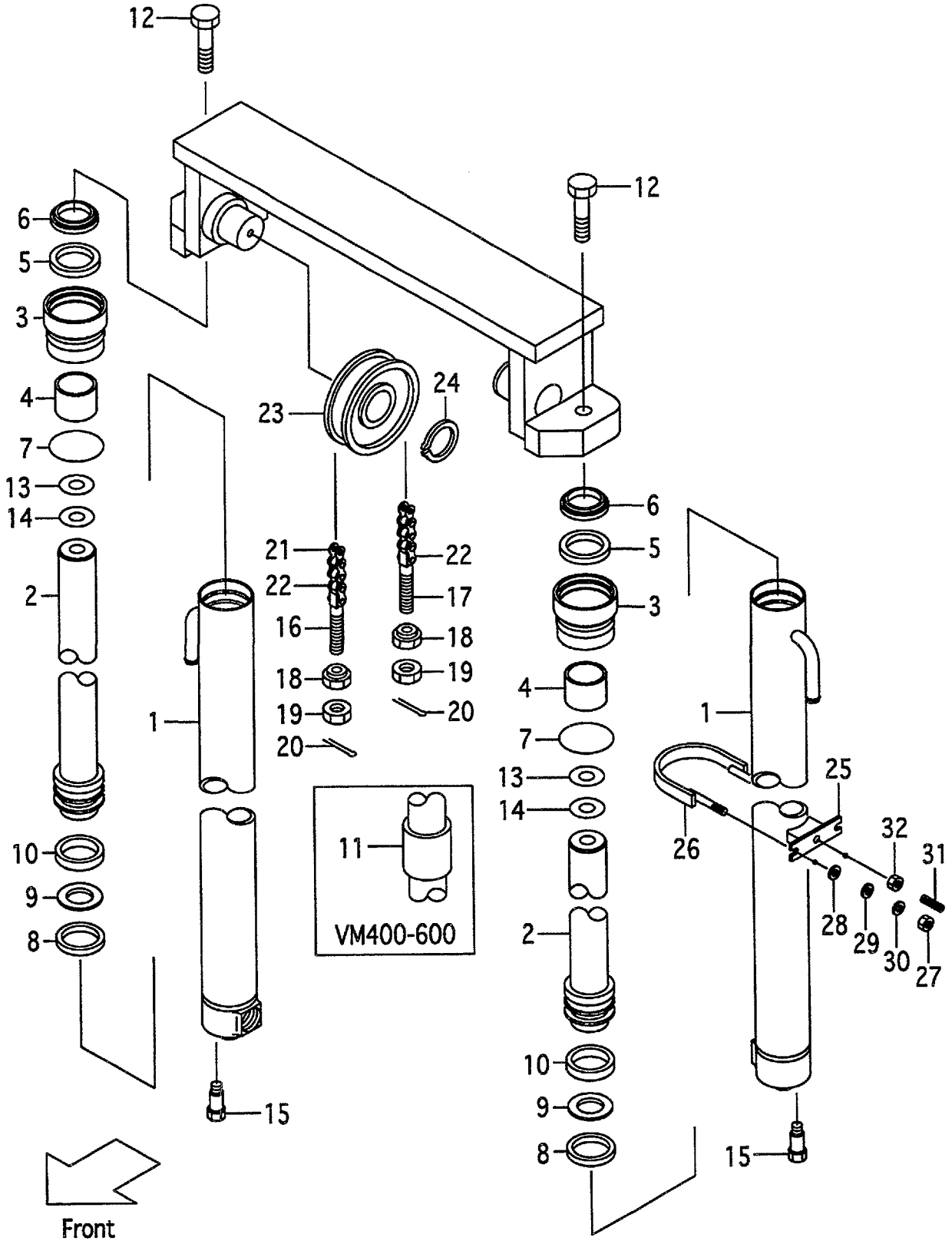

A:VM18J(1.8t)

Item No	Part No.	Mark	Description		Req'd	Remarks : Serial No.
-	B-B6527-64802		ROD,PISTON VM400	ﾛｯﾄﾞ	2	
-	B-B6537-89402		ROD,PISTON VM425	ﾛｯﾄﾞ	2	
-	B-B6527-65002		ROD,PISTON VM450	ﾛｯﾄﾞ	2	
-	B-B6537-89602		ROD,PISTON VM475	ﾛｯﾄﾞ	2	
-	B-B6527-65302		ROD,PISTON VM500	ﾛｯﾄﾞ	2	
-	B-B6527-63502		ROD,PISTON VM550	ﾛｯﾄﾞ	2	
-	B-B6537-89902		ROD,PISTON VM600	ﾛｯﾄﾞ	2	
3	B-30121-45018	*	CAP	ｷｬｯﾌﾟ	2	
4	B-30131-35017	*	BUSHING	ﾌﾞｯｼﾝｸﾞ	2	
5	B-30961-03512	*	U-RING	Uﾘﾝｸﾞ	2	
6	B-30191-35025	*	RING,WIPER	ﾘﾝｸﾞ	2	
7	B-30161-91773	*	O-RING	Oﾘﾝｸﾞ	2	
8	B-30161-45046	*	U-RING	Uﾘﾝｸﾞ	2	
9	B-30461-45039	*	RING	ﾘﾝｸﾞ	2	
10	B-30131-45018		BUSHING	ﾌﾞｯｼﾝｸﾞ	2	
11	B-30111-35012		SPACER VM400	ｽﾍﾟｰｻ	2	
-	B-30111-35012		SPACER VM425	ｽﾍﾟｰｻ	2	
-	B-30111-35012		SPACER VM450	ｽﾍﾟｰｻ	2	
-	B-30111-35012		SPACER VM475	ｽﾍﾟｰｻ	2	
-	B-30111-35012		SPACER VM500	ｽﾍﾟｰｻ	2	
-	B-30111-35008		SPACER VM550	ｽﾍﾟｰｻ	2	
-	B-30111-35008		SPACER VM600	ｽﾍﾟｰｻ	2	
12	01103-12035		BOLT	ﾎﾞﾙﾄ	2	
13	22717-40081		SHIM	ｼﾑ	4	
14	22517-40051		SHIM	ｼﾑ	4	
15	216G8-43151		BOLT	ﾎﾞﾙﾄ	2	
16	218G8-42501		PIN,ANCHOR	ﾋﾟﾝ	2	
-	510F5-54051		PIN,ANCHOR	ﾋﾟﾝ	2	[FC][FCS35][FCS45][FCS55]
17	218G8-42511		PIN,ANCHOR	ﾋﾟﾝ	2	
-	510F5-54061		PIN,ANCHOR	ﾋﾟﾝ	2	[FC][FCS35][FCS45][FCS55]
18	22118-40181		NUT	ﾅｯﾄ	4	
-	22118-40181		NUT	ﾅｯﾄ	4	[FC][FCS35][FCS45][FCS55]
19	01400-00014		NUT	ﾅｯﾄ	4	
-	01400-00014		NUT	ﾅｯﾄ	4	[FC][FCS35][FCS45][FCS55]
20	02200-03030		PIN	ﾋﾟﾝ	4	
-	02200-03030		PIN	ﾋﾟﾝ	4	[FC][FCS35][FCS45][FCS55]
21	218G8-45791		CHAIN VM200	ﾁｪｰﾝ	2	
-	218G8-45871		CHAIN VM225	ﾁｪｰﾝ	2	
-	218G8-45951		CHAIN VM250	ﾁｪｰﾝ	2	
-	218G8-46011		CHAIN VM270	ﾁｪｰﾝ	2	
-	218G8-46031		CHAIN VM275	ﾁｪｰﾝ	2	
-	218G8-46111		CHAIN VM300	ﾁｪｰﾝ	2	
-	218G8-46191		CHAIN VM325	ﾁｪｰﾝ	2	
-	218G8-46211		CHAIN VM330	ﾁｪｰﾝ	2	
-	218G8-46271		CHAIN VM350	ﾁｪｰﾝ	2	
-	218G8-46311		CHAIN VM366	ﾁｪｰﾝ	2	
-	218G8-46331		CHAIN VM370	ﾁｪｰﾝ	2	
-	218G8-46351		CHAIN VM375	ﾁｪｰﾝ	2	
-	218G8-46451		CHAIN VM400	ﾁｪｰﾝ	2	
-	218G8-46531		CHAIN VM425	ﾁｪｰﾝ	2	

FIG.188 LIFT CYLINDER [VM18J]

(M5018430) リフトシリンダ

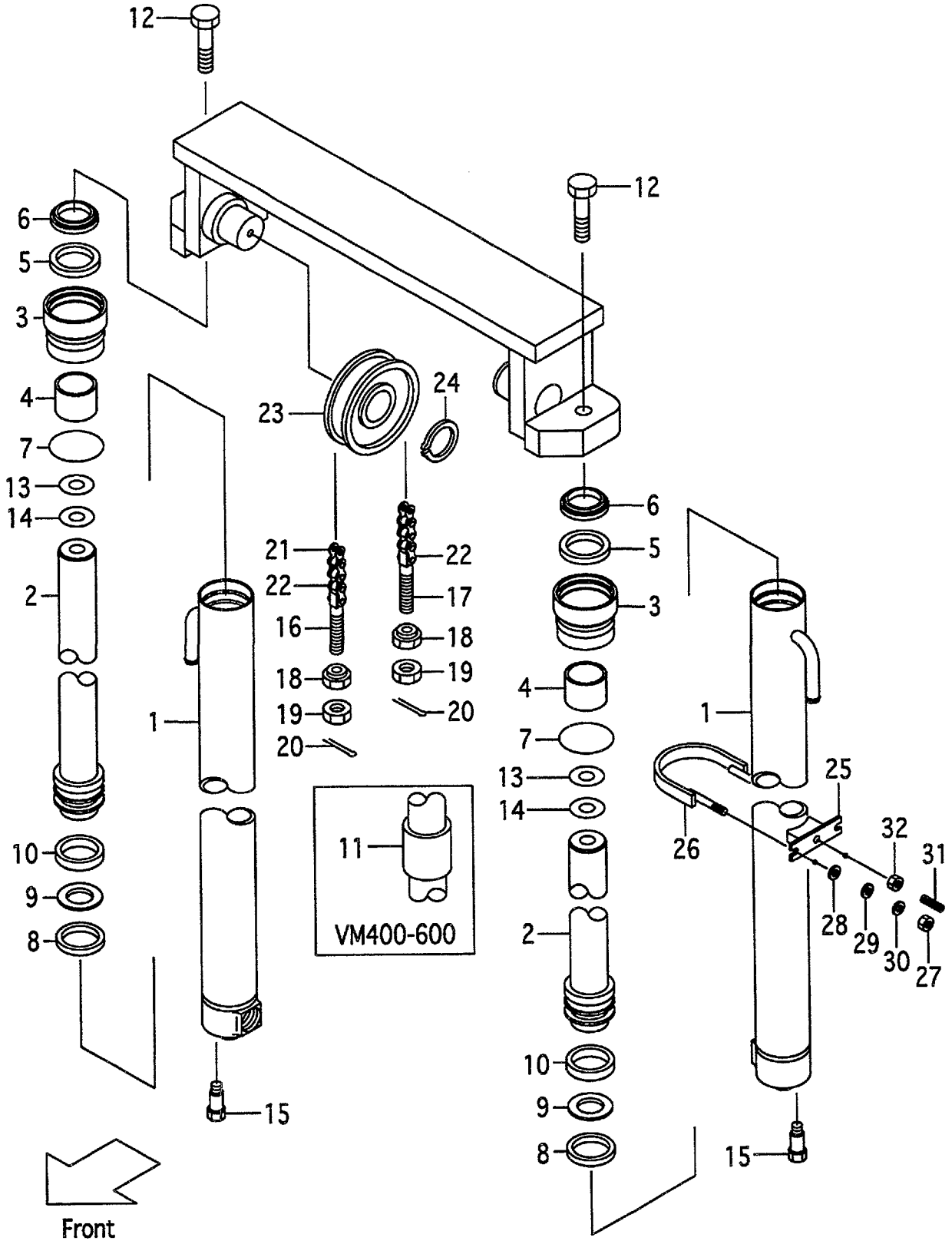

A:VM18J(1.8t)

Item No	Part No.	Mark	Description		Req'd	Remarks : Serial No.
-	218G8-46611		CHAIN VM450	ﾁｪｰﾝ	2	
-	218G8-46691		CHAIN VM475	ﾁｪｰﾝ	2	
-	218G8-46771		CHAIN VM500	ﾁｪｰﾝ	2	
-	218G8-46971		CHAIN VM550	ﾁｪｰﾝ	2	
-	218G8-47111		CHAIN VM600	ﾁｪｰﾝ	2	
-	09001-08051		CHAIN VM200	ﾁｪｰﾝ	2	[FC][FCS35][FCS45][FCS55]
-	09001-08055		CHAIN VM225	ﾁｪｰﾝ	2	[FC][FCS35][FCS45][FCS55]
-	09001-08061		CHAIN VM250	ﾁｪｰﾝ	2	[FC][FCS35][FCS45][FCS55]
-	09001-08065		CHAIN VM270	ﾁｪｰﾝ	2	[FC][FCS35][FCS45][FCS55]
-	09001-08065		CHAIN VM275	ﾁｪｰﾝ	2	[FC][FCS35][FCS45][FCS55]
-	09001-08071		CHAIN VM300	ﾁｪｰﾝ	2	[FC][FCS35][FCS45][FCS55]
-	09001-08075		CHAIN VM325	ﾁｪｰﾝ	2	[FC][FCS35][FCS45][FCS55]
-	09001-08077		CHAIN VM330	ﾁｪｰﾝ	2	[FC][FCS35][FCS45][FCS55]
-	09001-08081		CHAIN VM350	ﾁｪｰﾝ	2	[FC][FCS35][FCS45][FCS55]
-	09001-08083		CHAIN VM366	ﾁｪｰﾝ	2	[FC][FCS35][FCS45][FCS55]
-	09001-08085		CHAIN VM370	ﾁｪｰﾝ	2	[FC][FCS35][FCS45][FCS55]
-	09001-08085		CHAIN VM375	ﾁｪｰﾝ	2	[FC][FCS35][FCS45][FCS55]
-	09001-08093		CHAIN VM400	ﾁｪｰﾝ	2	[FC][FCS35][FCS45][FCS55]
-	09001-08097		CHAIN VM425	ﾁｪｰﾝ	2	[FC][FCS35][FCS45][FCS55]
-	09001-08103		CHAIN VM450	ﾁｪｰﾝ	2	[FC][FCS35][FCS45][FCS55]
-	09001-08107		CHAIN VM475	ﾁｪｰﾝ	2	[FC][FCS35][FCS45][FCS55]
-	09001-08113		CHAIN VM500	ﾁｪｰﾝ	2	[FC][FCS35][FCS45][FCS55]
-	09001-08123		CHAIN VM550	ﾁｪｰﾝ	2	[FC][FCS35][FCS45][FCS55]
-	09001-08133		CHAIN VM600	ﾁｪｰﾝ	2	[FC][FCS35][FCS45][FCS55]
22	218G8-42701		LINK	ﾘﾝｸ	2	
23	216G8-42031		SHEAVE	ｼｰﾌﾞ	2	
-	516G3-74001		SHEAVE	ｼｰﾌﾞ	2	[FC][FCS35][FCS45][FCS55]
24	02100-00035		RING,SNAP	ｽﾅｯﾌﾟﾘﾝｸﾞ	2	
-	02100-00035		RING,SNAP	ｽﾅｯﾌﾟﾘﾝｸﾞ	2	[FC][FCS35][FCS45][FCS55]
25	280B8-42031		SUPPORT	ｻﾎﾟｰﾄ	2	
26	280B8-42001		U-BOLT	Uﾎﾞﾙﾄ	2	
27	278R0-63151		NUT	ﾅｯﾄ	4	
28	02000-00010		WASHER	ﾜｯｼｬ	4	
29	02000-00008		WASHER	ﾜｯｼｬ	4	
30	02010-00008		WASHER	ﾜｯｼｬ	4	
31	215E8-42241		PLUG	ﾌﾟﾗｸﾞ	2	
32	234A8-42571		NUT	ﾅｯﾄ	2	
K1	B-3045A-00020		KIT,REPAIR	ﾘﾍﾟｱｷｯﾄ	2	INC.5-9
K2	B-3045B-00026		KIT,HEAD	ﾍｯﾄﾞｷｯﾄ	2	INC.3,4

FIG.189 MAST PIPING [VM18J]

(M5018440) マストパイピング

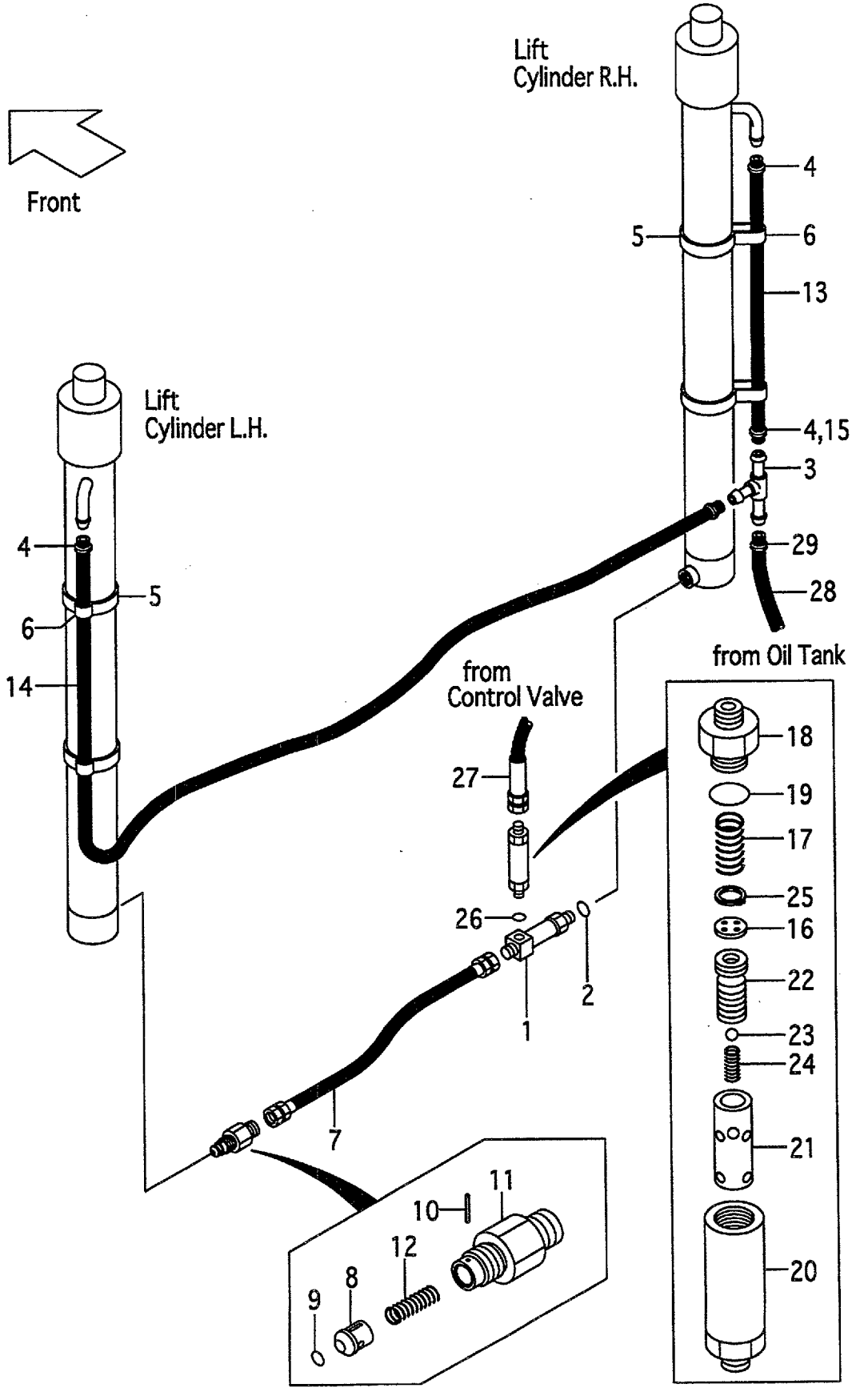

A:VM18J(1.8t)

Item No	Part No.	Mark	Description		Req'd	Remarks : Serial No.
1	234A8-43051		THREE-WAY	ｽﾘｰｳｪｲ	1	
2	03320-00140		O-RING	Oﾘﾝｸﾞ	1	
3	23679-45051		THREE-WAY	ｽﾘｰｳｪｲ	1	
-	53675-55051		THREE-WAY	ｽﾘｰｳｪｲ	1	[FC][RTL]
4	04911-00018		CLIP	ｸﾘｯﾌﾟ	4	
-	24329-46201		CLIP	ｸﾘｯﾌﾟ	2	[FC][RTL]
5	04913-21380		BAND	ﾊﾞﾝﾄﾞ	4	
6	23678-42401		BAND,HOSE	ﾊﾞﾝﾄﾞ	4	
-	53675-54101		BAND	ﾊﾞﾝﾄﾞ	4	[FC][RTL]
7	216G8-43501		HOSE	ﾎｰｽ	1	
A1	216G0-93201		VALVE-ASSY,CUT	ｶｯﾄﾊﾞﾙﾌﾞｱｯｾﾝ	1	INC.8-12
8	216G0-93211		PISTON	ﾋﾟｽﾄﾝ	1	
9	03320-00140		O-RING	Oﾘﾝｸﾞ	1	
10	02270-01014		PIN	ﾋﾟﾝ	1	
11	234A8-42621		NIPPLE	ﾆｯﾌﾟﾙ	1	
12	234A8-42611		SPRING	ｽﾌﾟﾘﾝｸﾞ	1	
13	23678-40075		HOSE VM200	ﾎｰｽ	1	
-	23678-40085		HOSE VM225	ﾎｰｽ	1	
-	23678-40100		HOSE VM250	ﾎｰｽ	1	
-	23678-40110		HOSE	ﾎｰｽ	1	[VM270][VM275]
-	23678-40125		HOSE VM300	ﾎｰｽ	1	
-	23678-40135		HOSE VM325	ﾎｰｽ	1	
-	23678-40140		HOSE VM330	ﾎｰｽ	1	
-	23678-40150		HOSE VM350	ﾎｰｽ	1	
-	23678-40160		HOSE	ﾎｰｽ	1	[VM366-375]
-	23678-40180		HOSE VM400	ﾎｰｽ	1	
-	23678-40190		HOSE VM425	ﾎｰｽ	1	
-	23678-40205		HOSE VM450	ﾎｰｽ	1	
-	23678-40215		HOSE VM475	ﾎｰｽ	1	
-	23678-40230		HOSE VM500	ﾎｰｽ	1	
-	23678-40260		HOSE VM550	ﾎｰｽ	1	
-	23678-40285		HOSE VM600	ﾎｰｽ	1	
-	04710-04075		HOSE VM200	ﾎｰｽ	1	[FC][RTL]
-	04710-04085		HOSE VM225	ﾎｰｽ	1	[FC][RTL]
-	04710-04100		HOSE VM250	ﾎｰｽ	1	[FC][RTL]
-	04710-04110		HOSE VM270	ﾎｰｽ	1	[FC][RTL]
-	04710-04110		HOSE VM275	ﾎｰｽ	1	[FC][RTL]
-	04710-04125		HOSE VM300	ﾎｰｽ	1	[FC][RTL]
-	04710-04135		HOSE VM325	ﾎｰｽ	1	[FC][RTL]
-	04710-04140		HOSE VM330	ﾎｰｽ	1	[FC][RTL]
-	04710-04150		HOSE VM350	ﾎｰｽ	1	[FC][RTL]
-	04710-04160		HOSE VM366	ﾎｰｽ	1	[FC][RTL]
-	04710-04160		HOSE VM370	ﾎｰｽ	1	[FC][RTL]
-	04710-04160		HOSE VM375	ﾎｰｽ	1	[FC][RTL]
-	04710-04180		HOSE VM400	ﾎｰｽ	1	[FC][RTL]
-	04710-04190		HOSE VM425	ﾎｰｽ	1	[FC][RTL]
-	04710-04205		HOSE VM450	ﾎｰｽ	1	[FC][RTL]
-	04710-04215		HOSE VM475	ﾎｰｽ	1	[FC][RTL]
-	04710-04230		HOSE VM500	ﾎｰｽ	1	[FC][RTL]
-	04710-04260		HOSE VM550	ﾎｰｽ	1	[FC][RTL]

FIG.189 MAST PIPING [VM18J]

(M5018440) マストパイピング

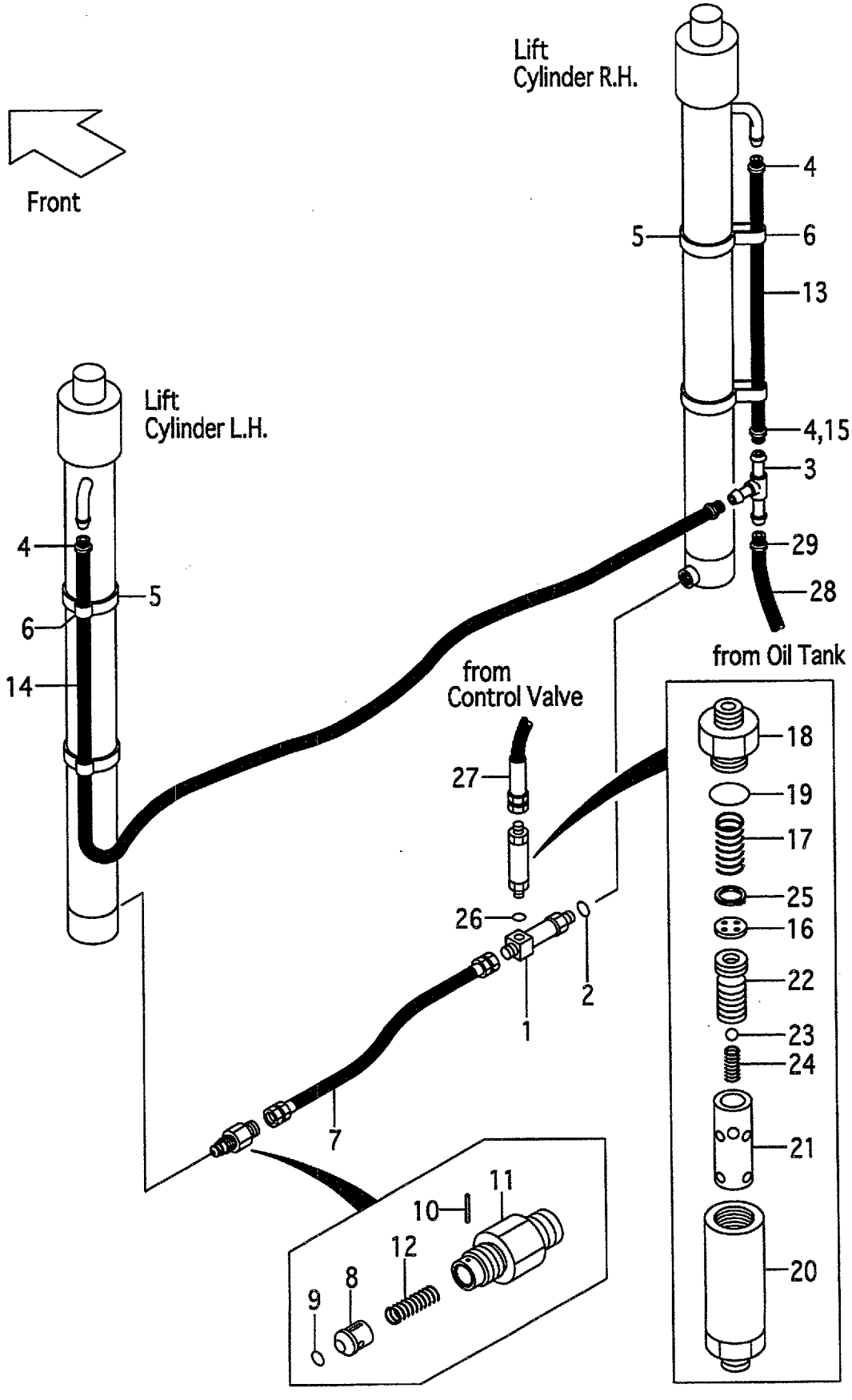

A:VM18J(1.8t)

Item No	Part No.	Mark	Description		Req'd	Remarks : Serial No.
-	04710-04285		HOSE VM600	ホース	1	[FC][RTL]
14	23678-40130		HOSE VM200	ホース	1	
-	23678-40140		HOSE VM225	ホース	1	
-	23678-40155		HOSE VM250	ホース	1	
-	23678-40165		HOSE	ホース	1	[VM270][VM275]
-	23678-40175		HOSE VM300	ホース	1	
-	23678-40190		HOSE VM325	ホース	1	
-	23678-40195		HOSE VM330	ホース	1	
-	23678-40205		HOSE VM350	ホース	1	
-	23678-40215		HOSE	ホース	1	[VM366-375]
-	23678-40235		HOSE VM400	ホース	1	
-	23678-40245		HOSE VM425	ホース	1	
-	23678-40260		HOSE VM450	ホース	1	
-	23678-40270		HOSE VM475	ホース	1	
-	23678-40285		HOSE VM500	ホース	1	
-	23678-40315		HOSE VM550	ホース	1	
-	23678-40340		HOSE VM600	ホース	1	
-	04710-04130		HOSE VM200	ホース	1	[FC][RTL]
-	04710-04140		HOSE VM225	ホース	1	[FC][RTL]
-	04710-04155		HOSE VM250	ホース	1	[FC][RTL]
-	04710-04165		HOSE VM270	ホース	1	[FC][RTL]
-	04710-04165		HOSE VM275	ホース	1	[FC][RTL]
-	04710-04175		HOSE VM300	ホース	1	[FC][RTL]
-	04710-04190		HOSE VM325	ホース	1	[FC][RTL]
-	04710-04195		HOSE VM330	ホース	1	[FC][RTL]
-	04710-04205		HOSE VM350	ホース	1	[FC][RTL]
-	04710-04215		HOSE VM366	ホース	1	[FC][RTL]
-	04710-04215		HOSE VM370	ホース	1	[FC][RTL]
-	04710-04215		HOSE VM375	ホース	1	[FC][RTL]
-	04710-04235		HOSE VM400	ホース	1	[FC][RTL]
-	04710-04245		HOSE VM425	ホース	1	[FC][RTL]
-	04710-04260		HOSE VM450	ホース	1	[FC][RTL]
-	04710-04270		HOSE VM475	ホース	1	[FC][RTL]
-	04710-04285		HOSE VM500	ホース	1	[FC][RTL]
-	04710-04315		HOSE VM550	ホース	1	[FC][RTL]
-	04710-04340		HOSE VM600	ホース	1	[FC][RTL]
15	04911-00021		CLIP	ｸﾘｯﾌﾟ	2	[FC][RTL]
A2	216G8-41001		REGULATOR-ASSY	ﾚｷﾞｭﾚｰﾀｱｯｾﾝ	1	INC.16-25
16	210F8-43031		PLATE	ﾌﾟﾚｰﾄ	1	
17	27979-43101		SPRING	ｽﾌﾟﾘﾝｸﾞ	1	
18	216G8-42121		NIPPLE	ﾆｯﾌﾟﾙ	1	
19	03300-00280		O-RING	Oﾘﾝｸﾞ	1	
20	214A8-43011		CASE	ｹｰｽ	1	
21	216G8-42111		SLEEVE	ｽﾘｰﾌﾞ	1	
22	24459-42921		PISTON	ﾋﾟｽﾄﾝ	1	
23	24459-42951		BALL,NYLON	ﾎﾞｰﾙ	1	
24	214A8-44151		SPRING	ｽﾌﾟﾘﾝｸﾞ	1	
25	02110-00018		RING,SNAP	ｽﾅｯﾌﾟﾘﾝｸﾞ	1	
26	03320-00180		O-RING	Oﾘﾝｸﾞ	1	
27	216G8-02502		HOSE	ﾎｰｽ	1	

FIG.189 MAST PIPING [VM18J]

(M5018440) マストパイピング

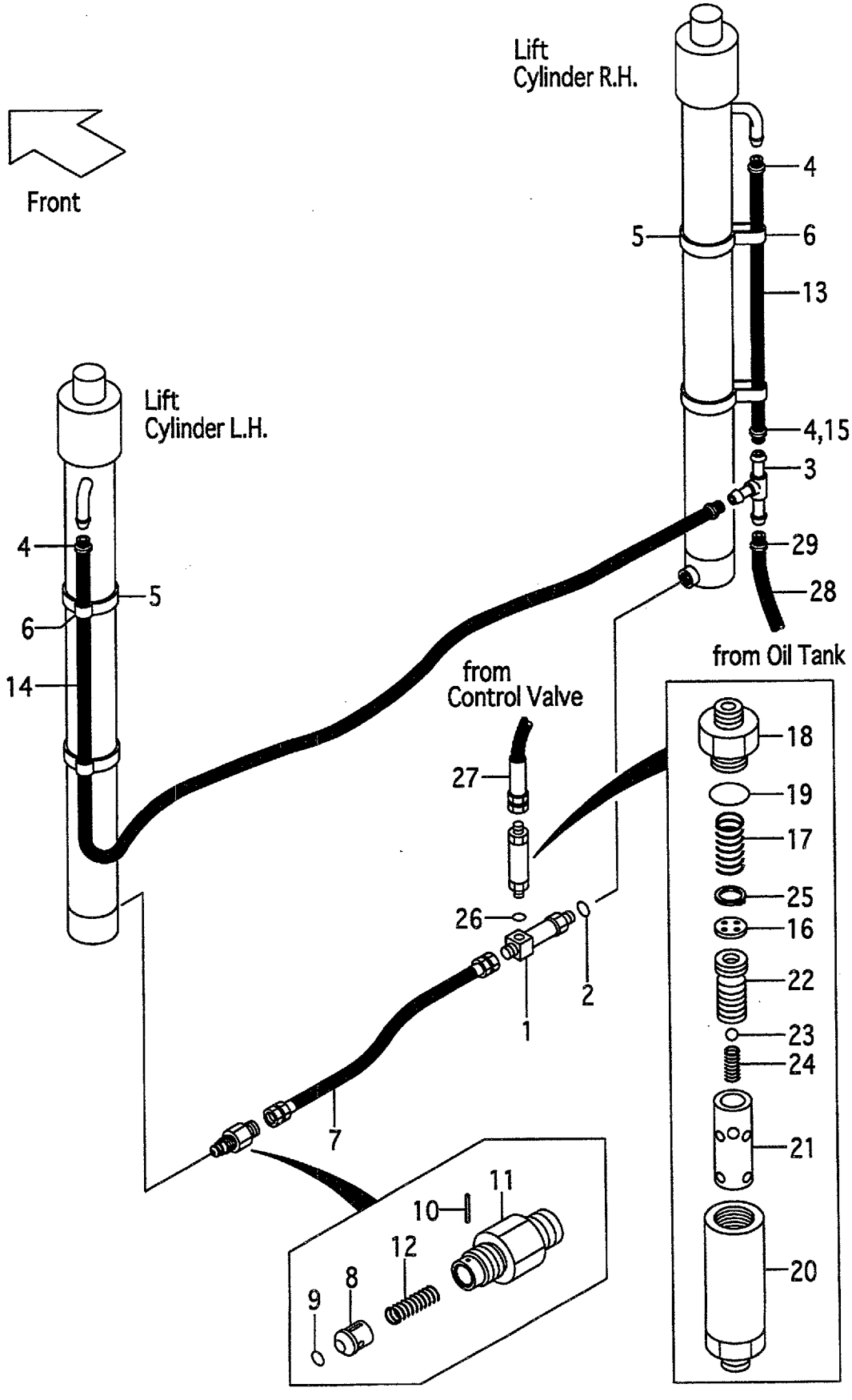

A:VM18J(1.8t)

Item No	Part No.	Mark	Description		Req'd	Remarks : Serial No.
-	216G8-02502		HOSE	ホース	1	[FC][RTL]
28	23678-40095		HOSE	ホース	1	
-	04710-04110		HOSE	ホース	1	[FC][RTL]
29	04911-00018		CLIP	クリップ	1	
-	04914-00016		CLIP,TANK SIDE	クリップ	1	
-	04911-00021		CLIP	クリップ	2	[FC][RTL]

FIG.190 MAST[VFM18G]

(M5010410) マスト

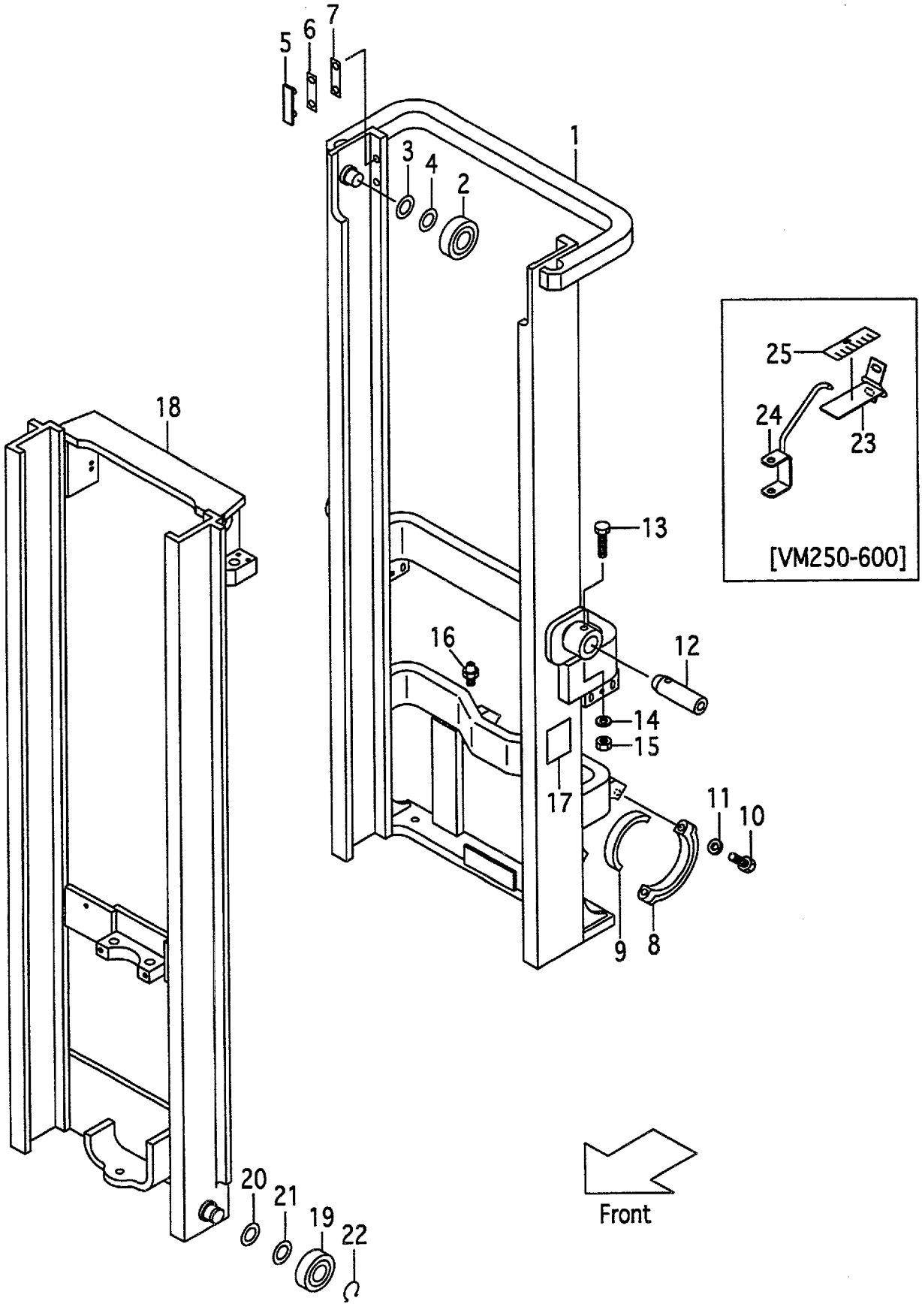

A:VFM18G(1.0t)
B:VFM18G(1.5t)
C:VFM18G(1.8t)

FIG.190
(M5010410)

Item No	Part No.	Mark	Description		Req'd	Remarks : Serial No.
1	218G0-40211		MAST,OUTER VFM200	ｱｳﾀﾏｽﾄ	1	
-	218G0-40221		MAST,OUTER VFM225	ｱｳﾀﾏｽﾄ	1	
-	218G0-40231		MAST,OUTER VFM250	ｱｳﾀﾏｽﾄ	1	
-	218G0-40241		MAST,OUTER VFM270	ｱｳﾀﾏｽﾄ	1	
-	218G0-40251		MAST,OUTER VFM275	ｱｳﾀﾏｽﾄ	1	
-	218G0-40201		MAST,OUTER VFM300	ｱｳﾀﾏｽﾄ	1	
-	218G0-40261		MAST,OUTER VFM325	ｱｳﾀﾏｽﾄ	1	
-	218G0-40271		MAST,OUTER VFM330	ｱｳﾀﾏｽﾄ	1	
-	218G0-40281		MAST,OUTER VFM350	ｱｳﾀﾏｽﾄ	1	
-	218G0-40291		MAST,OUTER VFM366	ｱｳﾀﾏｽﾄ	1	
-	218G0-40301		MAST,OUTER VFM370	ｱｳﾀﾏｽﾄ	1	
-	218G0-40311		MAST,OUTER VFM375	ｱｳﾀﾏｽﾄ	1	
-	218G0-40321		MAST,OUTER VFM400	ｱｳﾀﾏｽﾄ	1	
-	218G0-40331		MAST,OUTER VFM425	ｱｳﾀﾏｽﾄ	1	
-	218G0-40341		MAST,OUTER VFM450	ｱｳﾀﾏｽﾄ	1	
-	218G0-40351		MAST,OUTER VFM475	ｱｳﾀﾏｽﾄ	1	
-	218G0-40361		MAST,OUTER VFM500	ｱｳﾀﾏｽﾄ	1	
-	218G0-40371		MAST,OUTER VFM550	ｱｳﾀﾏｽﾄ	1	
-	218G0-40381		MAST,OUTER VFM600	ｱｳﾀﾏｽﾄ	1	
-	518G3-91211		MAST,OUTER VFM200	ｱｳﾀﾏｽﾄ	1	[EXR][RW][HC]
-	518G3-91221		MAST,OUTER VFM225	ｱｳﾀﾏｽﾄ	1	[EXR][RW][HC]
-	518G3-91231		MAST,OUTER VFM250	ｱｳﾀﾏｽﾄ	1	[EXR][RW][HC]
-	518G3-91241		MAST,OUTER VFM270	ｱｳﾀﾏｽﾄ	1	[EXR][RW][HC]
-	518G3-91251		MAST,OUTER VFM275	ｱｳﾀﾏｽﾄ	1	[EXR][RW][HC]
-	518G3-91201		MAST,OUTER VFM300	ｱｳﾀﾏｽﾄ	1	[EXR][RW][HC]
-	518G3-91261		MAST,OUTER VFM325	ｱｳﾀﾏｽﾄ	1	[EXR][RW][HC]
-	518G3-91271		MAST,OUTER VFM330	ｱｳﾀﾏｽﾄ	1	[EXR][RW][HC]
-	518G3-91281		MAST,OUTER VFM350	ｱｳﾀﾏｽﾄ	1	[EXR][RW][HC]
-	518G3-91291		MAST,OUTER VFM366	ｱｳﾀﾏｽﾄ	1	[EXR][RW][HC]
-	518G3-91301		MAST,OUTER VFM370	ｱｳﾀﾏｽﾄ	1	[EXR][RW][HC]
-	518G3-91311		MAST,OUTER VFM375	ｱｳﾀﾏｽﾄ	1	[EXR][RW][HC]
-	518G3-91321		MAST,OUTER VFM400	ｱｳﾀﾏｽﾄ	1	[EXR][RW][HC]
-	518G3-91331		MAST,OUTER VFM425	ｱｳﾀﾏｽﾄ	1	[EXR][RW][HC]
-	518G3-91341		MAST,OUTER VFM450	ｱｳﾀﾏｽﾄ	1	[EXR][RW][HC]
-	518G3-91351		MAST,OUTER VFM475	ｱｳﾀﾏｽﾄ	1	[EXR][RW][HC]
-	518G3-91361		MAST,OUTER VFM500	ｱｳﾀﾏｽﾄ	1	[EXR][RW][HC]
-	518G3-91371		MAST,OUTER VFM550	ｱｳﾀﾏｽﾄ	1	[EXR][RW][HC]
-	518G3-91381		MAST,OUTER VFM600	ｱｳﾀﾏｽﾄ	1	[EXR][RW][HC]
2	211F8-22221		ROLLER,END,102.0	ﾛｰﾗ	2	
-	211F8-22231		ROLLER,END,102.5	ﾛｰﾗ	(2)	
-	511F3-74021		ROLLER,END,102.0	ﾛｰﾗ	2	[FC][CS35][FCS35][FCS55] [FCS45]
-	511F3-74031		ROLLER,END,102.5	ﾛｰﾗ	(2)	[FC][CS35][FCS35][FCS55] [FCS45]
3	211F8-22261		SHIM,T-0.5	ｼﾑ	4	
4	211F8-22271		SHIM,T-1.0	ｼﾑ	8	
5	216G8-33401		SLIPPER	ｽﾘｯﾊﾟ	2	
6	216G8-33361		SHIM,T-0.5	ｼﾑ	8	
7	216G8-33371		SHIM,T-1.0	ｼﾑ	4	
8	210F6-12441		CAP	ｷｬｯﾌﾟ	2	

FIG.190 MAST[VFM18G]

(M5010410) マスト

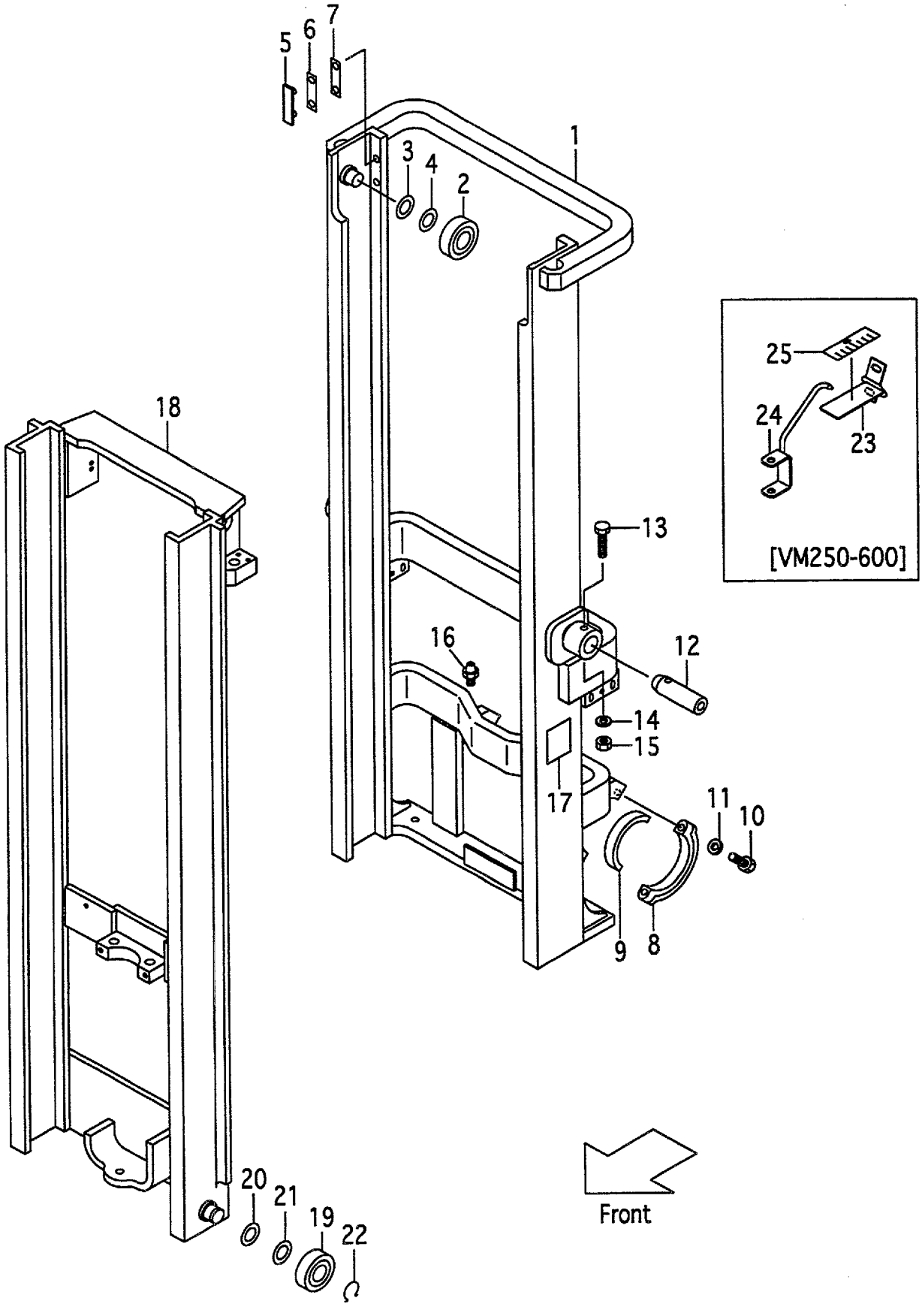

A:VFM18G(1.0t)
B:VFM18G(1.5t)
C:VFM18G(1.8t)

FIG.190
(M5010410)

Item No	Part No.	Mark	Description		Req'd	Remarks : Serial No.
9	216G8-02001		BUSHING	ﾌﾞｯｼﾝｸﾞ	2	
10	01100-14065		BOLT	ﾎﾞﾙﾄ	4	
11	02010-00014		WASHER	ﾜｯｼｬ	4	
12	210F8-02102		PIN	ﾋﾟﾝ	2	
13	216G8-52321		BOLT	ﾎﾞﾙﾄ	2	
14	02010-20012		WASHER	ﾜｯｼｬ	2	
15	234A8-42571		NUT	ﾅｯﾄ	2	
16	04901-00100		FITTING	ﾌｨｯﾃｨﾝｸﾞ	2	
17	23678-06002		PLATE,NAME	ﾌﾟﾚｰﾄ	1	
18	218G0-40411		MAST,INNER VFM200	ｲﾝﾅﾏｽﾄ	1	
-	218G0-40421		MAST,INNER VFM225	ｲﾝﾅﾏｽﾄ	1	
-	218G0-40431		MAST,INNER VFM250	ｲﾝﾅﾏｽﾄ	1	
-	218G0-40441		MAST,INNER VFM270	ｲﾝﾅﾏｽﾄ	1	
-	218G0-40451		MAST,INNER VFM275	ｲﾝﾅﾏｽﾄ	1	
-	218G0-40401		MAST,INNER VFM300	ｲﾝﾅﾏｽﾄ	1	
-	218G0-40461		MAST,INNER VFM325	ｲﾝﾅﾏｽﾄ	1	
-	218G0-40471		MAST,INNER VFM330	ｲﾝﾅﾏｽﾄ	1	
-	218G0-40481		MAST,INNER VFM350	ｲﾝﾅﾏｽﾄ	1	
-	218G0-40491		MAST,INNER VFM366	ｲﾝﾅﾏｽﾄ	1	
-	218G0-40501		MAST,INNER VFM370	ｲﾝﾅﾏｽﾄ	1	
-	218G0-40511		MAST,INNER VFM375	ｲﾝﾅﾏｽﾄ	1	
-	218G0-40521		MAST,INNER VFM400	ｲﾝﾅﾏｽﾄ	1	
-	218G0-40531		MAST,INNER VFM425	ｲﾝﾅﾏｽﾄ	1	
-	218G0-40541		MAST,INNER VFM450	ｲﾝﾅﾏｽﾄ	1	
-	218G0-40551		MAST,INNER VFM475	ｲﾝﾅﾏｽﾄ	1	
-	218G0-40561		MAST,INNER VFM500	ｲﾝﾅﾏｽﾄ	1	
-	218G0-40571		MAST,INNER VFM550	ｲﾝﾅﾏｽﾄ	1	
-	218G0-40581		MAST,INNER VFM600	ｲﾝﾅﾏｽﾄ	1	
19	211F8-22221		ROLLER,END,102.0	ﾛｰﾗ	2	
-	211F8-22231		ROLLER,END,102.5	ﾛｰﾗ	(2)	
-	511F3-74021		ROLLER,END,102.0	ﾛｰﾗ	2	[FC][CS35][FCS35][FCS55] [FCS45]
-	511F3-74031		ROLLER,END,102.5	ﾛｰﾗ	(2)	[FC][CS35][FCS35][FCS55] [FCS45]
20	211F8-22261		SHIM,T-0.5	ｼﾑ	4	
21	211F8-22271		SHIM,T-1.0	ｼﾑ	8	
22	09192-30035		RING,SNAP	ｽﾅｯﾌﾟﾘﾝｸﾞ	2	
23	636A0-10011		GAUGE	ｹﾞｰｼﾞ	1	[VFM250-600][TG][PPC][PR]
24	61170-10051		INDICATOR	ｲﾝｼﾞｹｰﾀ	1	[VFM250-600][TG][PPC][PR]
25	618G0-10051		SEAL	ｼｰﾙ	1	[VFM250-600][TG][PPC][PR]

FIG.191 LIFT CYLINDER(FRONT)[VFM18G]

(M5010510) リフトシリンダ(フロント)

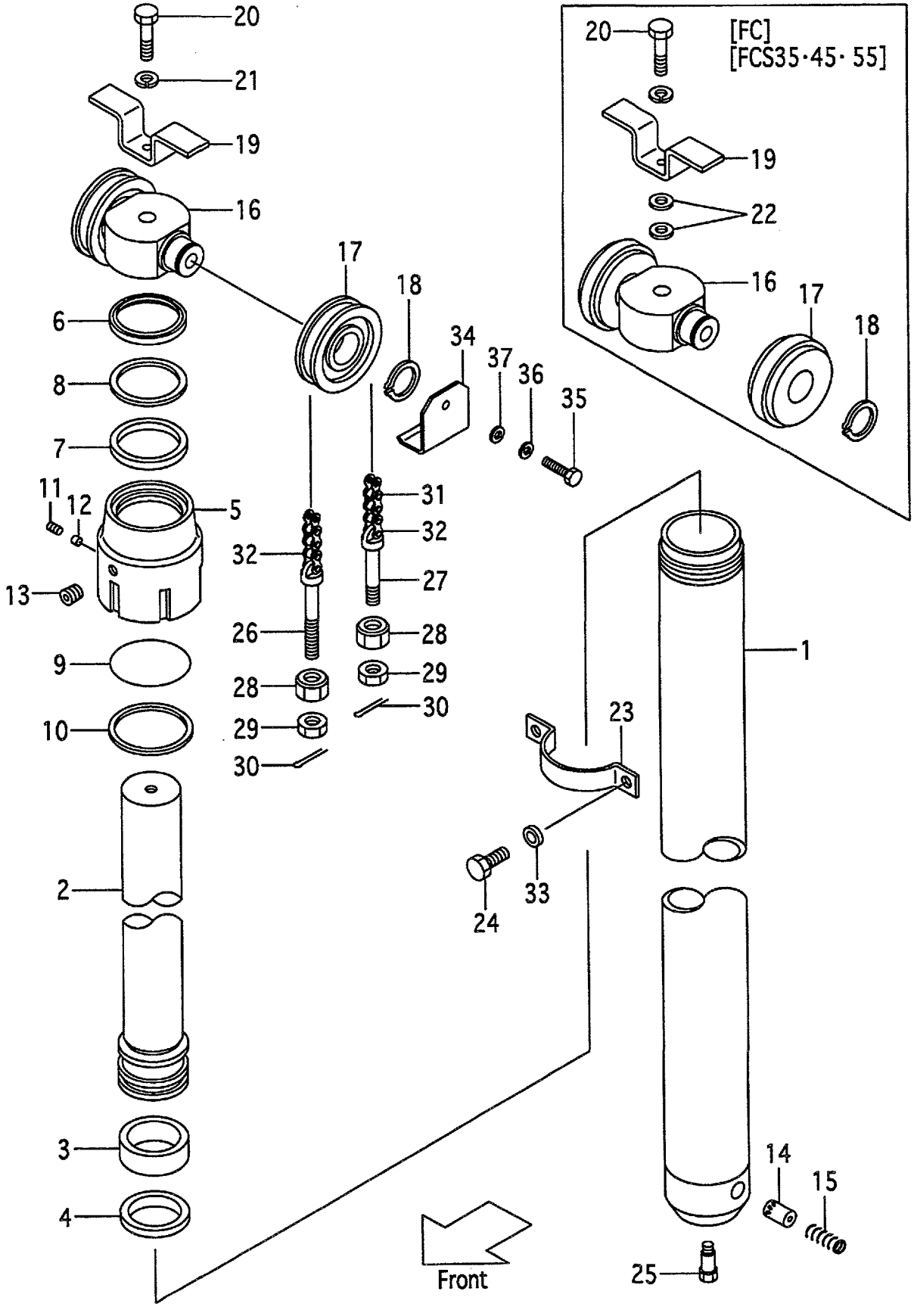

A:VFM18G(1.0t)
B:VFM18G(1.5t)
C:VFM18G(1.8t)

FIG.191
(M5010510)

Item No	Part No.	Mark	Description	Req'd	Remarks : Serial No.
A1	211F0-50111		CYL-ASSY,LIFT VFM200 ﾘﾌﾄｼﾘﾝﾀﾞｱｯｾﾝ	1	INC.1-15
-	211F0-50121		CYL-ASSY,LIFT VFM225 ﾘﾌﾄｼﾘﾝﾀﾞｱｯｾﾝ	1	INC.1-15
-	211F0-50131		CYL-ASSY,LIFT VFM250 ﾘﾌﾄｼﾘﾝﾀﾞｱｯｾﾝ	1	INC.1-15
-	211F0-50141		CYL-ASSY,LIFT VFM270 ﾘﾌﾄｼﾘﾝﾀﾞｱｯｾﾝ	1	INC.1-15
-	211F0-50151		CYL-ASSY,LIFT VFM275 ﾘﾌﾄｼﾘﾝﾀﾞｱｯｾﾝ	1	INC.1-15
-	211F0-50101		CYL-ASSY,LIFT VFM300 ﾘﾌﾄｼﾘﾝﾀﾞｱｯｾﾝ	1	INC.1-15
-	211F0-50161		CYL-ASSY,LIFT VFM325 ﾘﾌﾄｼﾘﾝﾀﾞｱｯｾﾝ	1	INC.1-15
-	211F0-50171		CYL-ASSY,LIFT VFM330 ﾘﾌﾄｼﾘﾝﾀﾞｱｯｾﾝ	1	INC.1-15
-	211F0-50181		CYL-ASSY,LIFT VFM350 ﾘﾌﾄｼﾘﾝﾀﾞｱｯｾﾝ	1	INC.1-15
-	211F0-50191		CYL-ASSY,LIFT VFM366 ﾘﾌﾄｼﾘﾝﾀﾞｱｯｾﾝ	1	INC.1-15
-	211F0-50201		CYL-ASSY,LIFT VFM370 ﾘﾌﾄｼﾘﾝﾀﾞｱｯｾﾝ	1	INC.1-15
-	211F0-50211		CYL-ASSY,LIFT VFM375 ﾘﾌﾄｼﾘﾝﾀﾞｱｯｾﾝ	1	INC.1-15
-	211F0-50221		CYL-ASSY,LIFT VFM400 ﾘﾌﾄｼﾘﾝﾀﾞｱｯｾﾝ	1	INC.1-15
-	211F0-50231		CYL-ASSY,LIFT VFM425 ﾘﾌﾄｼﾘﾝﾀﾞｱｯｾﾝ	1	INC.1-15
-	211F0-50241		CYL-ASSY,LIFT VFM450 ﾘﾌﾄｼﾘﾝﾀﾞｱｯｾﾝ	1	INC.1-15
-	211F0-50251		CYL-ASSY,LIFT VFM475 ﾘﾌﾄｼﾘﾝﾀﾞｱｯｾﾝ	1	INC.1-15
-	211F0-50261		CYL-ASSY,LIFT VFM500 ﾘﾌﾄｼﾘﾝﾀﾞｱｯｾﾝ	1	INC.1-15
-	211F0-50271		CYL-ASSY,LIFT VFM550 ﾘﾌﾄｼﾘﾝﾀﾞｱｯｾﾝ	1	INC.1-15
-	211F0-50281		CYL-ASSY,LIFT VFM600 ﾘﾌﾄｼﾘﾝﾀﾞｱｯｾﾝ	1	INC.1-15
1	211F0-50311		TUBE VFM200 ﾁｭｰﾌﾞ	1	
-	211F0-50321		TUBE VFM225 ﾁｭｰﾌﾞ	1	
-	211F0-50331		TUBE VFM250 ﾁｭｰﾌﾞ	1	
-	211F0-50341		TUBE VFM270 ﾁｭｰﾌﾞ	1	
-	211F0-50351		TUBE VFM275 ﾁｭｰﾌﾞ	1	
-	211F0-50301		TUBE VFM300 ﾁｭｰﾌﾞ	1	
-	211F0-50361		TUBE VFM325 ﾁｭｰﾌﾞ	1	
-	211F0-50371		TUBE VFM330 ﾁｭｰﾌﾞ	1	
-	211F0-50381		TUBE VFM350 ﾁｭｰﾌﾞ	1	
-	211F0-50391		TUBE VFM366 ﾁｭｰﾌﾞ	1	
-	211F0-50401		TUBE VFM370 ﾁｭｰﾌﾞ	1	
-	211F0-50411		TUBE VFM375 ﾁｭｰﾌﾞ	1	
-	211F0-50421		TUBE VFM400 ﾁｭｰﾌﾞ	1	
-	211F0-50431		TUBE VFM425 ﾁｭｰﾌﾞ	1	
-	211F0-50441		TUBE VFM450 ﾁｭｰﾌﾞ	1	
-	211F0-50451		TUBE VFM475 ﾁｭｰﾌﾞ	1	
-	211F0-50461		TUBE VFM500 ﾁｭｰﾌﾞ	1	
-	211F0-50471		TUBE VFM550 ﾁｭｰﾌﾞ	1	
-	211F0-50481		TUBE VFM600 ﾁｭｰﾌﾞ	1	
2	210F0-50511		ROD,PISTON VFM200 ﾛｯﾄﾞ	1	
-	210F0-50521		ROD,PISTON VFM225 ﾛｯﾄﾞ	1	
-	54238-40311		ROD,PISTON VFM250 ﾛｯﾄﾞ	1	
-	27390-50321		ROD,PISTON VFM270 ﾛｯﾄﾞ	1	
-	54238-40321		ROD,PISTON VFM275 ﾛｯﾄﾞ	1	
-	54238-40301		ROD,PISTON VFM300 ﾛｯﾄﾞ	1	
-	27390-50331		ROD,PISTON VFM325 ﾛｯﾄﾞ	1	
-	54238-40331		ROD,PISTON VFM330 ﾛｯﾄﾞ	1	
-	54238-40341		ROD,PISTON VFM350 ﾛｯﾄﾞ	1	
-	27390-50341		ROD,PISTON VFM366 ﾛｯﾄﾞ	1	
-	27390-50351		ROD,PISTON VFM370 ﾛｯﾄﾞ	1	
-	54238-40351		ROD,PISTON VFM375 ﾛｯﾄﾞ	1	

FIG.191 LIFT CYLINDER(FRONT)[VFM18G]

(M5010510) リフトシリンダ(フロント)

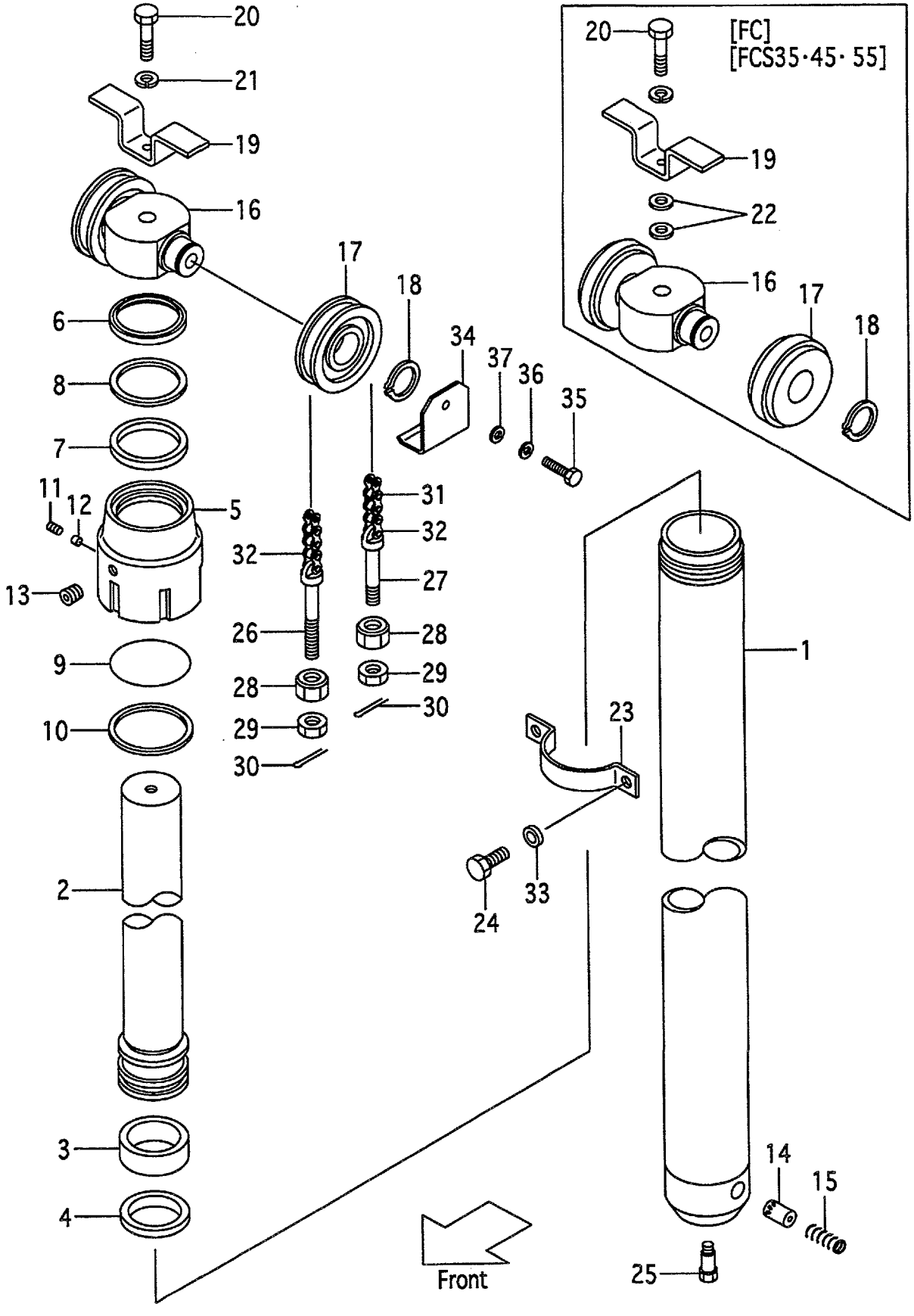

A:VFM18G(1.0t)
B:VFM18G(1.5t)
C:VFM18G(1.8t)

FIG.191
(M5010510)

Item No	Part No.	Mark	Description		Req'd	Remarks : Serial No.
-	27390-50361		ROD,PISTON VFM400	ﾛｯﾄﾞ	1	
-	27390-50371		ROD,PISTON VFM425	ﾛｯﾄﾞ	1	
-	27390-50381		ROD,PISTON VFM450	ﾛｯﾄﾞ	1	
-	27390-50391		ROD,PISTON VFM475	ﾛｯﾄﾞ	1	
-	27390-50401		ROD,PISTON VFM500	ﾛｯﾄﾞ	1	
-	27390-50411		ROD,PISTON VFM550	ﾛｯﾄﾞ	1	
-	27390-50421		ROD,PISTON VFM600	ﾛｯﾄﾞ	1	
3	22518-40121	*	WEARING	ｳｪｱﾘﾝｸﾞ	1	
4	54238-42011	*	RING,PISTON	ﾘﾝｸﾞ	1	
5	29560-82012		CAP	ｷｬｯﾌﾟ	1	
6	25808-42481	*	SEAL,DUST	ｼｰﾙ	1	
7	24230-82211	*	PACKING	ﾊﾟｯｷﾝｸﾞ	1	
8	24230-82221	*	RING,BACK-UP	ﾘﾝｸﾞ	1	
9	24230-82291	*	O-RING	Oﾘﾝｸﾞ	1	
10	24230-82231	*	RING,BACK-UP	ﾘﾝｸﾞ	1	
11	25908-44101		PLUG	ﾌﾟﾗｸﾞ	1	
12	25908-44111		PLUG,NYLON	ﾌﾟﾗｸﾞ	1	
13	23870-52871		PLUG	ﾌﾟﾗｸﾞ	1	
14	211F0-82551		PISTON	ﾋﾟｽﾄﾝ	1	
15	24389-46021		SPRING	ｽﾌﾟﾘﾝｸﾞ	1	
16	215T0-83001		HEAD,PISTON	ﾍｯﾄﾞ	1	
-	27390-82011		HEAD,PISTON	ﾍｯﾄﾞ	1	[FC][FCS35][FCS55][FCS45]
17	216G8-42031		SHEAVE	ｼｰﾌﾞ	2	
-	90789-40100		SHEAVE	ｼｰﾌﾞ	2	[FC][FCS35][FCS55][FCS45]
18	02100-00035		RING,SNAP	ｽﾅｯﾌﾟﾘﾝｸﾞ	2	
-	02100-00040		RING,SNAP	ｽﾅｯﾌﾟﾘﾝｸﾞ	2	[FC][FCS35][FCS55][FCS45]
19	215T0-83021		STOPPER	ｽﾄｯﾊﾟ	1	
-	27970-82211		STOPPER	ｽﾄｯﾊﾟ	1	[FC][FCS35][FCS55][FCS45]
20	01100-16060		BOLT	ﾎﾞﾙﾄ	1	
-	01100-16065		BOLT	ﾎﾞﾙﾄ	1	[FC][FCS35][FCS55][FCS45]
21	02010-00016		WASHER	ﾜｯｼｬ	1	
22	02000-00016		WASHER	ﾜｯｼｬ	2	[FC][FCS35][FCS55][FCS45]
23	27390-82101		SUPPORT	ｻﾎﾟｰﾄ	1	
24	01103-10020		BOLT	ﾎﾞﾙﾄ	2	
25	214A0-82831		BOLT	ﾎﾞﾙﾄ	1	
26	218G8-42501		PIN,ANCHOR	ﾋﾟﾝ	2	
-	510F5-54051		PIN,ANCHOR	ﾋﾟﾝ	2	[FC][FCS35][FCS55][FCS45]
27	218G8-42521		PIN,ANCHOR	ﾋﾟﾝ	2	
-	510F5-54061		PIN,ANCHOR	ﾋﾟﾝ	2	[FC][FCS35][FCS55][FCS45]
28	22118-40181		NUT	ﾅｯﾄ	4	
29	01400-00014		NUT	ﾅｯﾄ	4	
30	02200-03030		PIN	ﾋﾟﾝ	4	
31	218G8-45611		CHAIN VFM200	ﾁｪｰﾝ	2	
-	218G8-45691		CHAIN VFM225	ﾁｪｰﾝ	2	
-	218G8-45701		CHAIN VFM250	ﾁｪｰﾝ	2	
-	218G8-45831		CHAIN VFM270	ﾁｪｰﾝ	2	
-	218G8-45851		CHAIN VFM275	ﾁｪｰﾝ	2	
-	218G8-45931		CHAIN VFM300	ﾁｪｰﾝ	2	
-	218G8-46011		CHAIN VFM325	ﾁｪｰﾝ	2	
-	218G8-46031		CHAIN VFM330	ﾁｪｰﾝ	2	

FIG.191 LIFT CYLINDER(FRONT)[VFM18G]

(M5010510) リフトシリンダ(フロント)

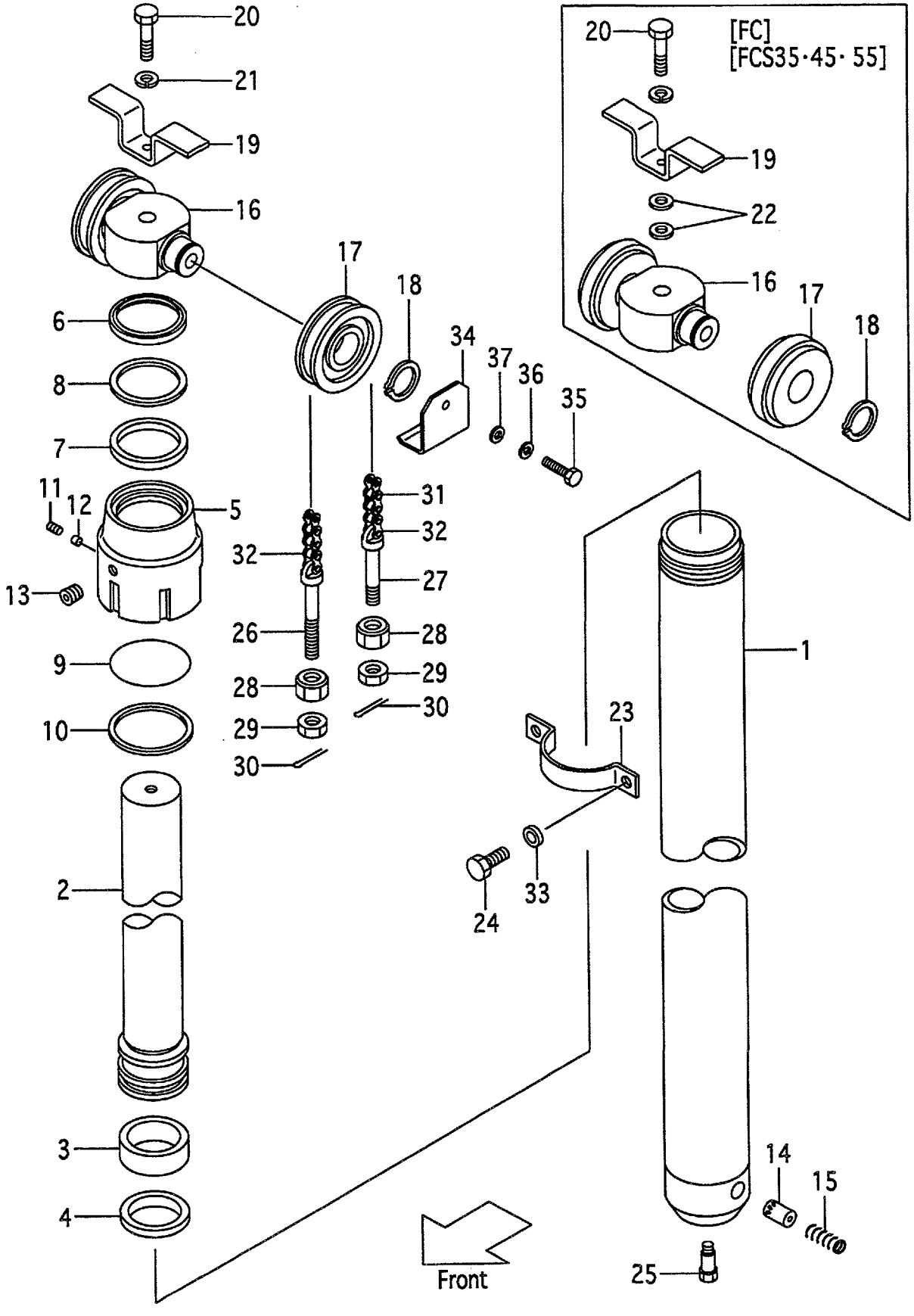

A:VFM18G(1.0t)
B:VFM18G(1.5t)
C:VFM18G(1.8t)

FIG.191
(M5010510)

Item No	Part No.	Mark	Description		Req'd	Remarks : Serial No.
-	218G8-46091		CHAIN VFM350	ﾁｪｰﾝ	2	
-	218G8-46151		CHAIN VFM366	ﾁｪｰﾝ	2	
-	218G8-46151		CHAIN VFM370	ﾁｪｰﾝ	2	
-	218G8-46171		CHAIN VFM375	ﾁｪｰﾝ	2	
-	218G8-46271		CHAIN VFM400	ﾁｪｰﾝ	2	
-	218G8-46351		CHAIN VFM425	ﾁｪｰﾝ	2	
-	218G8-46431		CHAIN VFM450	ﾁｪｰﾝ	2	
-	218G8-46511		CHAIN VFM475	ﾁｪｰﾝ	2	
-	218G8-46591		CHAIN VFM500	ﾁｪｰﾝ	2	
-	218G8-46791		CHAIN VFM550	ﾁｪｰﾝ	2	
-	218G8-46951		CHAIN VFM600	ﾁｪｰﾝ	2	
-	09001-08043		CHAIN VFM200	ﾁｪｰﾝ	2	[FC][FCS35][FCS55][FCS45]
-	09001-08047		CHAIN VFM225	ﾁｪｰﾝ	2	[FC][FCS35][FCS55][FCS45]
-	09001-08053		CHAIN VFM250	ﾁｪｰﾝ	2	[FC][FCS35][FCS55][FCS45]
-	09001-08055		CHAIN VFM270	ﾁｪｰﾝ	2	[FC][FCS35][FCS55][FCS45]
-	09001-08057		CHAIN VFM275	ﾁｪｰﾝ	2	[FC][FCS35][FCS55][FCS45]
-	09001-08061		CHAIN VFM300	ﾁｪｰﾝ	2	[FC][FCS35][FCS55][FCS45]
-	09001-08067		CHAIN VFM325	ﾁｪｰﾝ	2	[FC][FCS35][FCS55][FCS45]
-	09001-08067		CHAIN VFM330	ﾁｪｰﾝ	2	[FC][FCS35][FCS55][FCS45]
-	09001-08071		CHAIN VFM350	ﾁｪｰﾝ	2	[FC][FCS35][FCS55][FCS45]
-	09001-08075		CHAIN VFM366	ﾁｪｰﾝ	2	[FC][FCS35][FCS55][FCS45]
-	09001-08075		CHAIN VFM370	ﾁｪｰﾝ	2	[FC][FCS35][FCS55][FCS45]
-	09001-08077		CHAIN VFM375	ﾁｪｰﾝ	2	[FC][FCS35][FCS55][FCS45]
-	09001-08083		CHAIN VFM400	ﾁｪｰﾝ	2	[FC][FCS35][FCS55][FCS45]
-	09001-08089		CHAIN VFM425	ﾁｪｰﾝ	2	[FC][FCS35][FCS55][FCS45]
-	09001-08093		CHAIN VFM450	ﾁｪｰﾝ	2	[FC][FCS35][FCS55][FCS45]
-	09001-08099		CHAIN VFM475	ﾁｪｰﾝ	2	[FC][FCS35][FCS55][FCS45]
-	09001-08103		CHAIN VFM500	ﾁｪｰﾝ	2	[FC][FCS35][FCS55][FCS45]
-	09001-08115		CHAIN VFM550	ﾁｪｰﾝ	2	[FC][FCS35][FCS55][FCS45]
-	09001-08125		CHAIN VFM600	ﾁｪｰﾝ	2	[FC][FCS35][FCS55][FCS45]
32	218G8-42701		LINK	ﾘﾝｸ	4	
33	02011-00010		WASHER	ﾜｯｼｬ	2	
34	57393-02041		COVER	ｶﾊﾞｰ	2	[EXD][EXE][EXN]
35	01100-16016		BOLT	ﾎﾞﾙﾄ	2	[EXD][EXE][EXN]
36	02010-00016		WASHER	ﾜｯｼｬ	2	[EXD][EXE][EXN]
37	02000-00016		WASHER	ﾜｯｼｬ	2	[EXD][EXE][EXN]
K1	27390-59801		KIT,OVERHAUL	ｵｰﾊﾞﾎｰﾙｷｯﾄ	1	INC.3,4,6-10

FIG.192 LIFT CYLINDER(REAR)[VFM18G]

(M5010520) リフトシリンダ(リヤー)

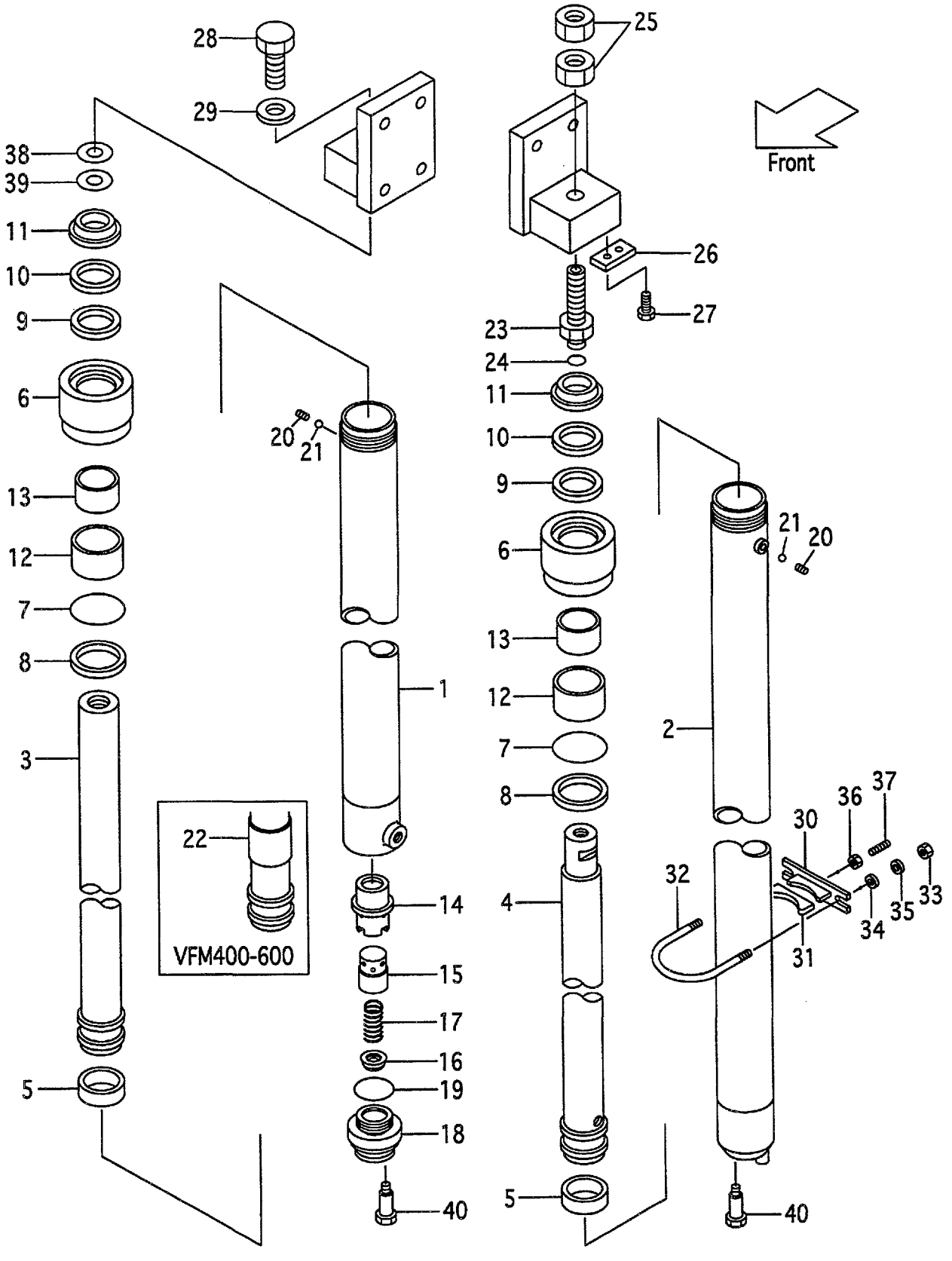

A:VFM18G(1.0t)
B:VFM18G(1.5t)
C:VFM18G(1.8t)

FIG.192
(M5010520)

Item No	Part No.	Mark	Description	Req'd	Remarks : Serial No.
A1	216G0-50211		CYL-ASSY,LIFT,RH VFM200 ﾘﾌﾄｼﾘﾝﾀﾞｱｯｾﾝ	1	INC.1,3,5-22
-	216G0-50221		CYL-ASSY,LIFT,RH VFM225 ﾘﾌﾄｼﾘﾝﾀﾞｱｯｾﾝ	1	INC.1,3,5-22
-	216G0-50231		CYL-ASSY,LIFT,RH VFM250 ﾘﾌﾄｼﾘﾝﾀﾞｱｯｾﾝ	1	INC.1,3,5-22
-	216G0-50241		CYL-ASSY,LIFT,RH VFM270 ﾘﾌﾄｼﾘﾝﾀﾞｱｯｾﾝ	1	INC.1,3,5-22
-	216G0-50251		CYL-ASSY,LIFT,RH VFM275 ﾘﾌﾄｼﾘﾝﾀﾞｱｯｾﾝ	1	INC.1,3,5-22
-	216G0-50201		CYL-ASSY,LIFT,RH VFM300 ﾘﾌﾄｼﾘﾝﾀﾞｱｯｾﾝ	1	INC.1,3,5-22
-	216G0-50261		CYL-ASSY,LIFT,RH VFM325 ﾘﾌﾄｼﾘﾝﾀﾞｱｯｾﾝ	1	INC.1,3,5-22
-	216G0-50271		CYL-ASSY,LIFT,RH VFM330 ﾘﾌﾄｼﾘﾝﾀﾞｱｯｾﾝ	1	INC.1,3,5-22
-	216G0-50281		CYL-ASSY,LIFT,RH VFM350 ﾘﾌﾄｼﾘﾝﾀﾞｱｯｾﾝ	1	INC.1,3,5-22
-	216G0-50291		CYL-ASSY,LIFT,RH VFM366 ﾘﾌﾄｼﾘﾝﾀﾞｱｯｾﾝ	1	INC.1,3,5-22
-	216G0-50301		CYL-ASSY,LIFT,RH VFM370 ﾘﾌﾄｼﾘﾝﾀﾞｱｯｾﾝ	1	INC.1,3,5-22
-	216G0-50311		CYL-ASSY,LIFT,RH VFM375 ﾘﾌﾄｼﾘﾝﾀﾞｱｯｾﾝ	1	INC.1,3,5-22
-	216G0-50321		CYL-ASSY,LIFT,RH VFM400 ﾘﾌﾄｼﾘﾝﾀﾞｱｯｾﾝ	1	INC.1,3,5-22
-	216G0-50331		CYL-ASSY,LIFT,RH VFM425 ﾘﾌﾄｼﾘﾝﾀﾞｱｯｾﾝ	1	INC.1,3,5-22
-	216G0-50341		CYL-ASSY,LIFT,RH VFM450 ﾘﾌﾄｼﾘﾝﾀﾞｱｯｾﾝ	1	INC.1,3,5-22
-	216G0-50351		CYL-ASSY,LIFT,RH VFM475 ﾘﾌﾄｼﾘﾝﾀﾞｱｯｾﾝ	1	INC.1,3,5-22
-	216G0-50361		CYL-ASSY,LIFT,RH VFM500 ﾘﾌﾄｼﾘﾝﾀﾞｱｯｾﾝ	1	INC.1,3,5-22
-	216G0-50371		CYL-ASSY,LIFT,RH VFM550 ﾘﾌﾄｼﾘﾝﾀﾞｱｯｾﾝ	1	INC.1,3,5-22
-	216G0-50381		CYL-ASSY,LIFT,RH VFM600 ﾘﾌﾄｼﾘﾝﾀﾞｱｯｾﾝ	1	INC.1,3,5-22
A2	216G0-50411		CYL-ASSY,LIFT,LH VFM200 ﾘﾌﾄｼﾘﾝﾀﾞｱｯｾﾝ	1	INC.2,4-13,20-22
-	216G0-50421		CYL-ASSY,LIFT,LH VFM225 ﾘﾌﾄｼﾘﾝﾀﾞｱｯｾﾝ	1	INC.2,4-13,20-22
-	216G0-50431		CYL-ASSY,LIFT,LH VFM250 ﾘﾌﾄｼﾘﾝﾀﾞｱｯｾﾝ	1	INC.2,4-13,20-22
-	216G0-50441		CYL-ASSY,LIFT,LH VFM270 ﾘﾌﾄｼﾘﾝﾀﾞｱｯｾﾝ	1	INC.2,4-13,20-22
-	216G0-50451		CYL-ASSY,LIFT,LH VFM275 ﾘﾌﾄｼﾘﾝﾀﾞｱｯｾﾝ	1	INC.2,4-13,20-22
-	216G0-50401		CYL-ASSY,LIFT,LH VFM300 ﾘﾌﾄｼﾘﾝﾀﾞｱｯｾﾝ	1	INC.2,4-13,20-22

FIG.192 LIFT CYLINDER(REAR)[VFM18G]

(M5010520) リフトシリンダ(リヤー)

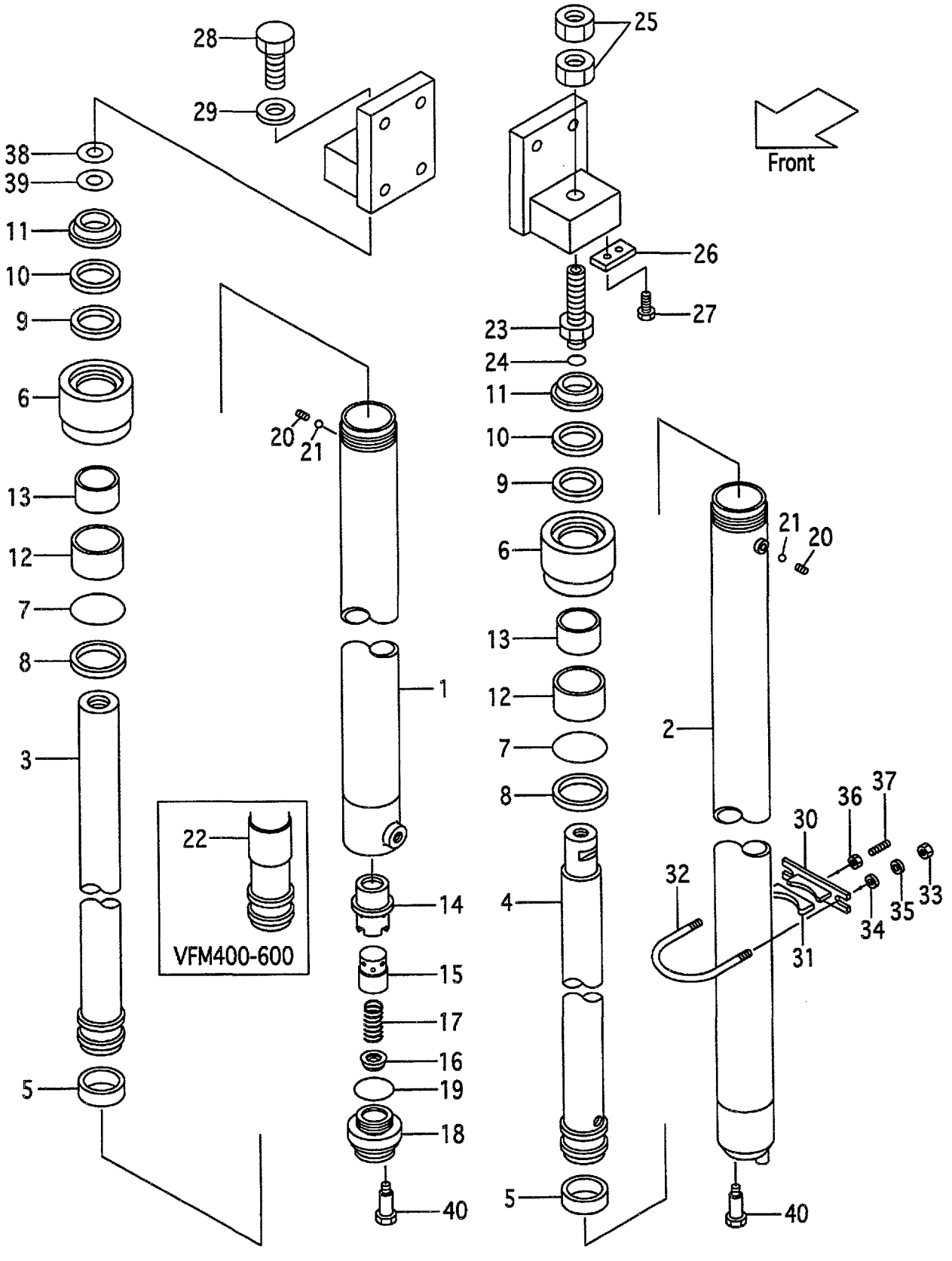

A:VFM18G(1.0t)
B:VFM18G(1.5t)
C:VFM18G(1.8t)

FIG.192
(M5010520)

Item No	Part No.	Mark	Description	Req'd	Remarks : Serial No.
-	216G0-50461		CYL-ASSY,LIFT,LH VFM325 リフトシリンダアッセン	1	INC.2,4-13,20-22
-	216G0-50471		CYL-ASSY,LIFT,LH VFM330 リフトシリンダアッセン	1	INC.2,4-13,20-22
-	216G0-50481		CYL-ASSY,LIFT,LH VFM350 リフトシリンダアッセン	1	INC.2,4-13,20-22
-	216G0-50491		CYL-ASSY,LIFT,LH VFM366 リフトシリンダアッセン	1	INC.2,4-13,20-22
-	216G0-50501		CYL-ASSY,LIFT,LH VFM370 リフトシリンダアッセン	1	INC.2,4-13,20-22
-	216G0-50511		CYL-ASSY,LIFT,LH VFM375 リフトシリンダアッセン	1	INC.2,4-13,20-22
-	216G0-50521		CYL-ASSY,LIFT,LH VFM400 リフトシリンダアッセン	1	INC.2,4-13,20-22
-	216G0-50531		CYL-ASSY,LIFT,LH VFM425 リフトシリンダアッセン	1	INC.2,4-13,20-22
-	216G0-50541		CYL-ASSY,LIFT,LH VFM450 リフトシリンダアッセン	1	INC.2,4-13,20-22
-	216G0-50551		CYL-ASSY,LIFT,LH VFM475 リフトシリンダアッセン	1	INC.2,4-13,20-22
-	216G0-50561		CYL-ASSY,LIFT,LH VFM500 リフトシリンダアッセン	1	INC.2,4-13,20-22
-	216G0-50571		CYL-ASSY,LIFT,LH VFM550 リフトシリンダアッセン	1	INC.2,4-13,20-22
-	216G0-50581		CYL-ASSY,LIFT,LH VFM600 リフトシリンダアッセン	1	INC.2,4-13,20-22
1	216G0-50611		TUBE RH VFM200 チューブ	1	
-	216G0-50621		TUBE RH VFM225 チューブ	1	
-	216G0-50631		TUBE RH VFM250 チューブ	1	
-	216G0-50641		TUBE RH VFM270 チューブ	1	
-	216G0-50651		TUBE RH VFM275 チューブ	1	
-	216G0-50601		TUBE RH VFM300 チューブ	1	
-	216G0-50661		TUBE RH VFM325 チューブ	1	
-	216G0-50671		TUBE RH VFM330 チューブ	1	
-	216G0-50681		TUBE RH VFM350 チューブ	1	
-	234A0-50601		TUBE RH VFM366 チューブ	1	
-	216G0-50701		TUBE RH VFM370 チューブ	1	
-	216G0-50711		TUBE RH VFM375 チューブ	1	
-	216G0-50721		TUBE RH VFM400 チューブ	1	
-	216G0-50731		TUBE RH VFM425 チューブ	1	
-	216G0-50741		TUBE RH VFM450 チューブ	1	
-	216G0-50751		TUBE RH VFM475 チューブ	1	
-	216G0-50761		TUBE RH VFM500 チューブ	1	
-	216G0-50771		TUBE RH VFM550 チューブ	1	
-	216G0-50781		TUBE RH VFM600 チューブ	1	
2	216G0-50811		TUBE LH VFM200 チューブ	1	
-	216G0-50821		TUBE LH VFM225 チューブ	1	
-	216G0-50831		TUBE LH VFM250 チューブ	1	
-	216G0-50841		TUBE LH VFM270 チューブ	1	
-	216G0-50851		TUBE LH VFM275 チューブ	1	

FIG.192 LIFT CYLINDER(REAR)[VFM18G]

(M5010520) リフトシリンダ(リヤー)

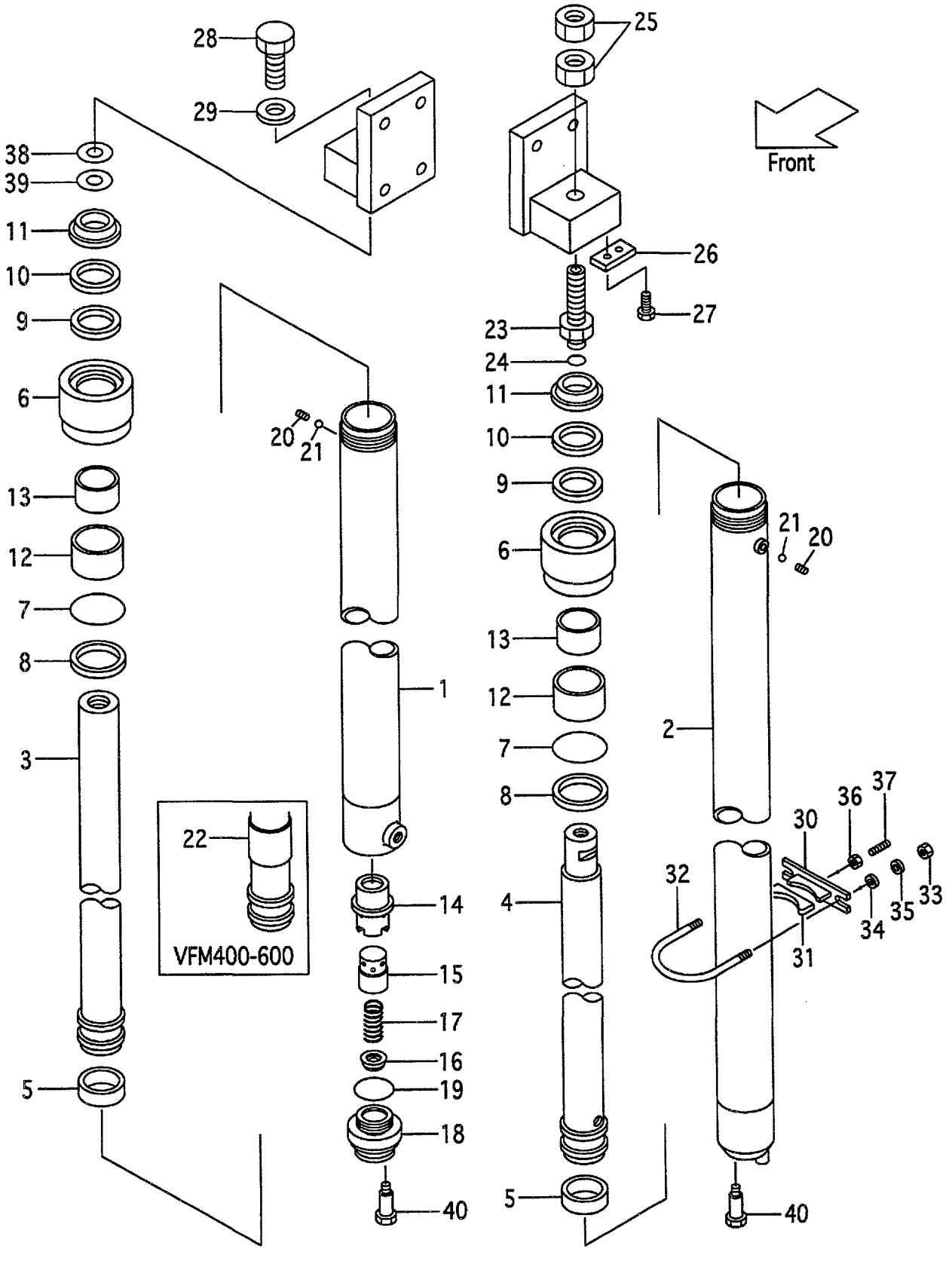

A:VFM18G(1.0t)
B:VFM18G(1.5t)
C:VFM18G(1.8t)

FIG.192
(M5010520)

Item No	Part No.	Mark	Description	Req'd	Remarks : Serial No.
-	216G0-50801		TUBE LH VFM300 ﾁｭｰﾌﾞ	1	
-	216G0-50861		TUBE LH VFM325 ﾁｭｰﾌﾞ	1	
-	216G0-50871		TUBE LH VFM330 ﾁｭｰﾌﾞ	1	
-	216G0-50881		TUBE LH VFM350 ﾁｭｰﾌﾞ	1	
-	234A0-50801		TUBE LH VFM366 ﾁｭｰﾌﾞ	1	
-	216G0-50901		TUBE LH VFM370 ﾁｭｰﾌﾞ	1	
-	216G0-50911		TUBE LH VFM375 ﾁｭｰﾌﾞ	1	
-	216G0-50921		TUBE LH VFM400 ﾁｭｰﾌﾞ	1	
-	216G0-50931		TUBE LH VFM425 ﾁｭｰﾌﾞ	1	
-	216G0-50941		TUBE LH VFM450 ﾁｭｰﾌﾞ	1	
-	216G0-50951		TUBE LH VFM475 ﾁｭｰﾌﾞ	1	
-	216G0-50961		TUBE LH VFM500 ﾁｭｰﾌﾞ	1	
-	216G0-50971		TUBE LH VFM550 ﾁｭｰﾌﾞ	1	
-	216G0-50981		TUBE LH VFM600 ﾁｭｰﾌﾞ	1	
3	211F0-51511		ROD,PISTON,RH VFM200 ﾛｯﾄﾞ	1	
-	211F0-51521		ROD,PISTON,RH VFM225 ﾛｯﾄﾞ	1	
-	211F0-51531		ROD,PISTON,RH VFM250 ﾛｯﾄﾞ	1	
-	211F0-51541		ROD,PISTON,RH VFM270 ﾛｯﾄﾞ	1	
-	211F0-51551		ROD,PISTON,RH VFM275 ﾛｯﾄﾞ	1	
-	211F0-51501		ROD,PISTON,RH VFM300 ﾛｯﾄﾞ	1	
-	211F0-51561		ROD,PISTON,RH VFM325 ﾛｯﾄﾞ	1	
-	211F0-51571		ROD,PISTON,RH VFM330 ﾛｯﾄﾞ	1	
-	211F0-51581		ROD,PISTON,RH VFM350 ﾛｯﾄﾞ	1	
-	211F0-51591		ROD,PISTON,RH VFM366 ﾛｯﾄﾞ	1	
-	211F0-51601		ROD,PISTON,RH VFM370 ﾛｯﾄﾞ	1	
-	211F0-51611		ROD,PISTON,RH VFM375 ﾛｯﾄﾞ	1	
-	211F0-51621		ROD,PISTON,RH VFM400 ﾛｯﾄﾞ	1	
-	211F0-51631		ROD,PISTON,RH VFM425 ﾛｯﾄﾞ	1	
-	211F0-51641		ROD,PISTON,RH VFM450 ﾛｯﾄﾞ	1	
-	211F0-51651		ROD,PISTON,RH VFM475 ﾛｯﾄﾞ	1	
-	211F0-51661		ROD,PISTON,RH VFM500 ﾛｯﾄﾞ	1	
-	211F0-51671		ROD,PISTON,RH VFM550 ﾛｯﾄﾞ	1	
-	211F0-51681		ROD,PISTON,RH VFM600 ﾛｯﾄﾞ	1	
4	211F0-51711		ROD,PISTON,LH VFM200 ﾛｯﾄﾞ	1	
-	211F0-51721		ROD,PISTON,LH VFM225 ﾛｯﾄﾞ	1	
-	211F0-51731		ROD,PISTON,LH VFM250 ﾛｯﾄﾞ	1	
-	211F0-51741		ROD,PISTON,LH VFM270 ﾛｯﾄﾞ	1	
-	211F0-51751		ROD,PISTON,LH VFM275 ﾛｯﾄﾞ	1	
-	211F0-51701		ROD,PISTON,LH VFM300 ﾛｯﾄﾞ	1	
-	211F0-51761		ROD,PISTON,LH VFM325 ﾛｯﾄﾞ	1	
-	211F0-51771		ROD,PISTON,LH VFM330 ﾛｯﾄﾞ	1	
-	211F0-51781		ROD,PISTON,LH VFM350 ﾛｯﾄﾞ	1	
-	211F0-51791		ROD,PISTON,LH VFM366 ﾛｯﾄﾞ	1	
-	211F0-51801		ROD,PISTON,LH VFM370 ﾛｯﾄﾞ	1	
-	211F0-51811		ROD,PISTON,LH VFM375 ﾛｯﾄﾞ	1	
-	211F0-51821		ROD,PISTON,LH VFM400 ﾛｯﾄﾞ	1	
-	211F0-51831		ROD,PISTON,LH VFM425 ﾛｯﾄﾞ	1	
-	211F0-51841		ROD,PISTON,LH VFM450 ﾛｯﾄﾞ	1	
-	211F0-51851		ROD,PISTON,LH VFM475 ﾛｯﾄﾞ	1	
-	211F0-51861		ROD,PISTON,LH VFM500 ﾛｯﾄﾞ	1	

FIG.192 LIFT CYLINDER(REAR)[VFM18G]

(M5010520) リフトシリンダ(リヤー)

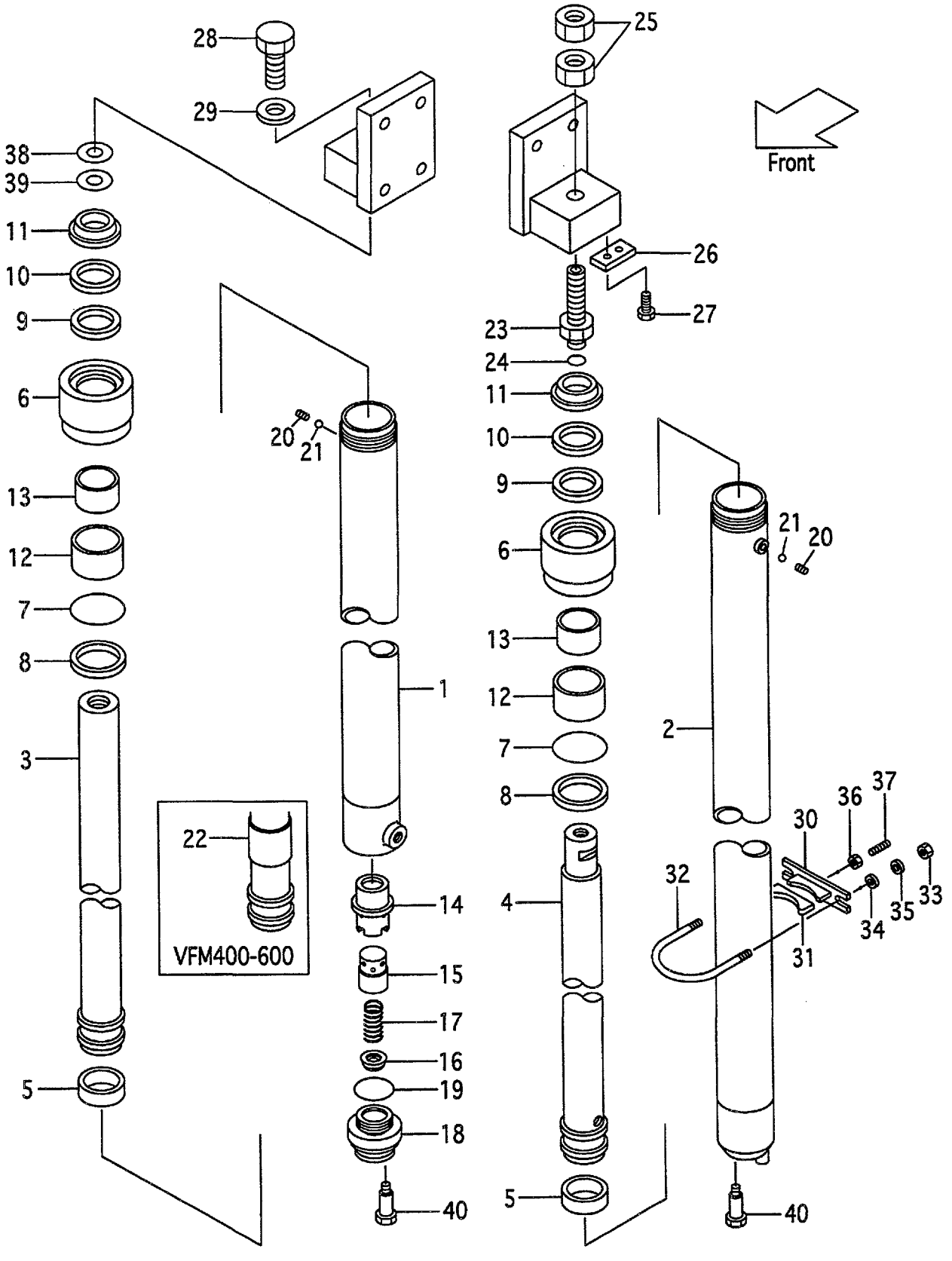

A:VFM18G(1.0t)
B:VFM18G(1.5t)
C:VFM18G(1.8t)

FIG.192
(M5010520)

Item No	Part No.	Mark	Description		Req'd	Remarks : Serial No.
-	211F0-51871		ROD,PISTON,LH VFM550	ﾛｯﾄﾞ	1	
-	211F0-51881		ROD,PISTON,LH VFM600	ﾛｯﾄﾞ	1	
5	22580-53321	*	WEARING	ｳｪｱﾘﾝｸﾞ	2	
6	216G0-53011		CAP,CYL	ｷｬｯﾌﾟ	2	
7	210F8-42631	*	O-RING	Oﾘﾝｸﾞ	2	
8	214A0-53681	*	RING,BACK-UP	ﾘﾝｸﾞ	2	
9	23658-52051	*	PACKING	ﾊﾟｯｷﾝｸﾞ	2	
10	23658-52061	*	RING,BACK-UP	ﾘﾝｸﾞ	2	
11	210F0-53691	*	SEAL	ｼｰﾙ	2	
A3	216G0-53051		SLEEVE-ASSY	ｽﾘｰﾌﾞｱｯｾﾝ	2	INC.12,13
12	216G0-53061		SLEEVE	ｽﾘｰﾌﾞ	2	
13	22678-52021		BUSHING	ﾌﾞｯｼﾝｸﾞ	2	
14	53658-43021		SLEEVE	ｽﾘｰﾌﾞ	1	[RH]
15	53658-43011		PISTON	ﾋﾟｽﾄﾝ	1	[RH]
16	53658-43001		VALVE,CHECK	ﾊﾞﾙﾌﾞ	1	[RH]
17	53658-43031		SPRING	ｽﾌﾟﾘﾝｸﾞ	1	[RH]
18	53658-43041		PLUG	ﾌﾟﾗｸﾞ	1	[RH]
19	03320-00340	*	O-RING	Oﾘﾝｸﾞ	1	[RH]
20	234A0-52611		PLUG	ﾌﾟﾗｸﾞ	2	
21	03190-00006		BALL	ﾎﾞｰﾙ	2	
22	210F0-53701		SPACER	ｽﾍﾟｰｻ	1	[VFM400-500]
-	210F0-53701		SPACER	ｽﾍﾟｰｻ	2	[VFM550-600]
23	23200-50811		NIPPLE	ﾆｯﾌﾟﾙ	1	[LH]
24	03320-00180		O-RING	Oﾘﾝｸﾞ	1	[LH]
25	23200-50841		NUT	ﾅｯﾄ	2	[LH]
26	23648-50161		PLATE,KEY	ﾌﾟﾚｰﾄ	1	[LH]
27	01184-10020		BOLT & WASHER	ﾎﾞﾙﾄ & ﾜｯｼｬ	2	[LH]
28	01103-14040		BOLT	ﾎﾞﾙﾄ	1	[RH]
29	02011-00014		WASHER	ﾜｯｼｬ	1	[RH]
A7	215E8-42171		SUPPORT-ASSY	ｻﾎﾟｰﾄｱｯｾﾝ	2	[VFM200-375] INC.30,31
-	215E8-42171		SUPPORT-ASSY	ｻﾎﾟｰﾄｱｯｾﾝ	4	[VFM400-600] INC.30,31
30	215E8-42181		SUPPORT	ｻﾎﾟｰﾄ	2	[VFM200-375]
-	215E8-42181		SUPPORT	ｻﾎﾟｰﾄ	4	[VFM400-600]
31	24868-42111		RUBBER	ﾗﾊﾞｰ	2	[VFM200-375]
-	24868-42111		RUBBER	ﾗﾊﾞｰ	4	[VFM400-600]
32	216G8-43161		U-BOLT	Uﾎﾞﾙﾄ	2	[VFM200-375]
-	216G8-43161		U-BOLT	Uﾎﾞﾙﾄ	4	[VFM400-600]
33	234A8-42561		NUT	ﾅｯﾄ	4	[VFM200-375]
-	234A8-42561		NUT	ﾅｯﾄ	8	[VFM400-600]
34	02000-20010		WASHER	ﾜｯｼｬ	4	[VFM200-375]
-	02000-20010		WASHER	ﾜｯｼｬ	8	[VFM400-600]
35	02010-20010		WASHER	ﾜｯｼｬ	4	[VFM200-375]
-	02010-20010		WASHER	ﾜｯｼｬ	8	[VFM400-600]
36	234A8-42571		NUT	ﾅｯﾄ	2	[VFM200-375]
-	234A8-42571		NUT	ﾅｯﾄ	4	[VFM400-600]
37	215E8-42231		BOLT	ﾎﾞﾙﾄ	2	[VFM200-375]
-	215E8-42231		BOLT	ﾎﾞﾙﾄ	4	[VFM400-600]
38	23917-42191		SHIM	ｼﾑ	5	
39	22679-43831		SHIM	ｼﾑ	5	
40	214A8-42661		BOLT	ﾎﾞﾙﾄ	2	

FIG.192 LIFT CYLINDER(REAR)[VFM18G]

(M5010520) リフトシリンダ(リヤー)

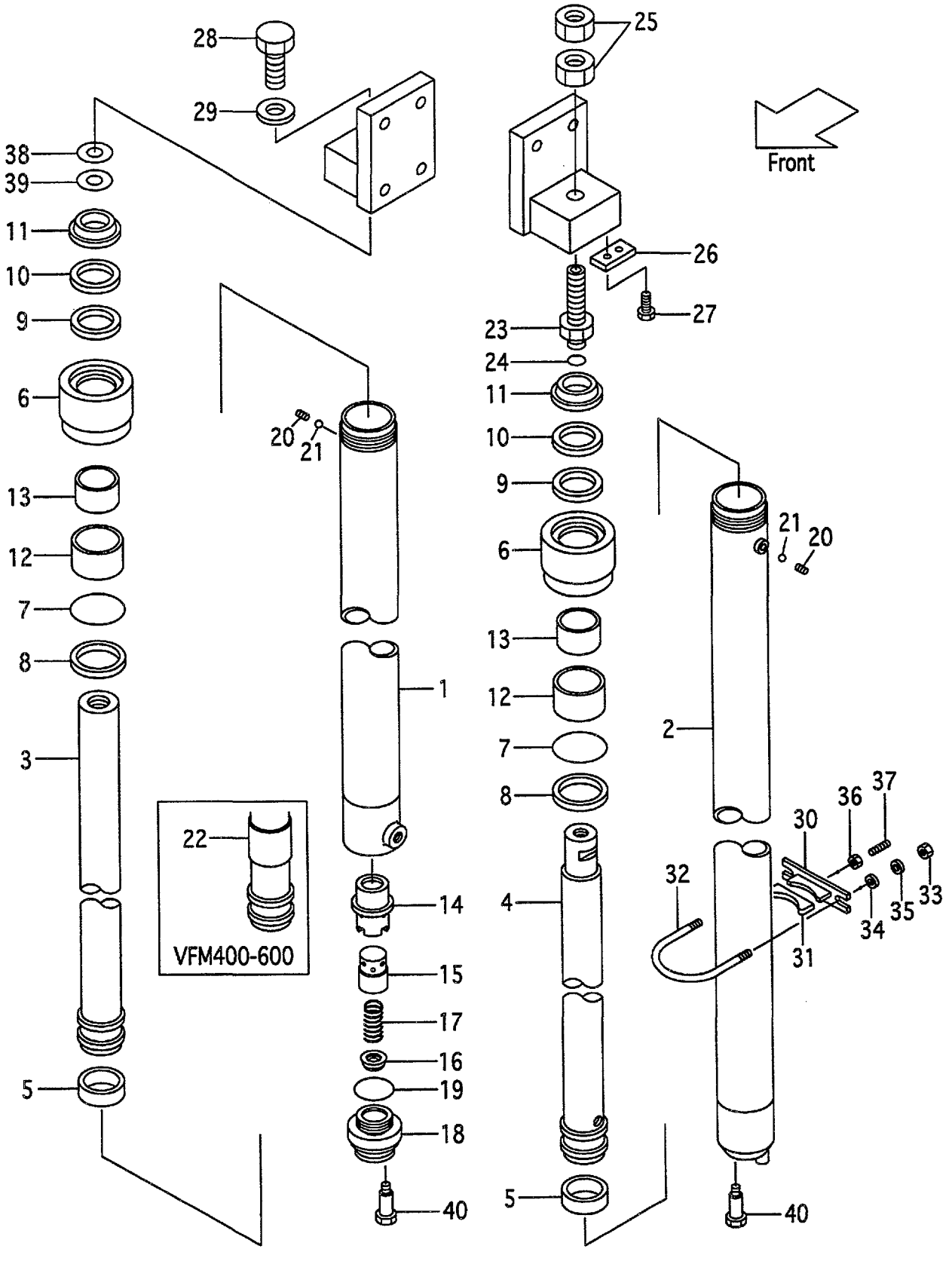

A:VFM18G(1.0t)
B:VFM18G(1.5t)
C:VFM18G(1.8t)

FIG.192
(M5010520)

Item No	Part No.	Mark	Description	Req'd	Remarks : Serial No.
K1	216G0-59801		KIT,OVERHAUL オーバ゛ホールキット	1	INC.5,7-11,19

FIG.193 MAST PIPING[VFM18G]

(M5010530) マストパイピング

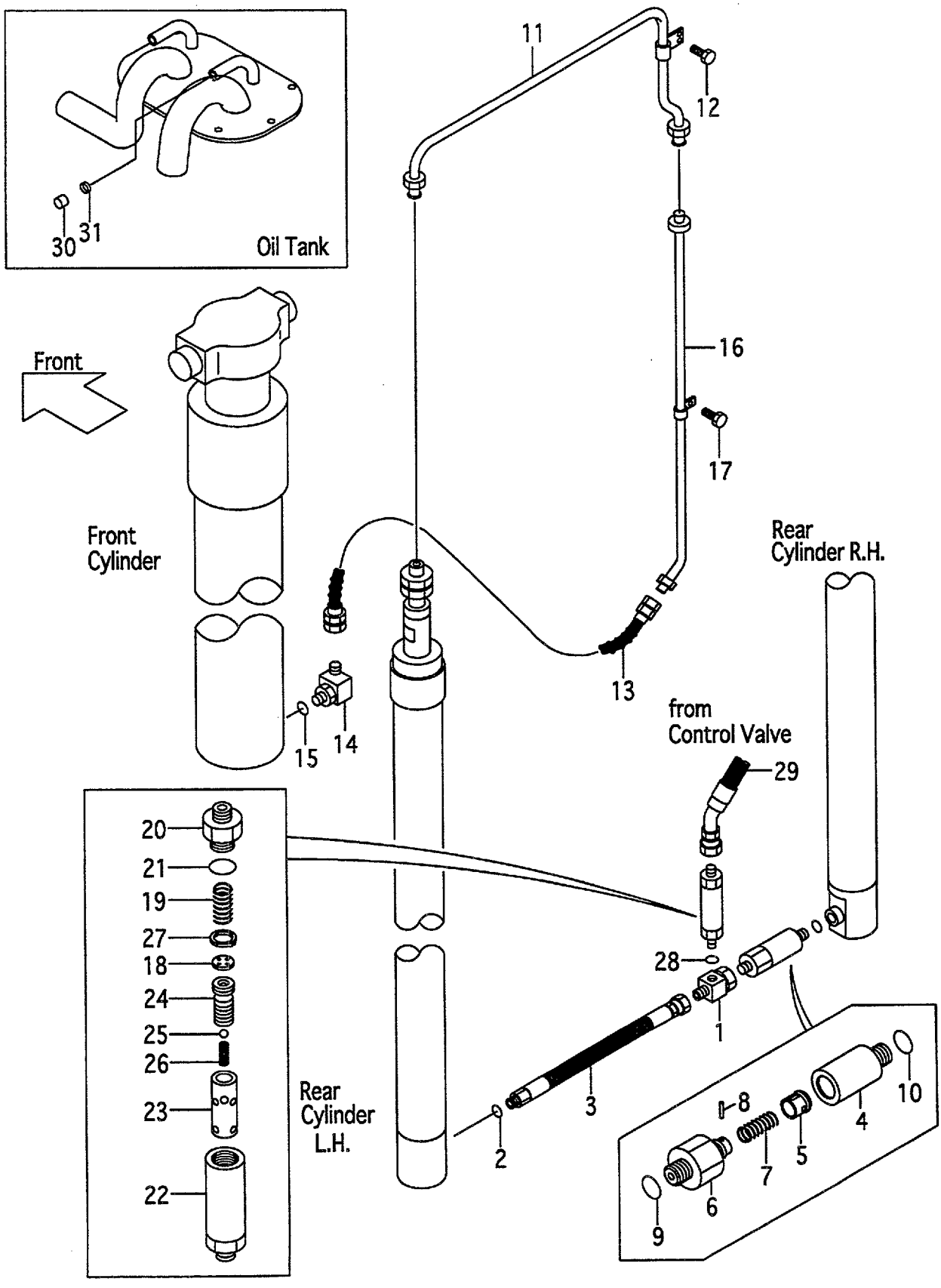

A:VFM18G(1.0t)
B:VFM18G(1.5t)
C:VFM18G(1.8t)

FIG.193
(M5010530)

Item No	Part No.	Mark	Description		Req'd	Remarks : Serial No.
1	234A0-62101		THREE-WAY	ｽﾘｰｳｪｲ	1	
2	03320-00140		O-RING	Oﾘﾝｸﾞ	1	
3	277H0-62101		HOSE	ﾎｰｽ	1	
A1	277H0-63001		VALVE-ASSY,CUT	ｶｯﾄﾊﾞﾙﾌﾞｱｯｾﾝ	1	INC.4-10
4	277H0-62111		ADAPTER	ｱﾀﾞﾌﾟﾀ	1	
A2	216G0-93201		VALVE-SUB-ASSY,CUT	ｶｯﾄﾊﾞﾙﾌﾞｻﾌﾞｱｯｾﾝ	1	INC.5-9
5	216G0-93212		PISTON	ﾋﾟｽﾄﾝ	1	
6	234A8-42622		NIPPLE	ﾆｯﾌﾟﾙ	1	
7	234A8-42611		SPRING	ｽﾌﾟﾘﾝｸﾞ	1	
8	02270-01014		PIN	ﾋﾟﾝ	1	
9	03320-00140		O-RING	Oﾘﾝｸﾞ	1	
10	03320-00140		O-RING	Oﾘﾝｸﾞ	1	
11	211F0-62301		PIPE	ﾊﾟｲﾌﾟ	1	
12	01183-06016		BOLT & WASHER	ﾎﾞﾙﾄ & ﾜｯｼｬ	2	
13	214A0-62151		HOSE	ﾎｰｽ	1	
A3	229F0-91001		ELBOW-ASSY	ｴﾙﾎﾞｱｯｾﾝ	1	INC.14,15
14	229F0-94001		ELBOW	ｴﾙﾎﾞ	1	
15	03320-00240		O-RING	Oﾘﾝｸﾞ	1	
16	210F0-60211		PIPE VFM200	ﾊﾟｲﾌﾟ	1	
-	210F0-60221		PIPE VFM225	ﾊﾟｲﾌﾟ	1	
-	210F0-60231		PIPE VFM250	ﾊﾟｲﾌﾟ	1	
-	210F0-60241		PIPE VFM270	ﾊﾟｲﾌﾟ	1	
-	210F0-60251		PIPE VFM275	ﾊﾟｲﾌﾟ	1	
-	210F0-60201		PIPE VFM300	ﾊﾟｲﾌﾟ	1	
-	210F0-60261		PIPE VFM325	ﾊﾟｲﾌﾟ	1	
-	210F0-60271		PIPE VFM330	ﾊﾟｲﾌﾟ	1	
-	210F0-60281		PIPE VFM350	ﾊﾟｲﾌﾟ	1	
-	210F0-60291		PIPE VFM366	ﾊﾟｲﾌﾟ	1	
-	210F0-60301		PIPE VFM370	ﾊﾟｲﾌﾟ	1	
-	210F0-60311		PIPE VFM375	ﾊﾟｲﾌﾟ	1	
-	210F0-60321		PIPE VFM400	ﾊﾟｲﾌﾟ	1	
-	210F0-60331		PIPE VFM425	ﾊﾟｲﾌﾟ	1	
-	210F0-60341		PIPE VFM450	ﾊﾟｲﾌﾟ	1	
-	210F0-60351		PIPE VFM475	ﾊﾟｲﾌﾟ	1	
-	210F0-60361		PIPE VFM500	ﾊﾟｲﾌﾟ	1	
-	210F0-60371		PIPE VFM550	ﾊﾟｲﾌﾟ	1	
-	210F0-60381		PIPE VFM600	ﾊﾟｲﾌﾟ	1	
17	01183-06016		BOLT & WASHER	ﾎﾞﾙﾄ & ﾜｯｼｬ	1	[VFM200-375]
-	01183-06016		BOLT & WASHER	ﾎﾞﾙﾄ & ﾜｯｼｬ	2	[VFM400-500]
-	01183-06016		BOLT & WASHER	ﾎﾞﾙﾄ & ﾜｯｼｬ	3	[VFM550-600]
A4	216G8-41001		REGULATOR-ASSY	ﾚｷﾞｭﾚｰﾀｱｯｾﾝ	1	INC.18-27
18	210F8-43031		PLATE	ﾌﾟﾚｰﾄ	1	
19	27979-43101		SPRING	ｽﾌﾟﾘﾝｸﾞ	1	
20	216G8-42121		NIPPLE	ﾆｯﾌﾟﾙ	1	
21	03300-00280		O-RING	Oﾘﾝｸﾞ	1	
22	214A8-43011		CASE	ｹｰｽ	1	
23	216G8-42111		SLEEVE	ｽﾘｰﾌﾞ	1	
24	24459-42921		PISTON	ﾋﾟｽﾄﾝ	1	
25	24459-42951		BALL,NYLON	ﾎﾞｰﾙ	1	
26	214A8-44151		SPRING	ｽﾌﾟﾘﾝｸﾞ	1	

FIG.193 MAST PIPING[VFM18G]

(M5010530) マストパイピング

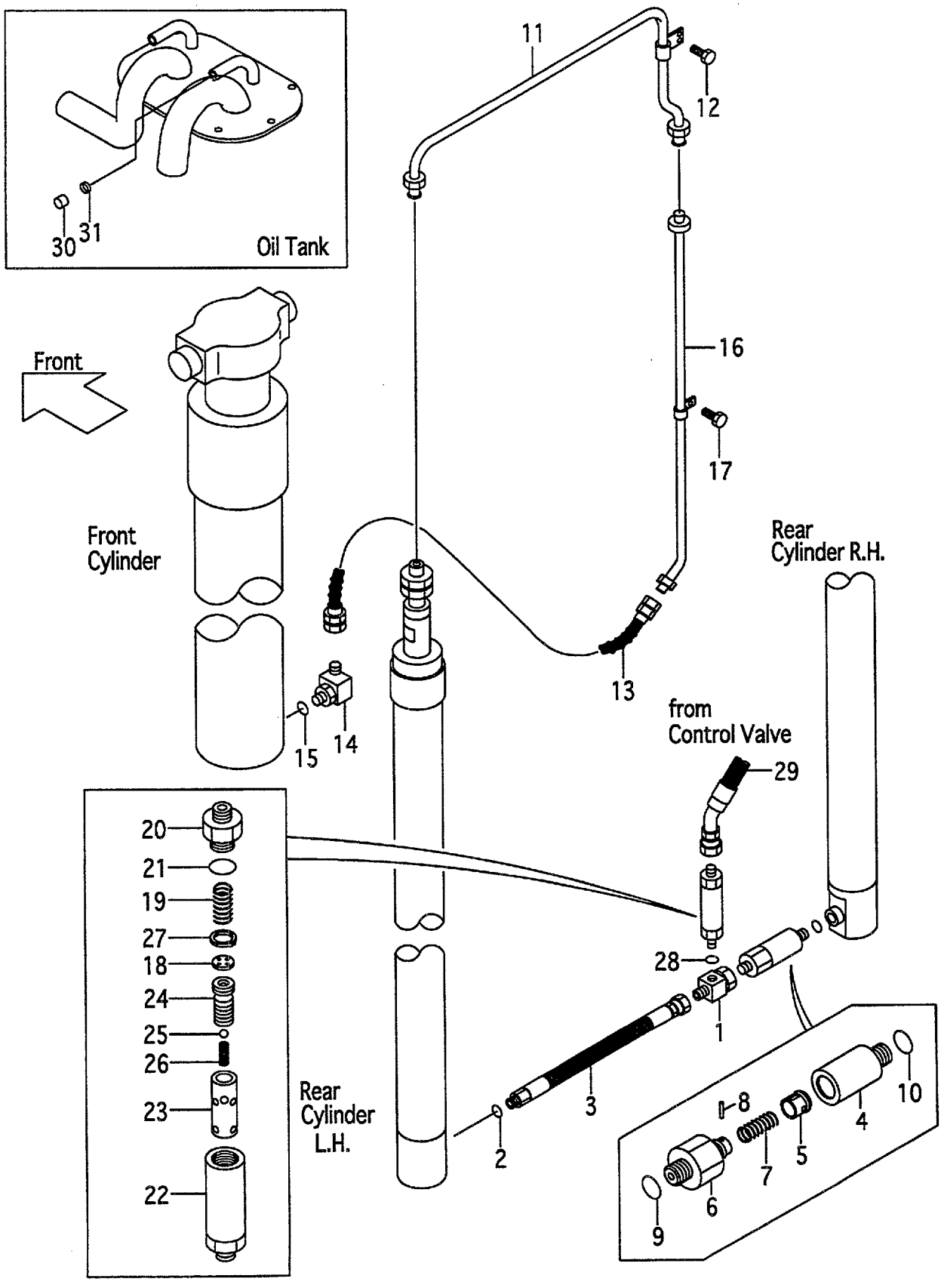

A:VFM18G(1.0t)
B:VFM18G(1.5t)
C:VFM18G(1.8t)

FIG.193
(M5010530)

Item No	Part No.	Mark	Description		Req'd	Remarks : Serial No.
27	02110-00018		RING,SNAP	ｽﾅｯﾌﾟﾘﾝｸﾞ	1	
28	03320-00180		O-RING	Oﾘﾝｸﾞ	1	
29	216G8-02502		HOSE	ﾎｰｽ	1	
30	55593-62551		CAP	ｷｬｯﾌﾟ	1	
31	04914-00019		CLIP	ｸﾘｯﾌﾟ	1	

FIG.194 LIFT BRACKET[VFM18G]

(M5010610) リフトブラケット

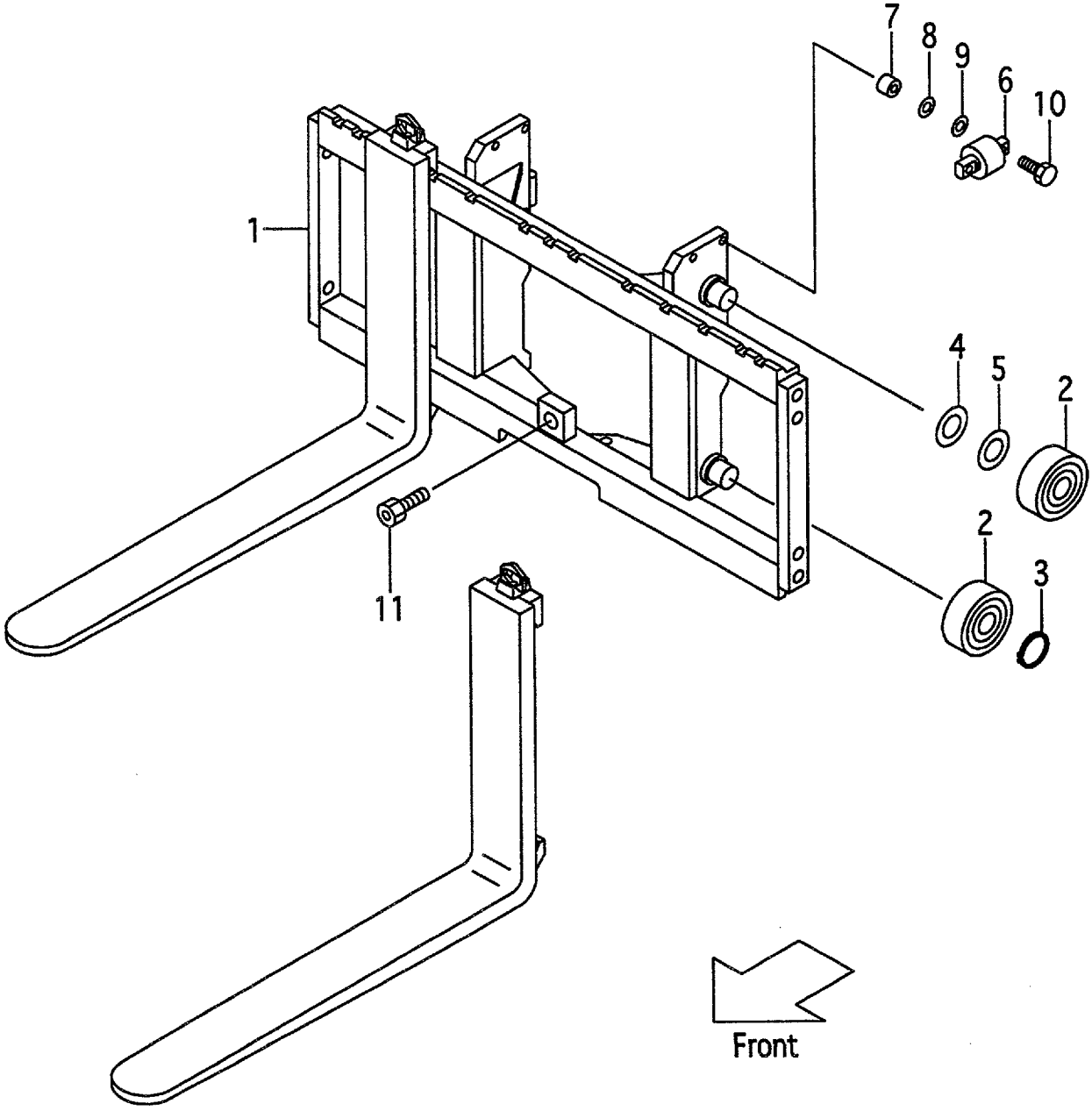

A:VFM18G(1.0t)
B:VFM18G(1.5t)
C:VFM18G(1.8t)

FIG.194
(M5010610)

Item No	Part No.	Mark	Description		Req'd	Remarks : Serial No.
1	218G0-60101		BRACKET,LIFT	ﾘﾌﾄﾌﾞﾗｹｯﾄ	1	
-	518G1-61301		BRACKET,LIFT	ﾘﾌﾄﾌﾞﾗｹｯﾄ	1	[WFX110][WFX114][WFX127] [WFX135][WFX138]
-	518G1-61401		BRACKET,LIFT	ﾘﾌﾄﾌﾞﾗｹｯﾄ	1	[WFX135][WFX138][WFX145] [WFX146][WFX154][WFX180]
2	211F8-22201		ROLLER,END,102.0	ﾛｰﾗ	4	
-	211F8-22211		ROLLER,END,102.5	ﾛｰﾗ	(4)	
-	511F3-74021		ROLLER,END,102.0	ﾛｰﾗ	4	[FC][CS35][FCS35][FCS55] [FCS45]
-	511F3-74031		ROLLER,END,102.5	ﾛｰﾗ	(4)	[FC][CS35][FCS35][FCS55] [FCS45]
3	02100-00035		RING,SNAP	ｽﾅｯﾌﾟﾘﾝｸﾞ	2	
4	211F8-22261		SHIM,T-0.5	ｼﾑ	4	
5	211F8-22271		SHIM,T-1.0	ｼﾑ	8	
6	22018-30304		ROLLER,SIDE	ﾛｰﾗ	2	
-	510F3-74001		ROLLER,SIDE	ﾛｰﾗ	2	[FC][CS35][FCS35][FCS55] [FCS45]
7	22578-32841		SPACER	ｽﾍﾟｰｻ	4	
8	22018-30261		SHIM	ｼﾑ	8	
9	22018-30121		SHIM	ｼﾑ	4	
10	01103-10050		BOLT & WASHER	ﾎﾞﾙﾄ & ﾜｯｼｬ	4	
11	01184-12025		BOLT & WASHER	ﾎﾞﾙﾄ & ﾜｯｼｬ	1	

FIG.195 FORK[VFM18G]

(M5018130) フォーク

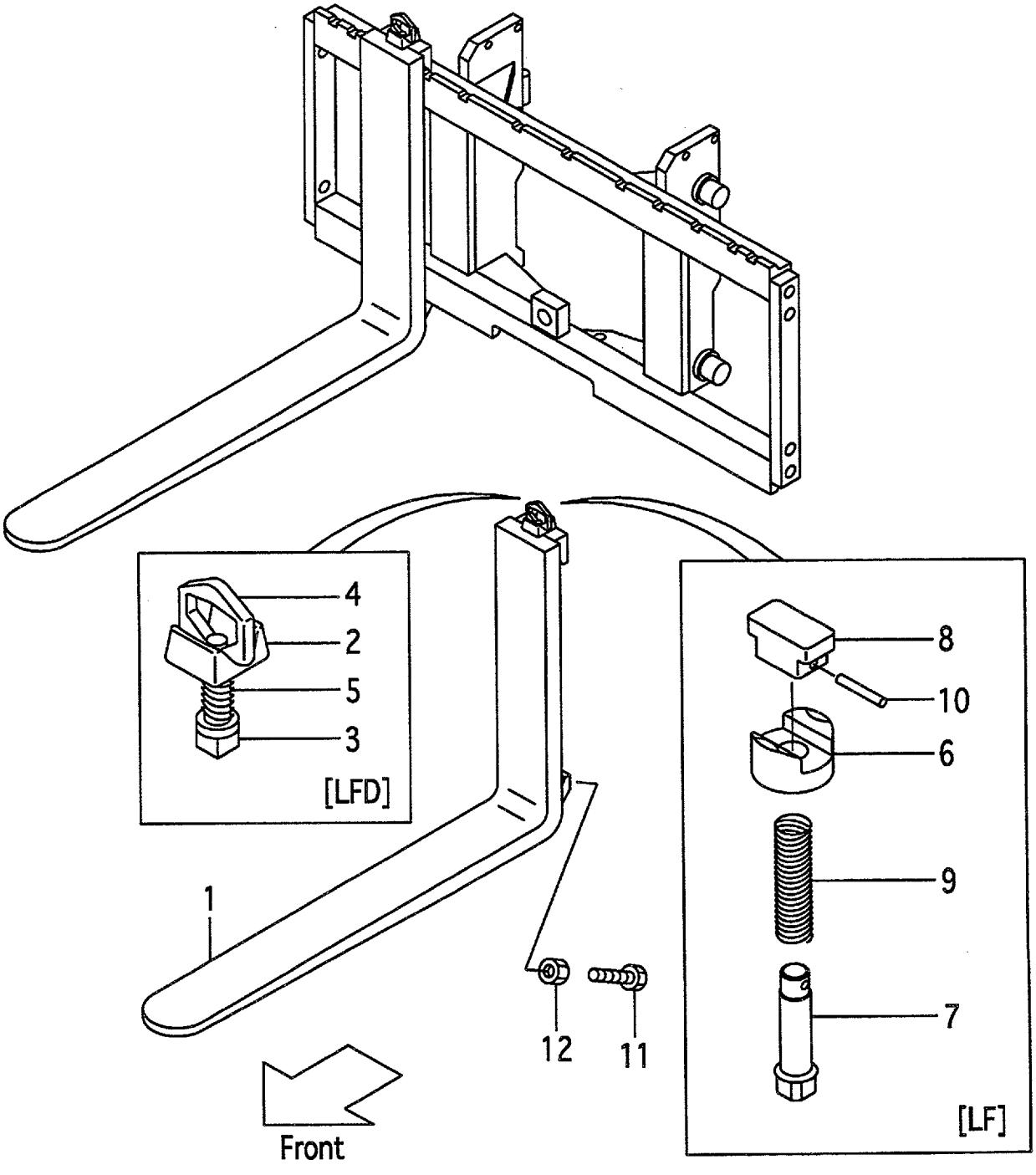

A:VFM18G(1.0t)
B:VFM18G(1.5t)
C:VFM18G(1.8t)

FIG.195
(M5018130)

Item No	Part No.	Mark	Description		Req'd	Remarks : Serial No.
1	210B8-10502		FORK	ﾌｫｰｸ	2	A (L=770) INC.6-10
-	210F8-10512		FORK	ﾌｫｰｸ	2	B,C (L=920) INC.6-10
-	210F8-10512		FORK	ﾌｫｰｸ	2	[EX](L=920) INC.6-10
-	210B8-10502		FORK	ﾌｫｰｸ	2	A [LF077] INC.6-10
-	210B8-10512		FORK	ﾌｫｰｸ	2	A [LF085] INC.6-10
-	210F8-10502		FORK	ﾌｫｰｸ	2	B,C [LF085] INC.6-10
-	210F8-10572		FORK	ﾌｫｰｸ	2	[LF090] INC.6-10
-	210B8-10522		FORK	ﾌｫｰｸ	2	A [LF092] INC.6-10
-	210F8-10512		FORK	ﾌｫｰｸ	2	B,C [LF092] INC.6-10
-	210F8-10582		FORK	ﾌｫｰｸ	2	[LF100] INC.6-10
-	210F8-10522		FORK	ﾌｫｰｸ	2	[LF107] INC.6-10
-	210F8-10592		FORK	ﾌｫｰｸ	2	[LF110] INC.6-10
-	210F8-10602		FORK	ﾌｫｰｸ	2	[LF120] INC.6-10
-	210F8-10532		FORK	ﾌｫｰｸ	2	[LF122] INC.6-10
-	210F8-10612		FORK	ﾌｫｰｸ	2	[LF130] INC.6-10
-	210H8-10532		FORK	ﾌｫｰｸ	2	[LF137] INC.6-10
-	210H8-10622		FORK	ﾌｫｰｸ	2	[LF140] INC.6-10
-	210H8-10632		FORK	ﾌｫｰｸ	2	[LF150] INC.6-10
-	210H8-10542		FORK	ﾌｫｰｸ	2	[LF152] INC.6-10
-	210H8-10642		FORK	ﾌｫｰｸ	2	[LF160] INC.6-10
-	210H8-10552		FORK	ﾌｫｰｸ	2	B,C [LF167] INC.6-10
-	216B8-10301		FORK	ﾌｫｰｸ	2	A [LFD077] INC.2-5
-	216B8-10311		FORK	ﾌｫｰｸ	2	A [LFD085] INC.2-5
-	216G8-10301		FORK	ﾌｫｰｸ	2	B [LFD085] INC.2-5
-	216K8-10361		FORK	ﾌｫｰｸ	2	C [LFD085] INC.2-5
-	216G8-10371		FORK	ﾌｫｰｸ	2	A,B [LFD090] INC.2-5
-	216K8-10371		FORK	ﾌｫｰｸ	2	C [LFD090] INC.2-5
-	216B8-10321		FORK	ﾌｫｰｸ	2	A [LFD092] INC.2-5
-	216G8-10311		FORK	ﾌｫｰｸ	2	B [LFD092] INC.2-5
-	216K8-10301		FORK	ﾌｫｰｸ	2	C [LFD092] INC.2-5
-	216G8-10381		FORK	ﾌｫｰｸ	2	A,B [LFD100] INC.2-5

FIG.195 FORK[VFM18G]

(M5018130) フォーク

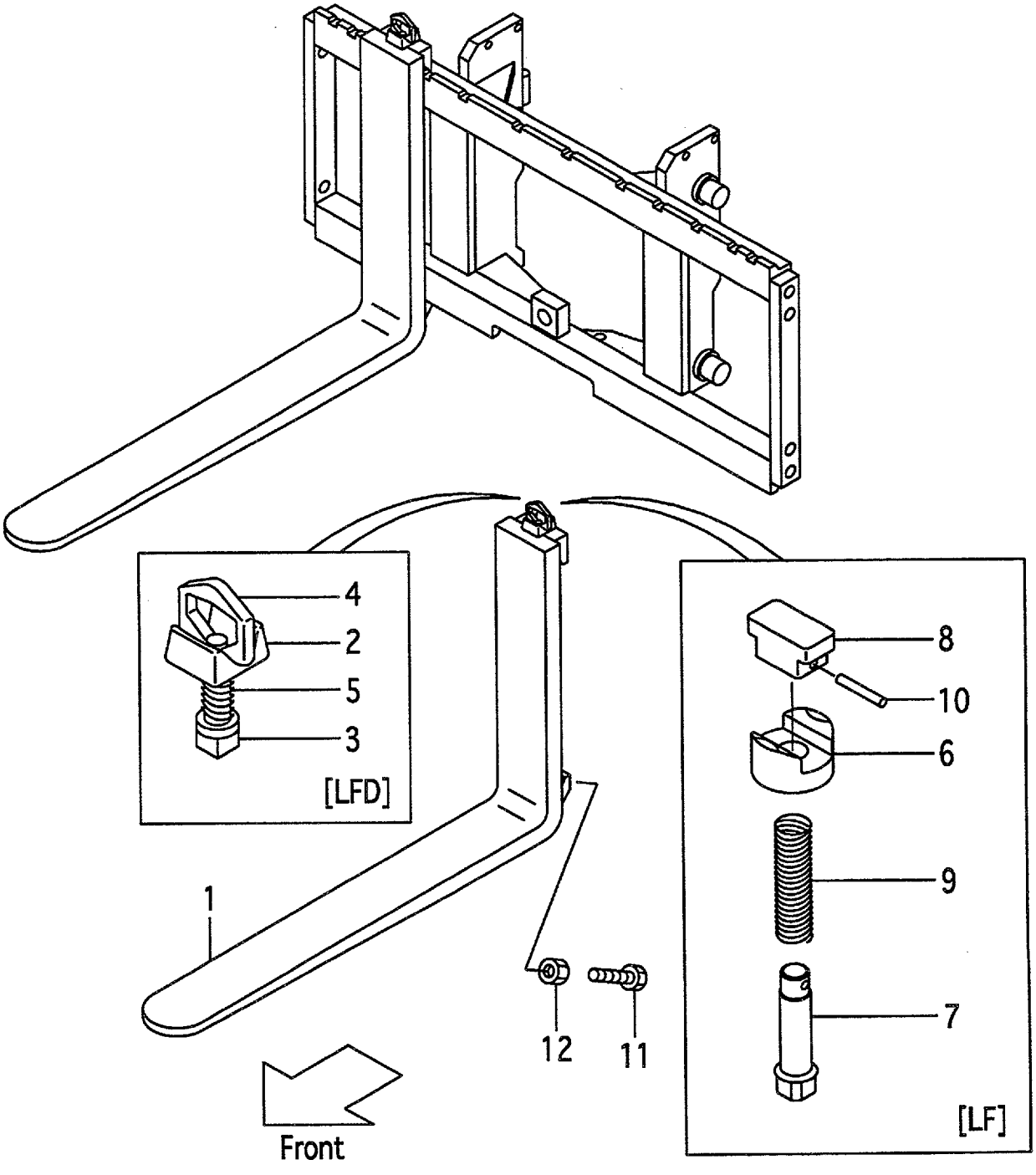

A:VFM18G(1.0t)
B:VFM18G(1.5t)
C:VFM18G(1.8t)

FIG.195
(M5018130)

Item No	Part No.	Mark	Description		Req'd	Remarks : Serial No.
-	216K8-10381		FORK	ﾌｫｰｸ	2	C [LFD100] INC.2-5
-	216G8-10321		FORK	ﾌｫｰｸ	2	A,B [LFD107] INC.2-5
-	216K8-10311		FORK	ﾌｫｰｸ	2	C [LFD107] INC.2-5
-	216G8-10391		FORK	ﾌｫｰｸ	2	A,B [LFD110] INC.2-5
-	216K8-10391		FORK	ﾌｫｰｸ	2	C [LFD110] INC.2-5
-	216G8-10401		FORK	ﾌｫｰｸ	2	A,B [LFD120] INC.2-5
-	216K8-10401		FORK	ﾌｫｰｸ	2	C [LFD120] INC.2-5
-	216G8-10331		FORK	ﾌｫｰｸ	2	A,B [LFD122] INC.2-5
-	216K8-10321		FORK	ﾌｫｰｸ	2	C [LFD122] INC.2-5
-	216G8-10411		FORK	ﾌｫｰｸ	2	A,B [LFD130] INC.2-5
-	216K8-10411		FORK	ﾌｫｰｸ	2	C [LFD130] INC.2-5
-	216G8-10341		FORK	ﾌｫｰｸ	2	A,B [LFD137] INC.2-5
-	216K8-10331		FORK	ﾌｫｰｸ	2	C [LFD137] INC.2-5
-	216G8-10421		FORK	ﾌｫｰｸ	2	A,B [LFD140] INC.2-5
-	216K8-10421		FORK	ﾌｫｰｸ	2	C [LFD140] INC.2-5
-	216G8-10431		FORK	ﾌｫｰｸ	2	A,B [LFD150] INC.2-5
-	216K8-10431		FORK	ﾌｫｰｸ	2	C [LFD150] INC.2-5
-	216G8-10351		FORK	ﾌｫｰｸ	2	A,B [LFD152] INC.2-5
-	216K8-10341		FORK	ﾌｫｰｸ	2	C [LFD152] INC.2-5
-	216G8-10441		FORK	ﾌｫｰｸ	2	A,B [LFD160] INC.2-5
-	216K8-10441		FORK	ﾌｫｰｸ	2	C [LFD160] INC.2-5
-	216G8-10361		FORK	ﾌｫｰｸ	2	B [LFD167] INC.2-5
-	216K8-10351		FORK	ﾌｫｰｸ	2	C [LFD167] INC.2-5
A1	214A8-11001		STOPPER-ASSY	ｽﾄｯﾊﾟｱｯｾﾝ	2	[LFD] INC.2-5
2	214A8-12001		HEAD	ﾍｯﾄﾞ	2	[LFD]
3	214A8-12011		STOPPER	ｽﾄｯﾊﾟ	2	[LFD]
4	214A8-12021		HANDLE	ﾊﾝﾄﾞﾙ	2	[LFD]

FIG.195 FORK[VFM18G]

(M5018130) フォーク

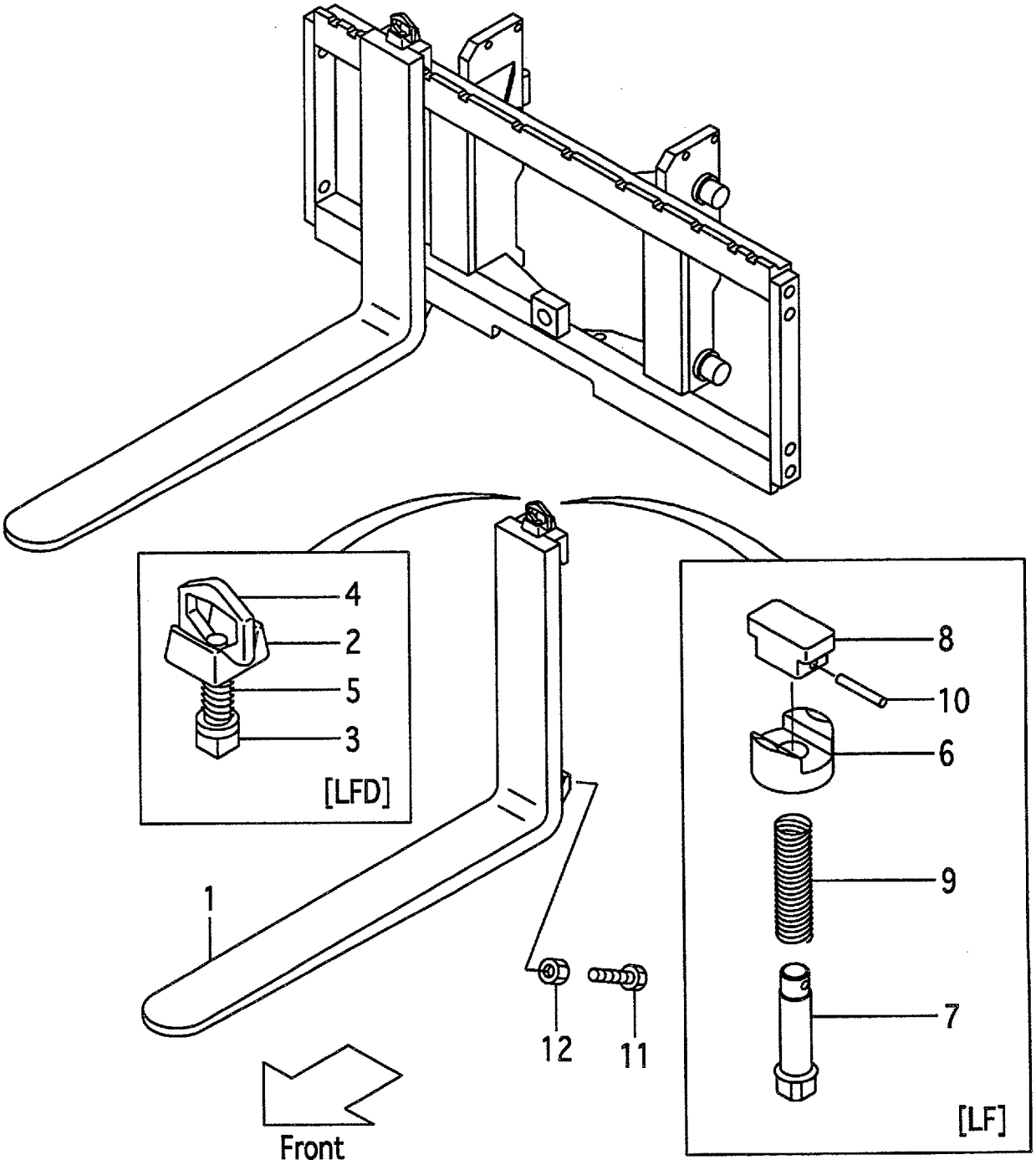

A:VFM18G(1.0t)
B:VFM18G(1.5t)
C:VFM18G(1.8t)

FIG.195
(M5018130)

Item No	Part No.	Mark	Description		Req'd	Remarks : Serial No.
5	214A8-12031		SPRING	ｽﾌﾟﾘﾝｸﾞ	2	[LFD]
6	216G8-12921		HOLDER	ﾎﾙﾀﾞ	2	[LF]
7	231A8-12001		PIN	ﾋﾟﾝ	2	[LF]
8	231A8-12011		KNOB	ﾉﾌﾞ	2	[LF]
9	231A8-12021		SPRING	ｽﾌﾟﾘﾝｸﾞ	2	[LF]
10	231A8-12031		PIN,SPRING	ﾋﾟﾝ	2	[LF]
11	216G8-12101		BOLT	ﾎﾞﾙﾄ	4	[LFD]
12	01402-00010		NUT	ﾅｯﾄ	4	[LFD]

FIG.196 BACKREST[VFM18G]

(M5018250) ﾊﾞｯｸﾚｽﾄ

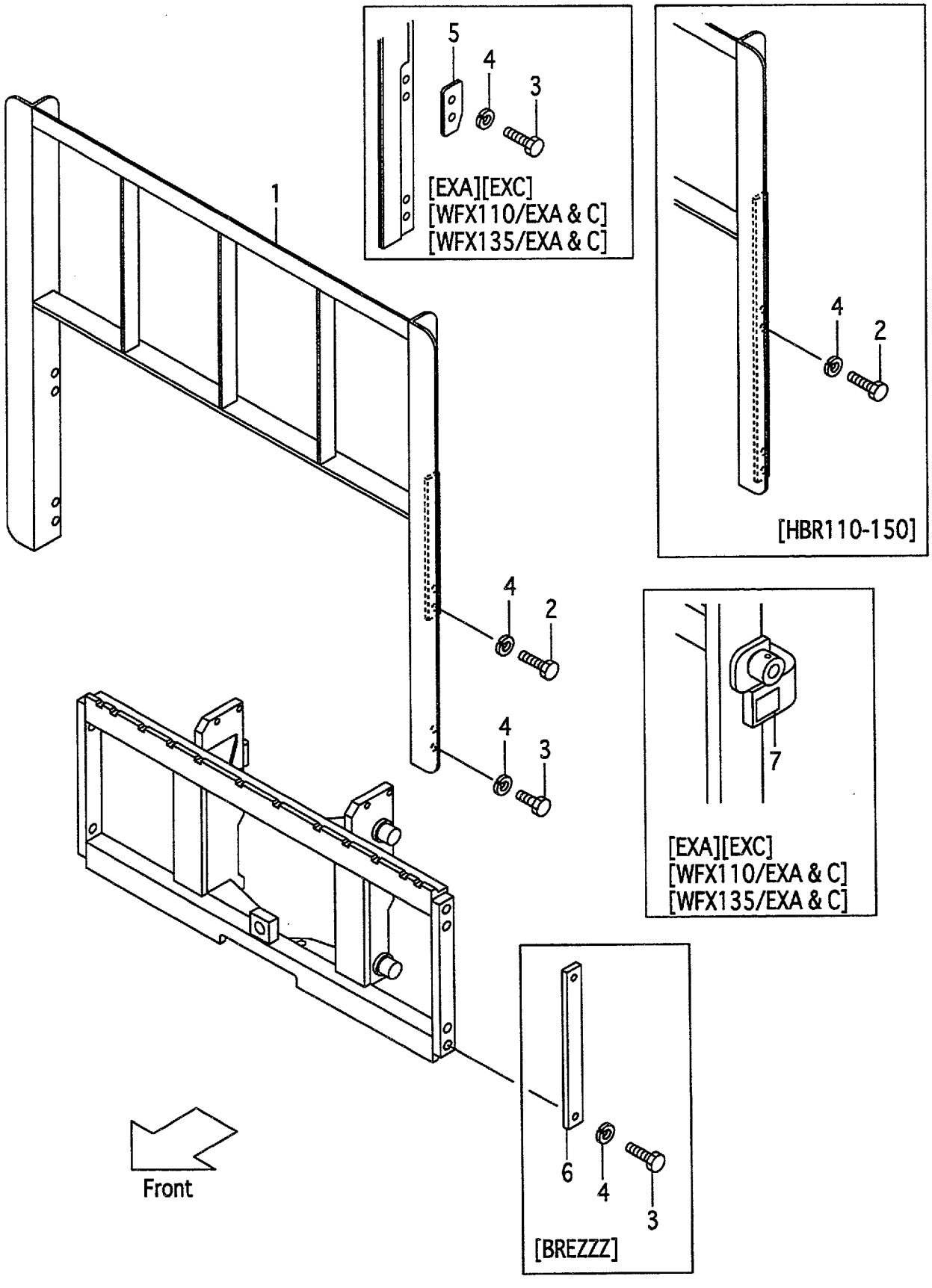

A:VFM18G(1.0t)
B:VFM18G(1.5t)
C:VFM18G(1.8t)

FIG.196
(M5018250)

Item No	Part No.	Mark	Description		Req'd	Remarks : Serial No.
1	216G8-22201		BACKREST	ﾊﾞｯｸﾚｽﾄ	1	
-	516G2-74301		BACKREST	ﾊﾞｯｸﾚｽﾄ	1	[EXA][EXC][HBR048]
-	216G8-22301		BACKREST	ﾊﾞｯｸﾚｽﾄ	1	[HBR110]
-	216G8-22311		BACKREST	ﾊﾞｯｸﾚｽﾄ	1	[HBR120]
-	216G8-22321		BACKREST	ﾊﾞｯｸﾚｽﾄ	1	[HBR130]
-	216G8-22331		BACKREST	ﾊﾞｯｸﾚｽﾄ	1	[HBR140]
-	216G8-22341		BACKREST	ﾊﾞｯｸﾚｽﾄ	1	[HBR150]
-	516G1-64301		BACKREST	ﾊﾞｯｸﾚｽﾄ	1	[WFX110]
-	516G1-64351		BACKREST	ﾊﾞｯｸﾚｽﾄ	1	[WFX135]
-	516G2-74101		BACKREST	ﾊﾞｯｸﾚｽﾄ	1	[WFX110/EXA][WFX110/EXC]
-	516G2-74201		BACKREST	ﾊﾞｯｸﾚｽﾄ	1	[WFX135/EXA][WFX135/EXC]
2	01100-14030		BOLT	ﾎﾞﾙﾄ	4	(WITHOUT BREZZZ)
-	01100-14035		BOLT	ﾎﾞﾙﾄ	4	[EXA][EXC][HBR048] [WFX110/EXA&C] [WFX135/EXA&C]
-	01100-14030		BOLT	ﾎﾞﾙﾄ	8	[HBR110-150]
3	01100-14025		BOLT	ﾎﾞﾙﾄ	4	(WITHOUT HBR110-150)
4	02010-00014		WASHER	ﾜｯｼｬ	8	
-	02010-00014		WASHER	ﾜｯｼｬ	4	[BREZZZ]
5	534A2-74051		PLATE,STOPPER	ﾌﾟﾚｰﾄ	2	[EXA][EXC][HBR048] [WFX110/EXA&C] [WFX135/EXA&C]
6	23659-42161		PLATE	ﾌﾟﾚｰﾄ	2	[BREZZZ]
7	534A2-74301		DECAL,CAUTION	ﾃﾞｶﾙ	1	[EXA][EXC][HBR048] [WFX110/EXA&C] [WFX135/EXA&C]

FIG.197 MAST[VFHM18G]

(M5010710) マスト

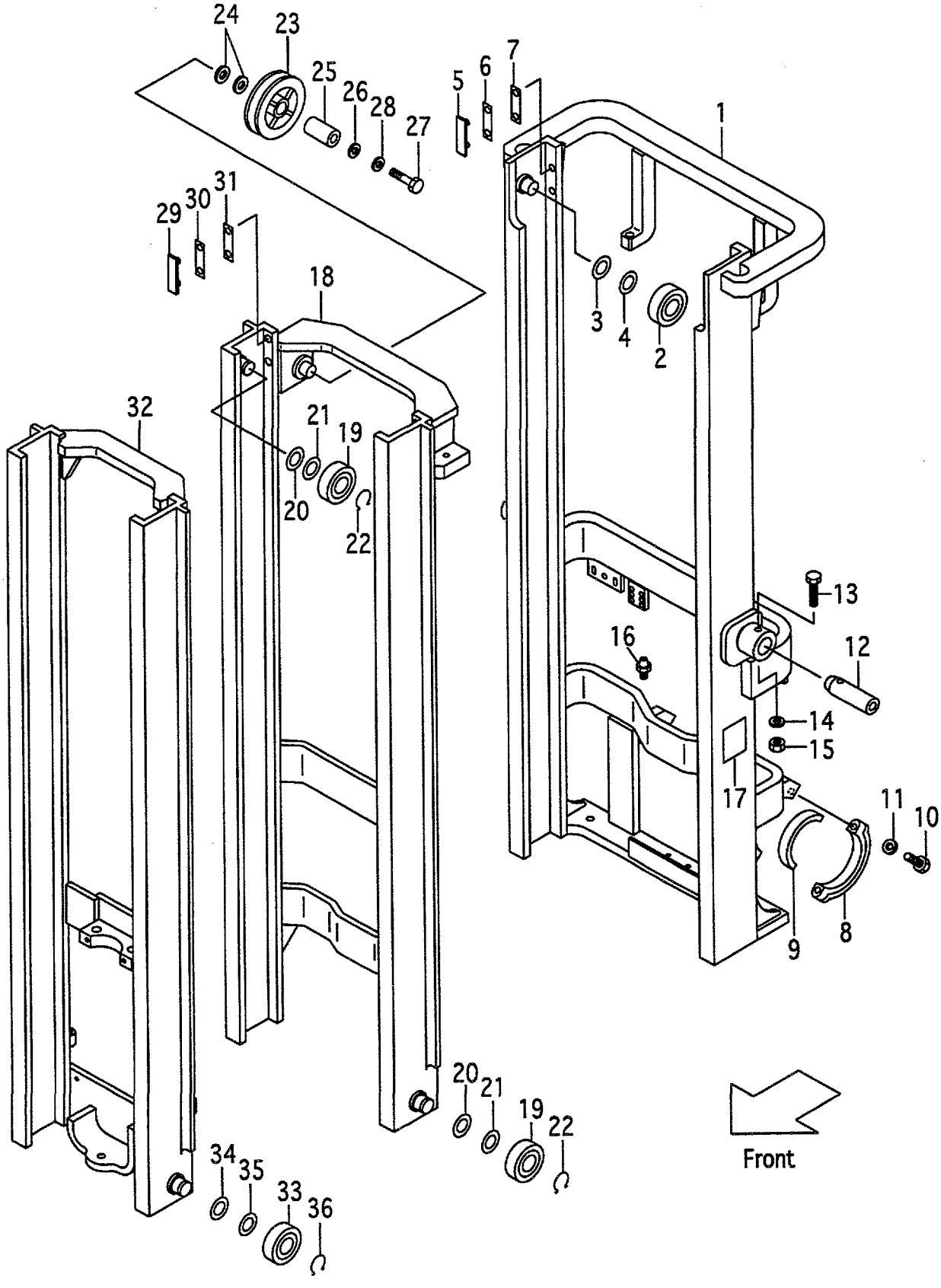

A:VFHM18G(1.0t)
B:VFHM18G(1.5t)
C:VFHM18G(1.8t)

FIG.197
(M5010710)

Item No	Part No.	Mark	Description	Req'd	Remarks : Serial No.
1	218G0-70111		MAST,OUTER VFHM360 アウタマスト	1	
-	218G0-70121		MAST,OUTER VFHM400 アウタマスト	1	
-	218G0-70101		MAST,OUTER VFHM435 アウタマスト	1	
-	218G0-70131		MAST,OUTER VFHM480 アウタマスト	1	
-	218G0-70141		MAST,OUTER VFHM500 アウタマスト	1	
-	218G0-70151		MAST,OUTER VFHM540 アウタマスト	1	
-	218G0-70161		MAST,OUTER VFHM550 アウタマスト	1	
-	218G0-70171		MAST,OUTER VFHM600 アウタマスト	1	
-	218G0-70181		MAST,OUTER VFHM650 アウタマスト	1	
-	218G0-70191		MAST,OUTER VFHM700 アウタマスト	1	
-	218G0-70201		MAST,OUTER VFHM750 アウタマスト	1	
-	518G3-91411		MAST,OUTER VFHM360 アウタマスト	1	[EXR][RW][HC]
-	518G3-91421		MAST,OUTER VFHM400 アウタマスト	1	[EXR][RW][HC]
-	518G3-91401		MAST,OUTER VFHM435 アウタマスト	1	[EXR][RW][HC]
-	518G3-91431		MAST,OUTER VFHM480 アウタマスト	1	[EXR][RW][HC]
-	518G3-91441		MAST,OUTER VFHM500 アウタマスト	1	[EXR][RW][HC]
-	518G3-91451		MAST,OUTER VFHM540 アウタマスト	1	[EXR][RW][HC]
-	518G3-91461		MAST,OUTER VFHM550 アウタマスト	1	[EXR][RW][HC]
-	518G3-91471		MAST,OUTER VFHM600 アウタマスト	1	[EXR][RW][HC]
-	518G3-91481		MAST,OUTER VFHM650 アウタマスト	1	[EXR][RW][HC]
-	518G3-91491		MAST,OUTER VFHM700 アウタマスト	1	[EXR][RW][HC]
-	518G3-91501		MAST,OUTER VFHM750 アウタマスト	1	[EXR][RW][HC]
2	211F8-22221		ROLLER,END,102.0 ローラ	2	
-	211F8-22231		ROLLER,END,102.5 ローラ	(2)	
-	511F3-74021		ROLLER,END,102.0 ローラ	2	[FC][CS35][FCS35][FCS55] [FCS45]
-	511F3-74031		ROLLER,END,102.5 ローラ	(2)	[FC][CS35][FCS35][FCS55] [FCS45]
3	211F8-22261		SHIM,T-0.5 シム	4	
4	211F8-22271		SHIM,T-1.0 シム	8	
5	216G8-33401		SLIPPER スリッパ	2	
6	216G8-33361		SHIM,T-0.5 シム	8	
7	216G8-33371		SHIM,T-1.0 シム	4	
8	210F6-12441		CAP キャップ	2	
9	216G8-02001		BUSHING ブッシング	2	
10	01100-14065		BOLT ボルト	4	
11	02010-00014		WASHER ワッシャ	4	
12	210F8-02102		PIN ピン	2	
13	216G8-52321		BOLT ボルト	2	
14	02010-20012		WASHER ワッシャ	2	
15	234A8-42571		NUT ナット	2	
16	04901-00100		FITTING フィッティング	2	
17	23678-06002		PLATE,NAME プレート	1	
18	211F0-70312		MAST,MIDDLE VFHM360 ミドルマスト	1	
-	211F0-70322		MAST,MIDDLE VFHM400 ミドルマスト	1	
-	211F0-70302		MAST,MIDDLE VFHM435 ミドルマスト	1	
-	211F0-70332		MAST,MIDDLE VFHM480 ミドルマスト	1	
-	211F0-70342		MAST,MIDDLE VFHM500 ミドルマスト	1	
-	211F0-70352		MAST,MIDDLE VFHM540 ミドルマスト	1	
-	211F0-70362		MAST,MIDDLE VFHM550 ミドルマスト	1	

FIG.197 MAST[VFHM18G]

(M5010710) マスト

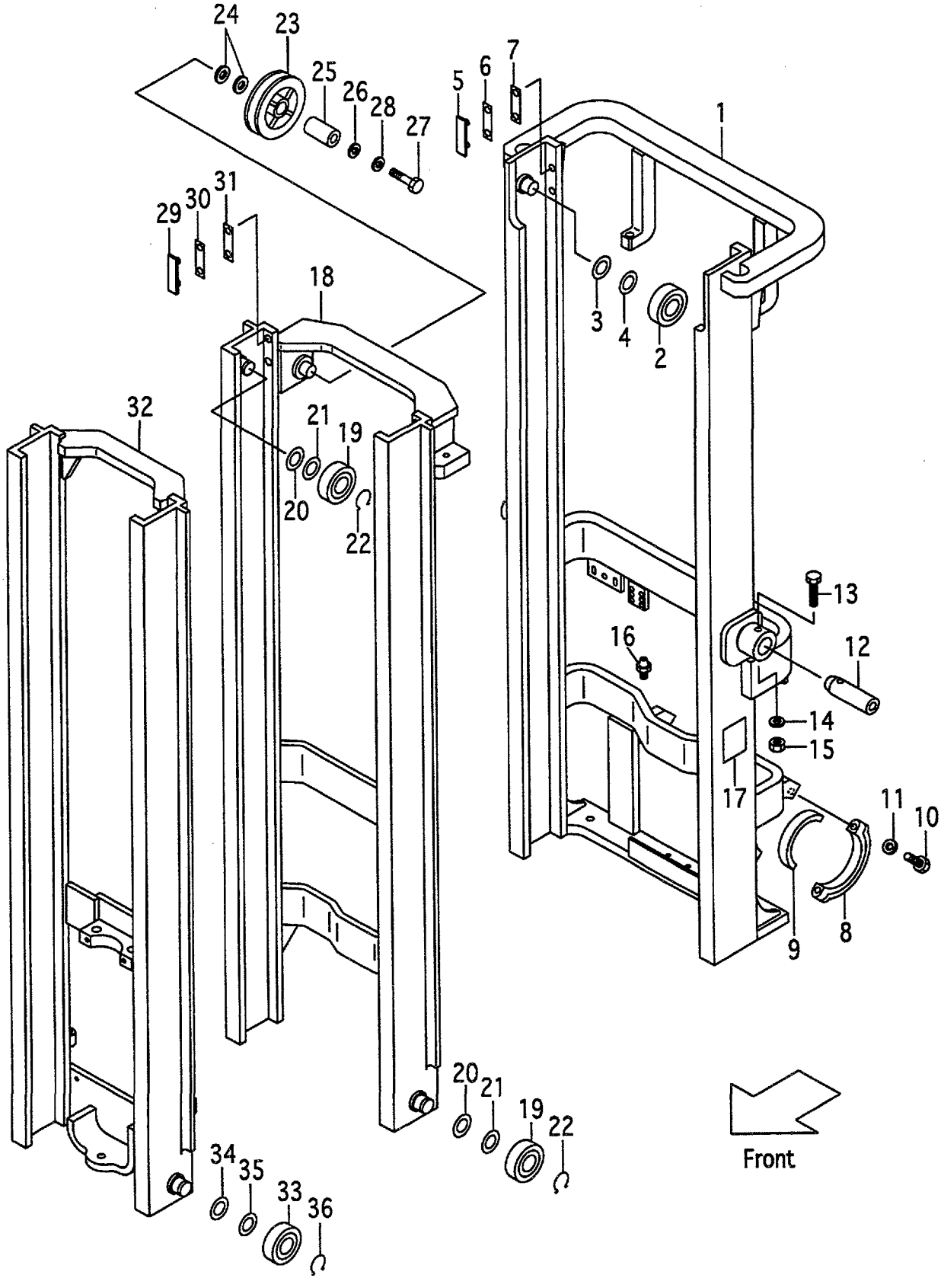

A:VFHM18G(1.0t)
B:VFHM18G(1.5t)
C:VFHM18G(1.8t)

FIG.197
(M5010710)

Item No	Part No.	Mark	Description		Req'd	Remarks : Serial No.
-	211F0-70372		MAST,MIDDLE VFHM600	ﾐﾄﾞﾙﾏｽﾄ	1	
-	211F0-70382		MAST,MIDDLE VFHM650	ﾐﾄﾞﾙﾏｽﾄ	1	
-	211F0-70392		MAST,MIDDLE VFHM700	ﾐﾄﾞﾙﾏｽﾄ	1	
-	211F0-70402		MAST,MIDDLE VFHM750	ﾐﾄﾞﾙﾏｽﾄ	1	
19	211F8-22221		ROLLER,END,102.0	ﾛｰﾗ	4	
-	211F8-22231		ROLLER,END,102.5	ﾛｰﾗ	(4)	
-	511F3-74021		ROLLER,END,102.0	ﾛｰﾗ	4	[FC][CS35][FCS35][FCS55] [FCS45]
-	511F3-74031		ROLLER,END,102.5	ﾛｰﾗ	(4)	[FC][CS35][FCS35][FCS55] [FCS45]
20	211F8-22261		SHIM,T-0.5	ｼﾑ	8	
21	211F8-22271		SHIM,T-1.0	ｼﾑ	16	
22	09192-30035		RING,SNAP	ｽﾅｯﾌﾟﾘﾝｸﾞ	4	
23	63130-15301		PULLEY	ﾌﾟｰﾘ	1	
24	62050-12331		SPACER	ｽﾍﾟｰｻ	2	
25	214A0-72701		COLLAR	ｶﾗｰ	1	
26	02000-00016		WASHER	ﾜｯｼｬ	1	
27	01100-16060		BOLT	ﾎﾞﾙﾄ	1	
28	02010-00016		WASHER	ﾜｯｼｬ	1	
29	216G8-33351		SLIPPER	ｽﾘｯﾊﾟ	2	
30	216G8-33361		SHIM,T-0.5	ｼﾑ	16	
31	216G8-33371		SHIM,T-1.0	ｼﾑ	8	
32	218G0-70511		MAST,INNER VFHM360	ｲﾝﾅﾏｽﾄ	1	
-	218G0-70521		MAST,INNER VFHM400	ｲﾝﾅﾏｽﾄ	1	
-	218G0-70501		MAST,INNER VFHM435	ｲﾝﾅﾏｽﾄ	1	
-	218G0-70531		MAST,INNER VFHM480	ｲﾝﾅﾏｽﾄ	1	
-	218G0-70541		MAST,INNER VFHM500	ｲﾝﾅﾏｽﾄ	1	
-	218G0-70551		MAST,INNER VFHM540	ｲﾝﾅﾏｽﾄ	1	
-	218G0-70561		MAST,INNER VFHM550	ｲﾝﾅﾏｽﾄ	1	
-	218G0-70571		MAST,INNER VFHM600	ｲﾝﾅﾏｽﾄ	1	
-	218G0-70581		MAST,INNER VFHM650	ｲﾝﾅﾏｽﾄ	1	
-	218G0-70591		MAST,INNER VFHM700	ｲﾝﾅﾏｽﾄ	1	
-	218G0-70601		MAST,INNER VFHM750	ｲﾝﾅﾏｽﾄ	1	
33	211F8-22221		ROLLER,END,102.0	ﾛｰﾗ	2	
-	211F8-22231		ROLLER,END,102.5	ﾛｰﾗ	(2)	
-	511F3-74021		ROLLER,END,102.0	ﾛｰﾗ	2	[FC][CS35][FCS35][FCS55] [FCS45]
-	511F3-74031		ROLLER,END,102.5	ﾛｰﾗ	(2)	[FC][CS35][FCS35][FCS55] [FCS45]
34	211F8-22261		SHIM,T-0.5	ｼﾑ	4	
35	211F8-22271		SHIM,T-1.0	ｼﾑ	8	
36	09192-30035		RING,SNAP	ｽﾅｯﾌﾟﾘﾝｸﾞ	2	

FIG.198 TILT GAUGE[TG/VFHM18G]

(M5010720) ﾃｨﾙﾄｹﾞｰｼﾞ

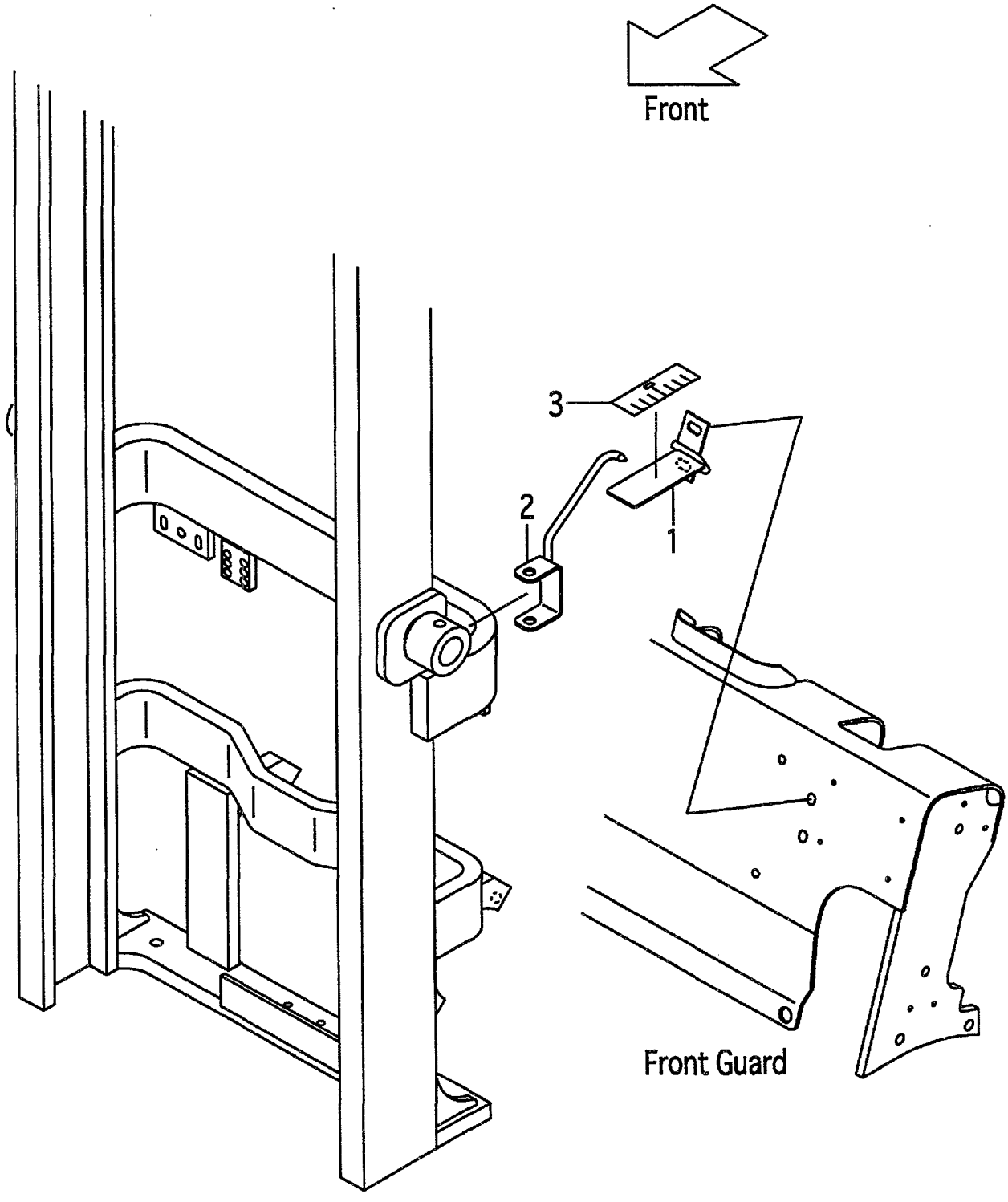

A:VFHM18G(1.0t)
B:VFHM18G(1.5t)
C:VFHM18G(1.8t)

FIG.198
(M5010720)

Item No	Part No.	Mark	Description		Req'd	Remarks : Serial No.
1	639A0-10011		GAUGE	ｹﾞｰｼﾞ	1	[TG][PPC][PR]
2	618G0-10051		INDICATER	ｲﾝｼﾞｹｰﾀ	1	[TG][PPC][PR]
3	62459-23371		SEAL,DUST	ｼｰﾙ	1	[TG][PPC][PR]

FIG.199 LIFT CYLINDER(FRONT)[VFHM18G]

(M5010810) ﾘﾌﾄｼﾘﾝﾀﾞ(ﾌﾛﾝﾄ)

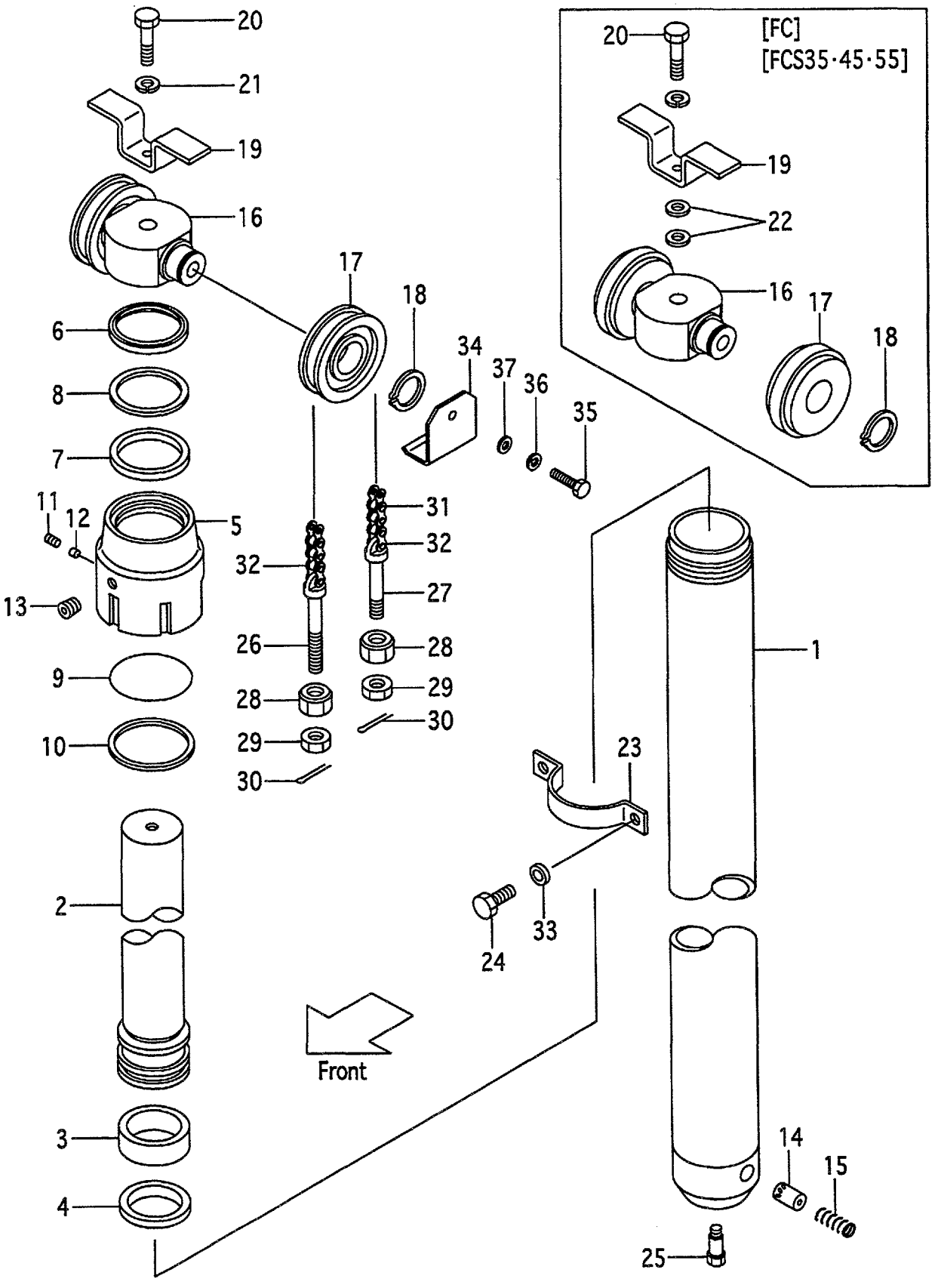

A:VFHM18G(1.0t)
B:VFHM18G(1.5t)
C:VFHM18G(1.8t)

FIG.199
(M5010810)

Item No	Part No.	Mark	Description	Req'd	Remarks : Serial No.
A1	211F0-50131		CYL-ASSY,LIFT VFHM360 ﾘﾌﾄｼﾘﾝﾀﾞｱｯｾﾝ	1	INC.1-15
-	211F0-50151		CYL-ASSY,LIFT VFHM400 ﾘﾌﾄｼﾘﾝﾀﾞｱｯｾﾝ	1	INC.1-15
-	211F0-50101		CYL-ASSY,LIFT VFHM435 ﾘﾌﾄｼﾘﾝﾀﾞｱｯｾﾝ	1	INC.1-15
-	211F0-50171		CYL-ASSY,LIFT VFHM480 ﾘﾌﾄｼﾘﾝﾀﾞｱｯｾﾝ	1	INC.1-15
-	211F0-50181		CYL-ASSY,LIFT VFHM500 ﾘﾌﾄｼﾘﾝﾀﾞｱｯｾﾝ	1	INC.1-15
-	211F0-50211		CYL-ASSY,LIFT VFHM540 ﾘﾌﾄｼﾘﾝﾀﾞｱｯｾﾝ	1	INC.1-15
-	211F0-80161		CYL-ASSY,LIFT VFHM550 ﾘﾌﾄｼﾘﾝﾀﾞｱｯｾﾝ	1	INC.1-15
-	211F0-80171		CYL-ASSY,LIFT VFHM600 ﾘﾌﾄｼﾘﾝﾀﾞｱｯｾﾝ	1	INC.1-15
-	211F0-80181		CYL-ASSY,LIFT VFHM650 ﾘﾌﾄｼﾘﾝﾀﾞｱｯｾﾝ	1	INC.1-15
-	211F0-80191		CYL-ASSY,LIFT VFHM700 ﾘﾌﾄｼﾘﾝﾀﾞｱｯｾﾝ	1	INC.1-15
-	211F0-80201		CYL-ASSY,LIFT VFHM750 ﾘﾌﾄｼﾘﾝﾀﾞｱｯｾﾝ	1	INC.1-15
1	211F0-50331		TUBE VFHM360 ﾁｭｰﾌﾞ	1	
-	211F0-50351		TUBE VFHM400 ﾁｭｰﾌﾞ	1	
-	211F0-50301		TUBE VFHM435 ﾁｭｰﾌﾞ	1	
-	211F0-50371		TUBE VFHM480 ﾁｭｰﾌﾞ	1	
-	211F0-50381		TUBE VFHM500 ﾁｭｰﾌﾞ	1	
-	211F0-50411		TUBE VFHM540 ﾁｭｰﾌﾞ	1	
-	211F0-80361		TUBE VFHM550 ﾁｭｰﾌﾞ	1	
-	211F0-80371		TUBE VFHM600 ﾁｭｰﾌﾞ	1	
-	211F0-80381		TUBE VFHM650 ﾁｭｰﾌﾞ	1	
-	211F0-80391		TUBE VFHM700 ﾁｭｰﾌﾞ	1	
-	211F0-80401		TUBE VFHM750 ﾁｭｰﾌﾞ	1	
2	54238-40311		ROD,PISTON VFHM360 ﾛｯﾄﾞ	1	
-	54238-40321		ROD,PISTON VFHM400 ﾛｯﾄﾞ	1	
-	54238-40301		ROD,PISTON VFHM435 ﾛｯﾄﾞ	1	
-	54238-40331		ROD,PISTON VFHM480 ﾛｯﾄﾞ	1	
-	54238-40341		ROD,PISTON VFHM500 ﾛｯﾄﾞ	1	
-	54238-40351		ROD,PISTON VFHM540 ﾛｯﾄﾞ	1	
-	210F0-81261		ROD,PISTON VFHM550 ﾛｯﾄﾞ	1	
-	54238-40361		ROD,PISTON VFHM600 ﾛｯﾄﾞ	1	
-	210F0-81281		ROD,PISTON VFHM650 ﾛｯﾄﾞ	1	
-	210F0-81291		ROD,PISTON VFHM700 ﾛｯﾄﾞ	1	
-	210F0-81301		ROD,PISTON VFHM750 ﾛｯﾄﾞ	1	
3	22518-40121	*	WEARING ｳｪｱﾘﾝｸﾞ	1	
4	54238-42011	*	RING,PISTON ﾘﾝｸﾞ	1	
5	29560-82012		CAP ｷｬｯﾌﾟ	1	
6	25808-42481	*	SEAL,DUST ｼｰﾙ	1	
7	24230-82211	*	PACKING ﾊﾟｯｷﾝｸﾞ	1	
8	24230-82221	*	RING,BACK-UP ﾘﾝｸﾞ	1	
9	24230-82291	*	O-RING Oﾘﾝｸﾞ	1	
10	24230-82231	*	RING,BACK-UP ﾘﾝｸﾞ	1	
11	25908-44101		PLUG ﾌﾟﾗｸﾞ	1	
12	25908-44111		PLUG,NYLON ﾌﾟﾗｸﾞ	1	
13	23870-52871		PLUG ﾌﾟﾗｸﾞ	1	
14	211F0-82551		PISTON ﾋﾟｽﾄﾝ	1	
15	24389-46021		SPRING ｽﾌﾟﾘﾝｸﾞ	1	
16	215T0-83001		HEAD,PISTON ﾍｯﾄﾞ	1	
-	27390-82011		HEAD,PISTON ﾍｯﾄﾞ	1	[FC][FCS35][FCS55][FCS45]
17	216G8-42031		SHEAVE ｼｰﾌﾞ	2	
-	90789-40100		SHEAVE ｼｰﾌﾞ	2	[FC][FCS35][FCS55][FCS45]

FIG.199 LIFT CYLINDER(FRONT)[VFHM18G]

(M5010810) ﾘﾌﾄｼﾘﾝﾀﾞ(ﾌﾛﾝﾄ)

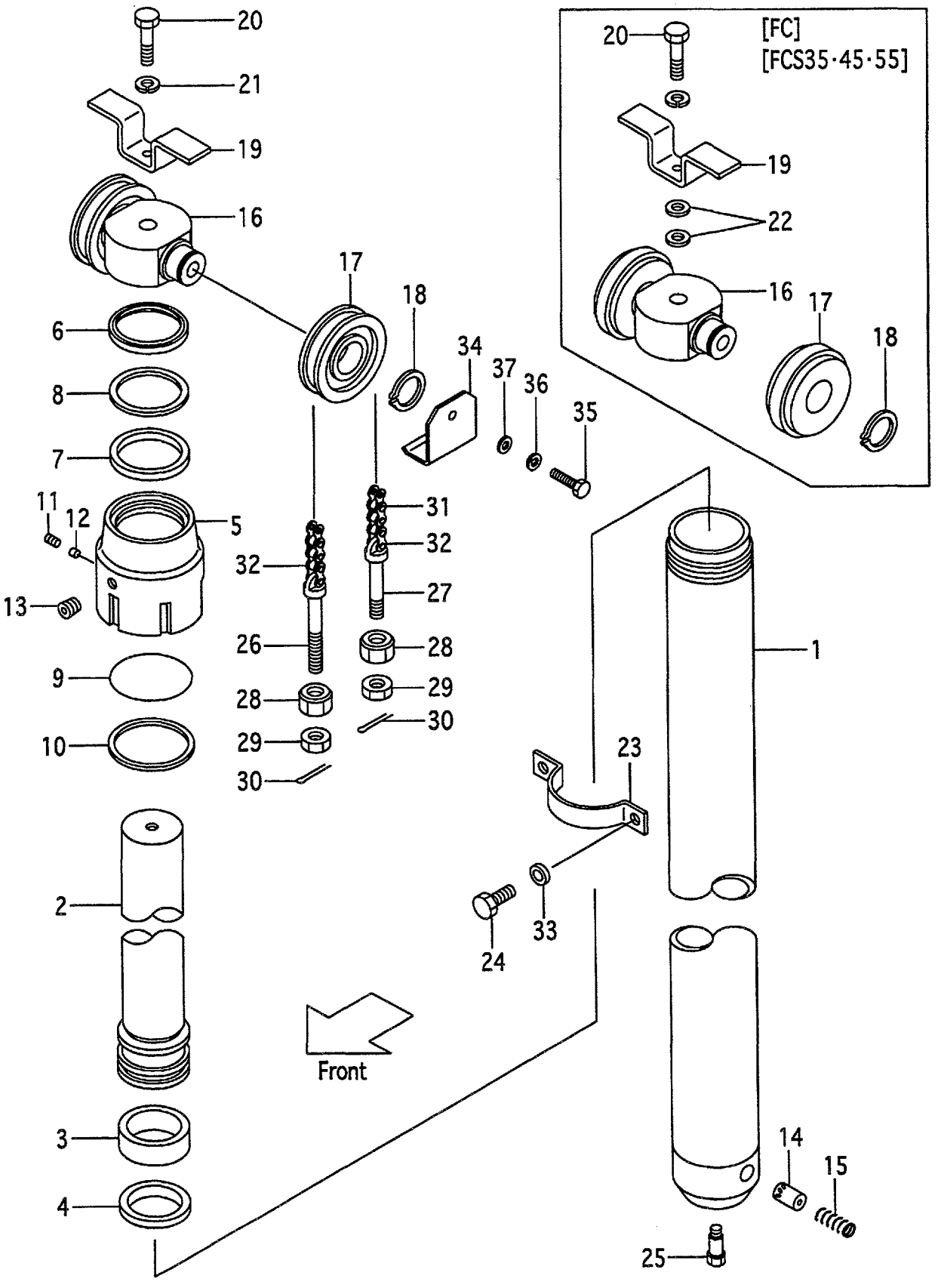

A:VFHM18G(1.0t)
B:VFHM18G(1.5t)
C:VFHM18G(1.8t)

FIG.199
(M5010810)

Item No	Part No.	Mark	Description		Req'd	Remarks : Serial No.
18	02100-00035		RING,SNAP	ｽﾅｯﾌﾟﾘﾝｸﾞ	2	
-	02100-00040		RING,SNAP	ｽﾅｯﾌﾟﾘﾝｸﾞ	2	[FC][FCS35][FCS55][FCS45]
19	215T0-83021		STOPPER	ｽﾄｯﾊﾟ	1	
-	27970-82211		STOPPER	ｽﾄｯﾊﾟ	1	[FC][FCS35][FCS55][FCS45]
20	01100-16060		BOLT	ﾎﾞﾙﾄ	1	
-	01100-16065		BOLT	ﾎﾞﾙﾄ	1	[FC][FCS35][FCS55][FCS45]
21	02010-00016		WASHER	ﾜｯｼｬ	1	
22	02000-00016		WASHER	ﾜｯｼｬ	2	[FC][FCS35][FCS55][FCS45]
23	27390-82101		SUPPORT	ｻﾎﾟｰﾄ	1	
24	01103-10020		BOLT	ﾎﾞﾙﾄ	2	
25	214A0-82831		BOLT	ﾎﾞﾙﾄ	1	
26	218G8-42501		PIN,ANCHOR	ﾋﾟﾝ	2	
-	510F5-54051		PIN,ANCHOR	ﾋﾟﾝ	2	[FC][FCS35][FCS55][FCS45]
27	218G8-42521		PIN,ANCHOR	ﾋﾟﾝ	2	
-	510F5-54061		PIN,ANCHOR	ﾋﾟﾝ	2	[FC][FCS35][FCS55][FCS45]
28	22118-40181		NUT	ﾅｯﾄ	4	
29	01400-00014		NUT	ﾅｯﾄ	4	
30	02200-03030		PIN	ﾋﾟﾝ	4	
31	218G8-45771		CHAIN VFHM360	ﾁｪｰﾝ	2	
-	218G8-45851		CHAIN VFHM400	ﾁｪｰﾝ	2	
-	218G8-45931		CHAIN VFHM435	ﾁｪｰﾝ	2	
-	218G8-46031		CHAIN VFHM480	ﾁｪｰﾝ	2	
-	218G8-46091		CHAIN VFHM500	ﾁｪｰﾝ	2	
-	218G8-46171		CHAIN VFHM540	ﾁｪｰﾝ	2	
-	218G8-46191		CHAIN VFHM550	ﾁｪｰﾝ	2	
-	218G8-46311		CHAIN VFHM600	ﾁｪｰﾝ	2	
-	218G8-46451		CHAIN VFHM650	ﾁｪｰﾝ	2	
-	218G8-46591		CHAIN VFHM700	ﾁｪｰﾝ	2	
-	218G8-46691		CHAIN VFHM750	ﾁｪｰﾝ	2	
-	09001-08051		CHAIN VFHM360	ﾁｪｰﾝ	2	[FC][FCS35][FCS55][FCS45]
-	09001-08057		CHAIN VFHM400	ﾁｪｰﾝ	2	[FC][FCS35][FCS55][FCS45]
-	09001-08061		CHAIN VFHM435	ﾁｪｰﾝ	2	[FC][FCS35][FCS55][FCS45]
-	09001-08067		CHAIN VFHM480	ﾁｪｰﾝ	2	[FC][FCS35][FCS55][FCS45]
-	09001-08071		CHAIN VFHM500	ﾁｪｰﾝ	2	[FC][FCS35][FCS55][FCS45]
-	09001-08077		CHAIN VFHM540	ﾁｪｰﾝ	2	[FC][FCS35][FCS55][FCS45]
-	09001-08079		CHAIN VFHM550	ﾁｪｰﾝ	2	[FC][FCS35][FCS55][FCS45]
-	09001-08085		CHAIN VFHM600	ﾁｪｰﾝ	2	[FC][FCS35][FCS55][FCS45]
-	09001-08093		CHAIN VFHM650	ﾁｪｰﾝ	2	[FC][FCS35][FCS55][FCS45]
-	09001-08103		CHAIN VFHM700	ﾁｪｰﾝ	2	[FC][FCS35][FCS55][FCS45]
-	09001-08109		CHAIN VFHM750	ﾁｪｰﾝ	2	[FC][FCS35][FCS55][FCS45]
32	218G8-42701		LINK	ﾘﾝｸ	2	
33	02011-00010		WASHER	ﾜｯｼｬ	2	
34	57393-02041		COVER	ｶﾊﾞｰ	2	[EXD][EXE][EXN]
35	01100-16016		BOLT	ﾎﾞﾙﾄ	2	[EXD][EXE][EXN]
36	02010-00016		WASHER	ﾜｯｼｬ	2	[EXD][EXE][EXN]
37	02000-00016		WASHER	ﾜｯｼｬ	2	[EXD][EXE][EXN]
K1	27390-59801		KIT,OVERHAUL	ｵｰﾊﾞﾎｰﾙｷｯﾄ	1	INC.3,4,6-10

FIG.200 LIFT CYLINDER (REAR)[VFHM18G]

(M5010820) リフトシリンダ(リヤー)

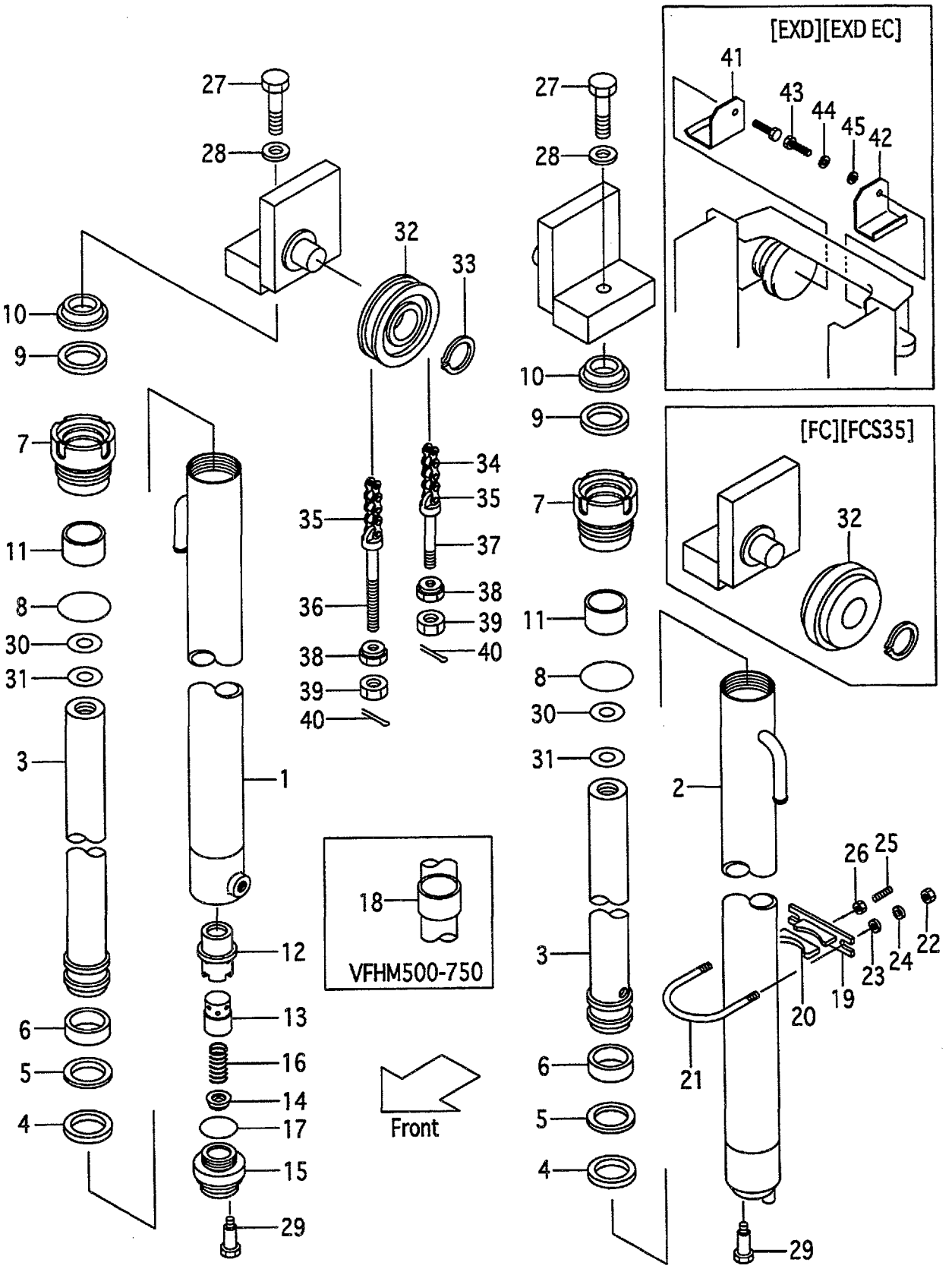

A:VFHM18G(1.0t)
B:VFHM18G(1.5t)
C:VFHM18G(1.8t)

FIG.200
(M5010820)

Item No	Part No.	Mark	Description	Req'd	Remarks : Serial No.
A1	216G0-80113		CYL-ASSY,LIFT,RH VFHM360 リフトシリンダアッセン	1	INC.1,3-18
-	216G0-80123		CYL-ASSY,LIFT,RH VFHM400 リフトシリンダアッセン	1	INC.1,3-18
-	216G0-80103		CYL-ASSY,LIFT,RH VFHM435 リフトシリンダアッセン	1	INC.1,3-18
-	216G0-80133		CYL-ASSY,LIFT,RH VFHM480 リフトシリンダアッセン	1	INC.1,3-18
-	216G0-80144		CYL-ASSY,LIFT,RH VFHM500 リフトシリンダアッセン	1	INC.1,3-18
-	216G0-80154		CYL-ASSY,LIFT,RH VFHM540 リフトシリンダアッセン	1	INC.1,3-18
-	216G0-80164		CYL-ASSY,LIFT,RH VFHM550 リフトシリンダアッセン	1	INC.1,3-18
-	216G0-80174		CYL-ASSY,LIFT,RH VFHM600 リフトシリンダアッセン	1	INC.1,3-18
-	216G0-80184		CYL-ASSY,LIFT,RH VFHM650 リフトシリンダアッセン	1	INC.1,3-18
-	216G0-80194		CYL-ASSY,LIFT,RH VFHM700 リフトシリンダアッセン	1	INC.1,3-18
-	216G0-80204		CYL-ASSY,LIFT,RH VFHM750 リフトシリンダアッセン	1	INC.1,3-18
A2	216G0-80313		CYL-ASSY,LIFT,LH VFHM360 リフトシリンダアッセン	1	INC.2-11,18
-	216G0-80323		CYL-ASSY,LIFT,LH VFHM400 リフトシリンダアッセン	1	INC.2-11,18
-	216G0-80303		CYL-ASSY,LIFT,LH VFHM435 リフトシリンダアッセン	1	INC.2-11,18
-	216G0-80333		CYL-ASSY,LIFT,LH VFHM480 リフトシリンダアッセン	1	INC.2-11,18
-	216G0-80344		CYL-ASSY,LIFT,LH VFHM500 リフトシリンダアッセン	1	INC.2-11,18
-	216G0-80354		CYL-ASSY,LIFT,LH VFHM540 リフトシリンダアッセン	1	INC.2-11,18
-	216G0-80364		CYL-ASSY,LIFT,LH VFHM550 リフトシリンダアッセン	1	INC.2-11,18
-	216G0-80374		CYL-ASSY,LIFT,LH VFHM600 リフトシリンダアッセン	1	INC.2-11,18
-	216G0-80384		CYL-ASSY,LIFT,LH VFHM650 リフトシリンダアッセン	1	INC.2-11,18
-	216G0-80394		CYL-ASSY,LIFT,LH VFHM700 リフトシリンダアッセン	1	INC.2-11,18
-	216G0-80404		CYL-ASSY,LIFT,LH VFHM750 リフトシリンダアッセン	1	INC.2-11,18
1	216G0-80512		TUBE RH VFHM360 チューブ	1	
-	216G0-80522		TUBE RH VFHM400 チューブ	1	
-	216G0-80502		TUBE RH VFHM435 チューブ	1	
-	216G0-80532		TUBE RH VFHM480 チューブ	1	
-	216G0-80542		TUBE RH VFHM500 チューブ	1	
-	216G0-80552		TUBE RH VFHM540 チューブ	1	

FIG.200 LIFT CYLINDER (REAR)[VFHM18G]

(M5010820) リフトシリンダ(リヤー)

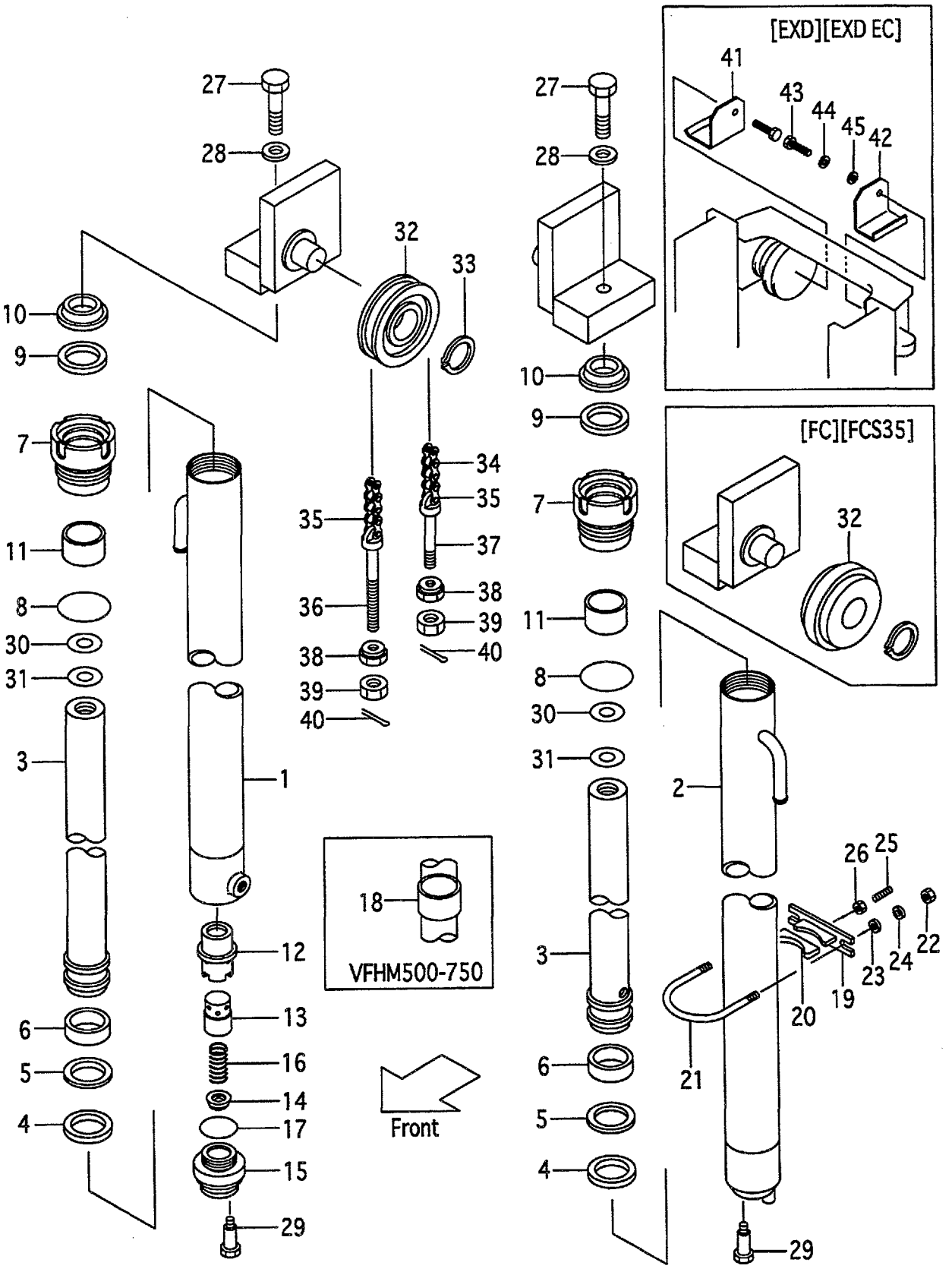

A:VFHM18G(1.0t)
B:VFHM18G(1.5t)
C:VFHM18G(1.8t)

FIG.200
(M5010820)

Item No	Part No.	Mark	Description		Req'd	Remarks : Serial No.
-	216G0-80562		TUBE RH VFHM550	ﾁｭｰﾌﾞ	1	
-	216G0-80572		TUBE RH VFHM600	ﾁｭｰﾌﾞ	1	
-	216G0-80582		TUBE RH VFHM650	ﾁｭｰﾌﾞ	1	
-	216G0-80592		TUBE RH VFHM700	ﾁｭｰﾌﾞ	1	
-	216G0-80602		TUBE RH VFHM750	ﾁｭｰﾌﾞ	1	
2	216G0-80712		TUBE LH VFHM360	ﾁｭｰﾌﾞ	1	
-	216G0-80722		TUBE LH VFHM400	ﾁｭｰﾌﾞ	1	
-	216G0-80702		TUBE LH VFHM435	ﾁｭｰﾌﾞ	1	
-	216G0-80732		TUBE LH VFHM480	ﾁｭｰﾌﾞ	1	
-	216G0-80742		TUBE LH VFHM500	ﾁｭｰﾌﾞ	1	
-	216G0-80752		TUBE LH VFHM540	ﾁｭｰﾌﾞ	1	
-	216G0-80762		TUBE LH VFHM550	ﾁｭｰﾌﾞ	1	
-	216G0-80772		TUBE LH VFHM600	ﾁｭｰﾌﾞ	1	
-	216G0-80782		TUBE LH VFHM650	ﾁｭｰﾌﾞ	1	
-	216G0-80792		TUBE LH VFHM700	ﾁｭｰﾌﾞ	1	
-	216G0-80802		TUBE LH VFHM750	ﾁｭｰﾌﾞ	1	
3	216G0-81311		ROD,PISTON VFHM360	ﾛｯﾄﾞ	2	
-	216G0-81321		ROD,PISTON VFHM400	ﾛｯﾄﾞ	2	
-	216G0-81301		ROD,PISTON VFHM435	ﾛｯﾄﾞ	2	
-	216G0-81331		ROD,PISTON VFHM480	ﾛｯﾄﾞ	2	
-	216G0-81341		ROD,PISTON VFHM500	ﾛｯﾄﾞ	2	
-	216G0-81351		ROD,PISTON VFHM540	ﾛｯﾄﾞ	2	
-	216G0-81361		ROD,PISTON VFHM550	ﾛｯﾄﾞ	2	
-	216G0-80173		ROD,PISTON VFHM600	ﾛｯﾄﾞ	2	
-	216G0-81381		ROD,PISTON VFHM650	ﾛｯﾄﾞ	2	
-	216G0-81391		ROD,PISTON VFHM700	ﾛｯﾄﾞ	2	
-	216G0-81401		ROD,PISTON VFHM750	ﾛｯﾄﾞ	2	
4	22580-53311	*	PACKING	ﾊﾟｯｷﾝｸﾞ	2	
5	23650-52861	*	RING,BACK-UP	ﾘﾝｸﾞ	2	
6	22580-53321	*	WEARING	ｳｪｱﾘﾝｸﾞ	2	
7	216G8-42601		CAP,CYL	ｷｬｯﾌﾟ	2	
8	216G8-42631	*	O-RING	Oﾘﾝｸﾞ	2	
9	216G8-42641	*	PACKING	ﾊﾟｯｷﾝｸﾞ	2	
10	216G8-42651	*	SEAL,DUST	ｼｰﾙ	2	
11	216G8-42621		BUSHING	ﾌﾞｯｼﾝｸﾞ	2	
12	53658-43021		SLEEVE	ｽﾘｰﾌﾞ	1	[RH]
13	53658-43011		PISTON	ﾋﾟｽﾄﾝ	1	[RH]
14	53658-43001		VALVE,CHECK	ﾊﾞﾙﾌﾞ	1	[RH]
15	53658-43041		PLUG	ﾌﾟﾗｸﾞ	1	[RH]
16	53658-43031		SPRING	ｽﾌﾟﾘﾝｸﾞ	1	[RH]
17	03320-00340		O-RING	Oﾘﾝｸﾞ	1	[RH]
18	216G8-42661		SPACER VFHM500	ｽﾍﾟｰｻ	2	
-	278P0-82141		SPACER VFHM540	ｽﾍﾟｰｻ	2	
-	216G8-42661		SPACER VFHM550	ｽﾍﾟｰｻ	2	
-	278P0-82151		SPACER VFHM600	ｽﾍﾟｰｻ	2	
-	278P0-82121		SPACER VFHM650	ｽﾍﾟｰｻ	2	
-	278P0-82131		SPACER VFHM700	ｽﾍﾟｰｻ	2	
-	278P0-82131		SPACER VFHM750	ｽﾍﾟｰｻ	2	
A3	215E8-42171		SUPPORT-ASSY	ｻﾎﾟｰﾄｱｯｾﾝ	2	INC.19,20
19	215E8-42181		SUPPORT	ｻﾎﾟｰﾄ	2	

FIG.200 LIFT CYLINDER (REAR)[VFHM18G]

(M5010820) リフトシリンダ(リヤー)

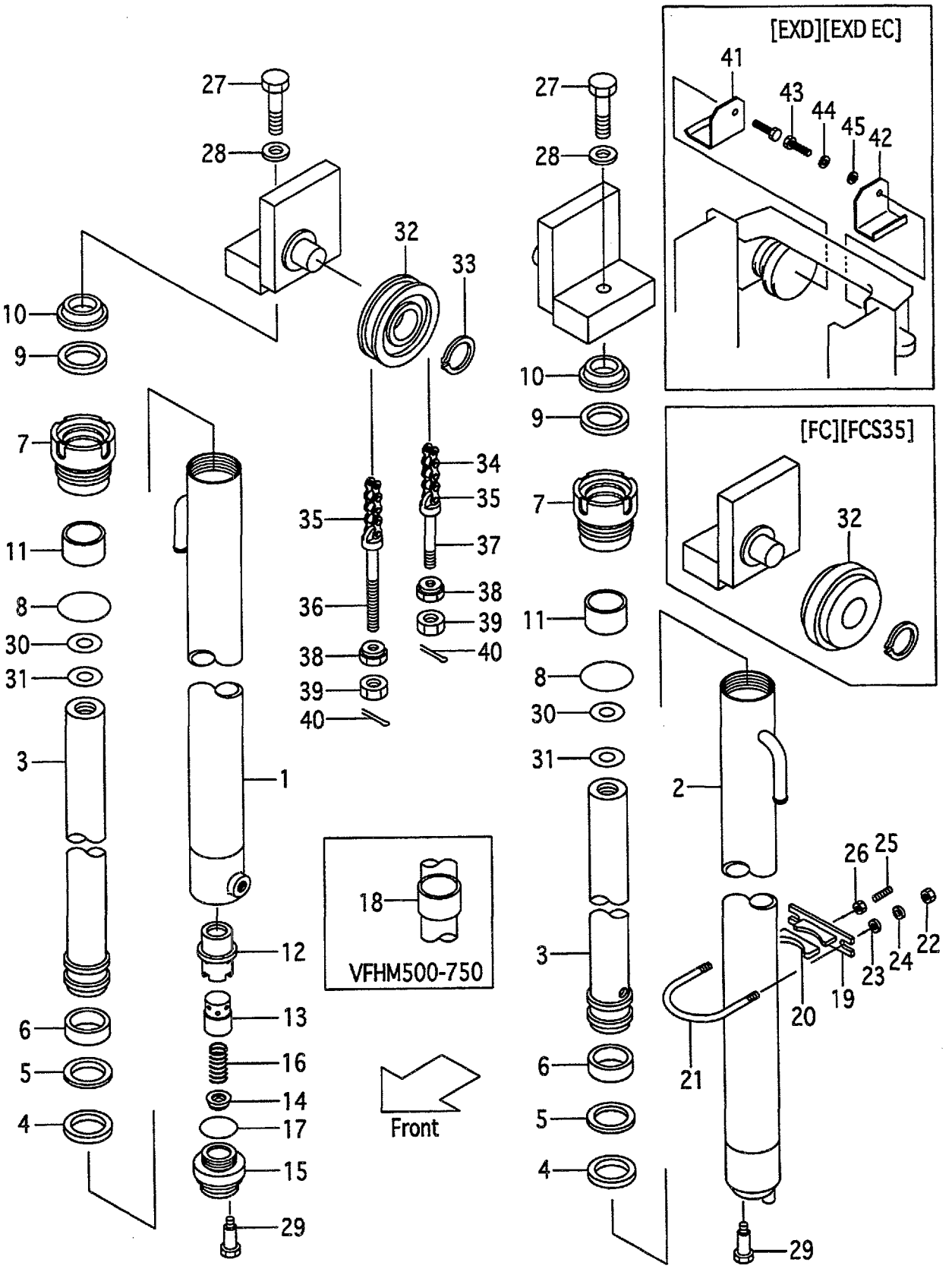

A:VFHM18G(1.0t)
B:VFHM18G(1.5t)
C:VFHM18G(1.8t)

FIG.200
(M5010820)

Item No	Part No.	Mark	Description		Req'd	Remarks : Serial No.
20	24868-42111		RUBBER	ﾗﾊﾞｰ	2	
21	216G8-43161		U-BOLT	Uﾎﾞﾙﾄ	2	
22	234A8-42561		NUT	ﾅｯﾄ	4	
23	02000-20010		WASHER	ﾜｯｼｬ	4	
24	02010-20010		WASHER	ﾜｯｼｬ	4	
25	215E8-42231		BOLT	ﾎﾞﾙﾄ	2	
26	234A8-42571		NUT	ﾅｯﾄ	2	
27	01103-14040		BOLT	ﾎﾞﾙﾄ	2	
28	02011-00014		WASHER	ﾜｯｼｬ	2	
29	214A8-42661		BOLT	ﾎﾞﾙﾄ	2	
30	22517-40051		SHIM	ｼﾑ	2	
31	22717-40081		SHIM	ｼﾑ	2	
32	234A8-43501		SHEAVE	ｼｰﾌﾞ	2	
-	90789-40100		SHEAVE	ｼｰﾌﾞ	2	[FC][FCS35][FCS55][FCS45]
33	02100-00040		RING,SNAP	ｽﾅｯﾌﾟﾘﾝｸﾞ	2	
34	218G8-45931		CHAIN VFHM360	ﾁｪｰﾝ	2	
-	218G8-46011		CHAIN VFHM400	ﾁｪｰﾝ	2	
-	218G8-46091		CHAIN VFHM435	ﾁｪｰﾝ	2	
-	218G8-46191		CHAIN VFHM480	ﾁｪｰﾝ	2	
-	218G8-46251		CHAIN VFHM500	ﾁｪｰﾝ	2	
-	218G8-46331		CHAIN VFHM540	ﾁｪｰﾝ	2	
-	218G8-46351		CHAIN VFHM550	ﾁｪｰﾝ	2	
-	218G8-46471		CHAIN VFHM600	ﾁｪｰﾝ	2	
-	218G8-46611		CHAIN VFHM650	ﾁｪｰﾝ	2	
-	218G8-46751		CHAIN VFHM700	ﾁｪｰﾝ	2	
-	218G8-46851		CHAIN VFHM750	ﾁｪｰﾝ	2	
-	09001-08059		CHAIN VFHM360	ﾁｪｰﾝ	2	[FC][FCS35][FCS55][FCS45]
-	09001-08065		CHAIN VFHM400	ﾁｪｰﾝ	2	[FC][FCS35][FCS55][FCS45]
-	09001-08069		CHAIN VFHM435	ﾁｪｰﾝ	2	[FC][FCS35][FCS55][FCS45]
-	09001-08075		CHAIN VFHM480	ﾁｪｰﾝ	2	[FC][FCS35][FCS55][FCS45]
-	09001-08079		CHAIN VFHM500	ﾁｪｰﾝ	2	[FC][FCS35][FCS55][FCS45]
-	09001-08083		CHAIN VFHM540	ﾁｪｰﾝ	2	[FC][FCS35][FCS55][FCS45]
-	09001-08085		CHAIN VFHM550	ﾁｪｰﾝ	2	[FC][FCS35][FCS55][FCS45]
-	09001-08093		CHAIN VFHM600	ﾁｪｰﾝ	2	[FC][FCS35][FCS55][FCS45]
-	09001-08101		CHAIN VFHM650	ﾁｪｰﾝ	2	[FC][FCS35][FCS55][FCS45]
-	09001-08109		CHAIN VFHM700	ﾁｪｰﾝ	2	[FC][FCS35][FCS55][FCS45]
-	09001-08117		CHAIN VFHM750	ﾁｪｰﾝ	2	[FC][FCS35][FCS55][FCS45]
35	218G8-42701		LINK	ﾘﾝｸ	2	
36	218G8-42501		PIN,ANCHOR	ﾋﾟﾝ	2	
-	510F5-54051		PIN,ANCHOR	ﾋﾟﾝ	2	[FC][FCS35][FCS55][FCS45]
37	218G8-42511		PIN,ANCHOR	ﾋﾟﾝ	2	
-	510F5-54061		PIN,ANCHOR	ﾋﾟﾝ	2	[FC][FCS35][FCS55][FCS45]
38	22118-40181		NUT	ﾅｯﾄ	4	
39	01400-00014		NUT	ﾅｯﾄ	4	
40	02200-03030		PIN	ﾋﾟﾝ	4	
41	514A3-04221		COVER	ｶﾊﾞｰ	1	[EXD][EXE][EXN]
42	514A3-04201		COVER	ｶﾊﾞｰ	1	[EXD][EXE][EXN]
43	01100-16016		BOLT	ﾎﾞﾙﾄ	1	[EXD][EXE][EXN]
44	02010-00016		WASHER	ﾜｯｼｬ	1	[EXD][EXE][EXN]
45	02000-00016		WASHER	ﾜｯｼｬ	1	[EXD][EXE][EXN]

FIG.200 LIFT CYLINDER (REAR)[VFHM18G]

(M5010820) リフトシリンダ(リヤー)

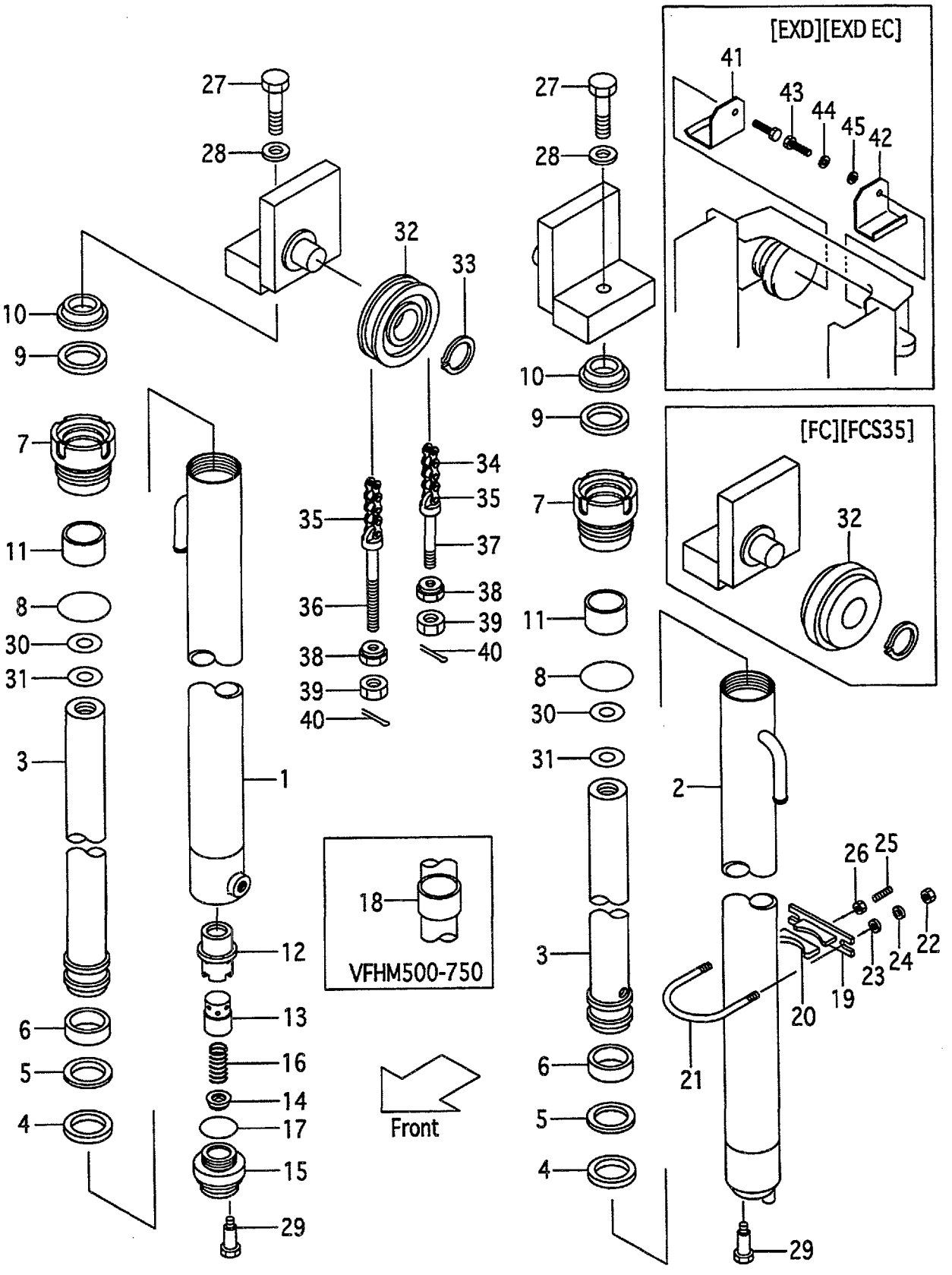

A:VFHM18G(1.0t)
B:VFHM18G(1.5t)
C:VFHM18G(1.8t)

FIG.200
(M5010820)

Item No	Part No.	Mark	Description	Req'd	Remarks : Serial No.
K1	216G0-89821		KIT,OVERHAUL オーバホールキット	2	INC.4-6,8-10

FIG.201 MAST PIPING[VFHM18G]

(M5010830) マストパイピング

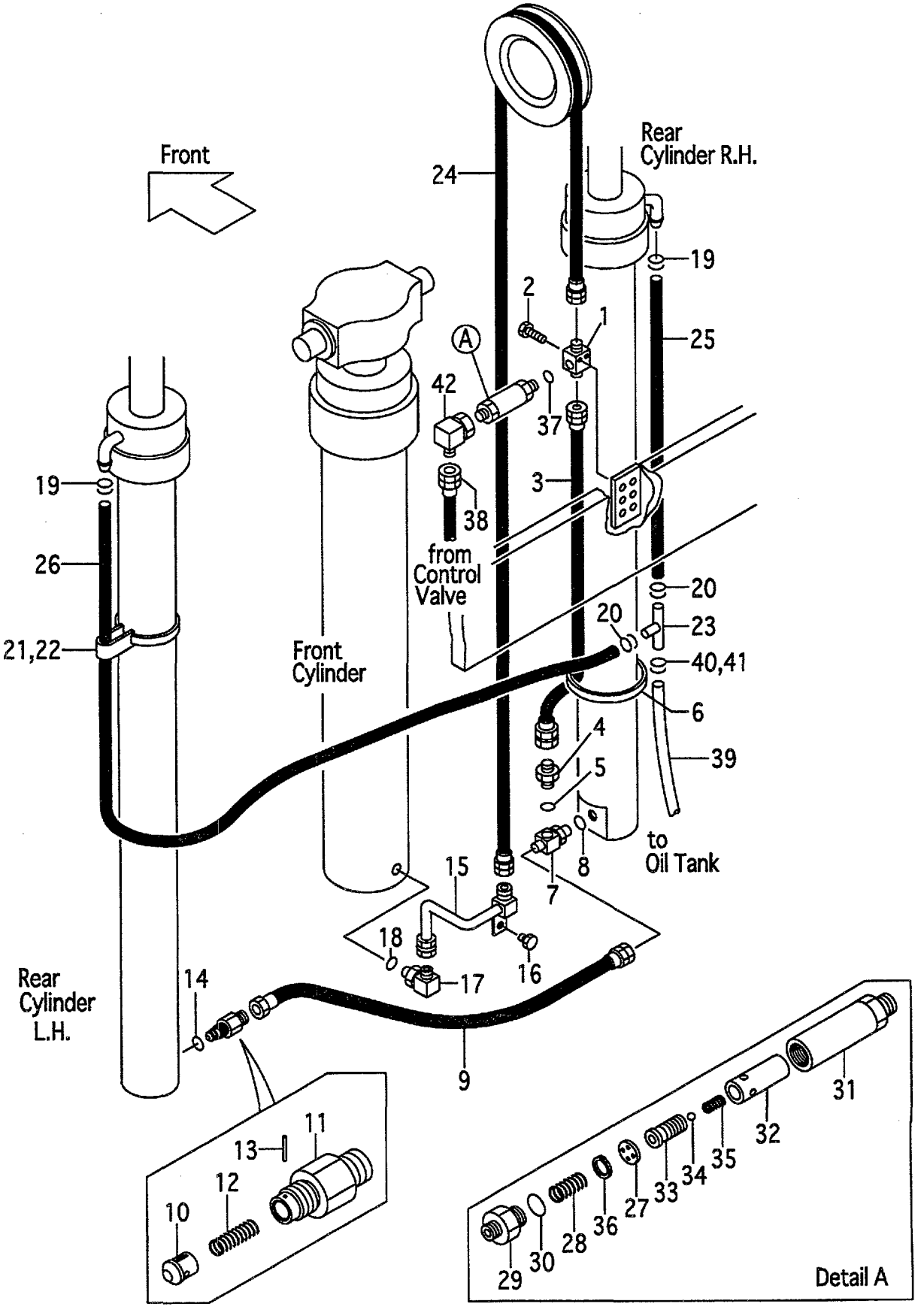

A:VFHM18G(1.0t)
B:VFHM18G(1.5t)
C:VFHM18G(1.8t)

FIG.201
(M5010830)

Item No	Part No.	Mark	Description		Req'd	Remarks : Serial No.
1	229F0-94101		THREE-WAY	ｽﾘｰｳｪｲ	1	
2	01184-10040		BOLT & WASHER	ﾎﾞﾙﾄ & ﾜｯｼｬ	2	
3	216G0-93151		HOSE	ﾎｰｽ	1	
A1	04134-20404		NIPPLE-ASSY	ﾆｯﾌﾟﾙｱｯｾﾝ	1	INC.4,5
4	04134-00404		NIPPLE	ﾆｯﾌﾟﾙ	1	
5	03320-00180		O-RING	Oﾘﾝｸﾞ	1	
6	25790-94021		BAND	ﾊﾞﾝﾄﾞ	1	
A2	216G0-93101		THREE-WAY-ASSY	ｽﾘｰｳｪｲｱｯｾﾝ	1	INC.7,8
7	NO PART NO.	#	THREE-WAY	ｽﾘｰｳｪｲ	1	
8	03320-00140	*	O-RING	Oﾘﾝｸﾞ	1	
9	234A8-02201		HOSE	ﾎｰｽ	1	
A3	216G0-93201		VALVE-ASSY,CUT	ｶｯﾄﾊﾞﾙﾌﾞｱｯｾﾝ	1	INC.10-14
10	216G0-93212		PISTON	ﾋﾟｽﾄﾝ	1	
11	234A8-42622		NIPPLE	ﾆｯﾌﾟﾙ	1	
12	234A8-42611		SPRING	ｽﾌﾟﾘﾝｸﾞ	1	
13	02270-01014		PIN	ﾋﾟﾝ	1	
14	03320-00140	*	O-RING	Oﾘﾝｸﾞ	1	
15	211F0-93001		PIPE	ﾊﾟｲﾌﾟ	1	
16	01185-08016		BOLT & WASHER	ﾎﾞﾙﾄ & ﾜｯｼｬ	1	
A4	229F0-91001		ELBOW-ASSY	ｴﾙﾎﾞｱｯｾﾝ	1	INC.17,18
17	NO PART NO.	#	ELBOW	ｴﾙﾎﾞ	1	
18	03320-00240		O-RING	Oﾘﾝｸﾞ	1	
19	04911-00018		CLIP	ｸﾘｯﾌﾟ	2	
20	04911-00018		CLIP	ｸﾘｯﾌﾟ	2	
21	04913-21380		BAND	ﾊﾞﾝﾄﾞ	2	
22	23678-42401		BAND,HOSE	ﾊﾞﾝﾄﾞ	2	
23	23679-45051		THREE-WAY	ｽﾘｰｳｪｲ	1	
24	04601-44230		HOSE VFHM360	ﾎｰｽ	1	
-	04601-44255		HOSE VFHM400	ﾎｰｽ	1	
-	04601-44280		HOSE VFHM435	ﾎｰｽ	1	
-	04601-44309		HOSE VFHM480	ﾎｰｽ	1	
-	04601-44329		HOSE VFHM500	ﾎｰｽ	1	
-	04601-44353		HOSE VFHM540	ﾎｰｽ	1	
-	04601-44361		HOSE VFHM550	ﾎｰｽ	1	
-	04601-44397		HOSE VFHM600	ﾎｰｽ	1	
-	04601-44440		HOSE VFHM650	ﾎｰｽ	1	
-	04601-44483		HOSE VFHM700	ﾎｰｽ	1	
-	04601-44516		HOSE VFHM750	ﾎｰｽ	1	
25	23678-40100		HOSE VFHM360	ﾎｰｽ	1	
-	23678-40115		HOSE VFHM400	ﾎｰｽ	1	
-	23678-40125		HOSE VFHM435	ﾎｰｽ	1	
-	23678-40140		HOSE VFHM480	ﾎｰｽ	1	
-	23678-40150		HOSE VFHM500	ﾎｰｽ	1	
-	23678-40165		HOSE VFHM540	ﾎｰｽ	1	
-	23678-40170		HOSE VFHM550	ﾎｰｽ	1	
-	23678-40185		HOSE VFHM600	ﾎｰｽ	1	
-	23678-40210		HOSE VFHM650	ﾎｰｽ	1	
-	23678-40230		HOSE VFHM700	ﾎｰｽ	1	
-	23678-40245		HOSE VFHM750	ﾎｰｽ	1	
26	23678-40150		HOSE VFHM360	ﾎｰｽ	1	

FIG.201 MAST PIPING[VFHM18G]

(M5010830) マストパイピング

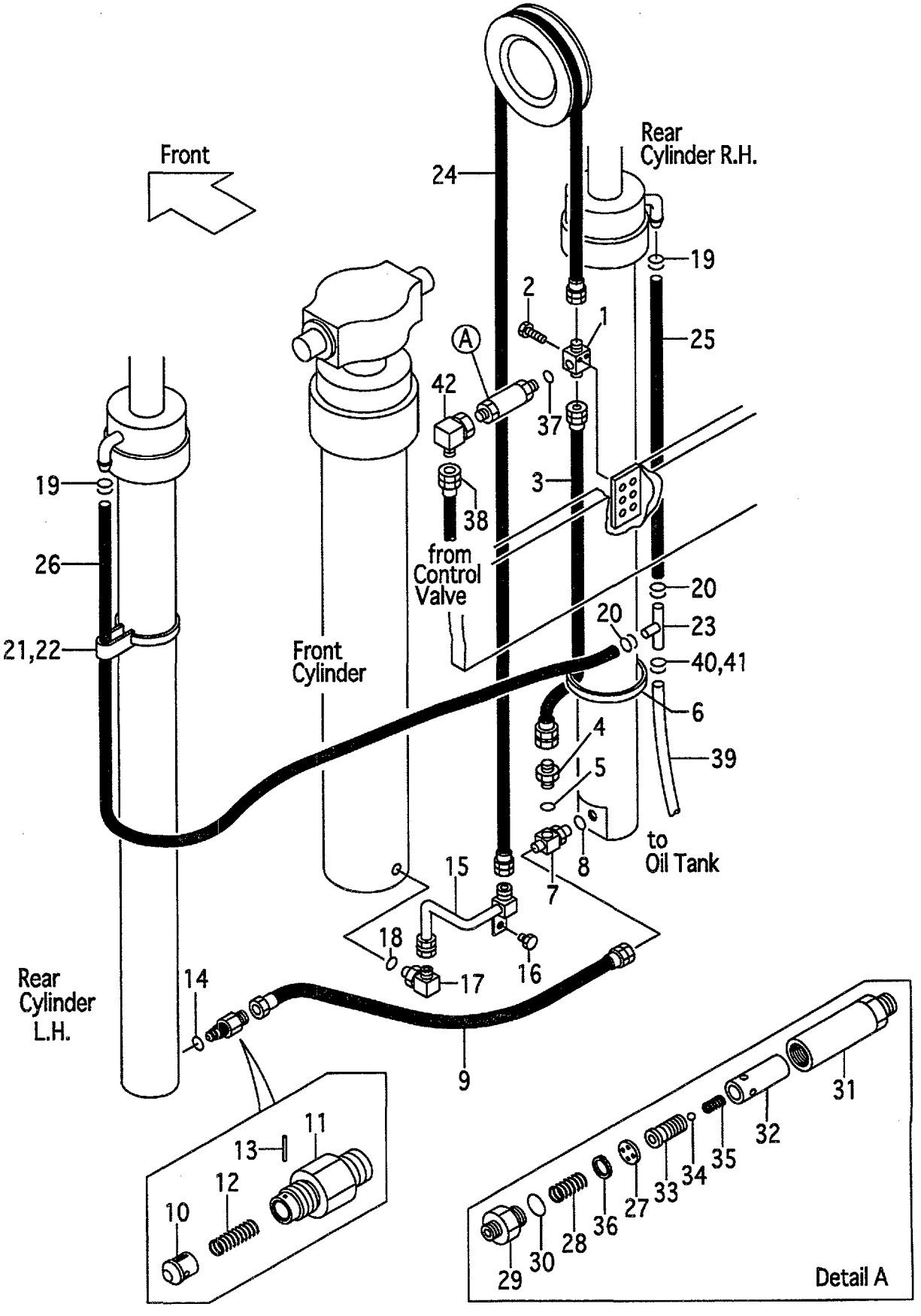

A:VFHM18G(1.0t)
B:VFHM18G(1.5t)
C:VFHM18G(1.8t)

FIG.201
(M5010830)

Item No	Part No.	Mark	Description		Req'd	Remarks : Serial No.
-	23678-40165		HOSE VFHM400	ホース	1	
-	23678-40175		HOSE VFHM435	ホース	1	
-	23678-40190		HOSE VFHM480	ホース	1	
-	23678-40200		HOSE VFHM500	ホース	1	
-	23678-40215		HOSE VFHM540	ホース	1	
-	23678-40220		HOSE VFHM550	ホース	1	
-	23678-40235		HOSE VFHM600	ホース	1	
-	23678-40260		HOSE VFHM650	ホース	1	
-	23678-40280		HOSE VFHM700	ホース	1	
-	23678-40295		HOSE VFHM750	ホース	1	
A5	216G8-41001		REGULATOR-ASSY	レギュレータアッセン	1	INC.27-36
27	NO PART NO.	#	PLATE	プレート	1	
28	27979-43101		SPRING	スプリング	1	
29	NO PART NO.	#	NIPPLE	ニップル	1	
30	03300-00280		O-RING	Oリング	1	
31	NO PART NO.	#	CASE	ケース	1	
32	NO PART NO.	#	SLEEVE	スリーブ	1	
33	NO PART NO.	#	PISTON	ピストン	1	
34	24459-42951		BALL,NYLON	ボール	1	
35	214A8-44151		SPRING	スプリング	1	
36	02110-00018		RING,SNAP	スナップリング	1	
37	03320-00180		O-RING	Oリング	1	
38	277P0-92131		HOSE	ホース	1	
-	04691-04066		HOSE	ホース	1	[FC][FCS35][FCS55][FCS45]
39	23678-40095		HOSE	ホース	1	
-	04710-04110		HOSE	ホース	1	[FC][FCS35][FCS55][FCS45] [RTL]
40	04911-00018		CLIP	クリップ	1	
-	04911-00021		CLIP	クリップ	1	[FC][FCS35][FCS55][FCS45] [RTL]
41	04914-00016		CLIP	クリップ	1	
-	04911-00021		CLIP	クリップ	1	[FC][FCS35][FCS55][FCS45] [RTL]
42	62150-14321		ELBOW	エルボ	1	

FIG.202 LIFT BRACKET[VFHM18G]

(M5010910) リフトブラケット

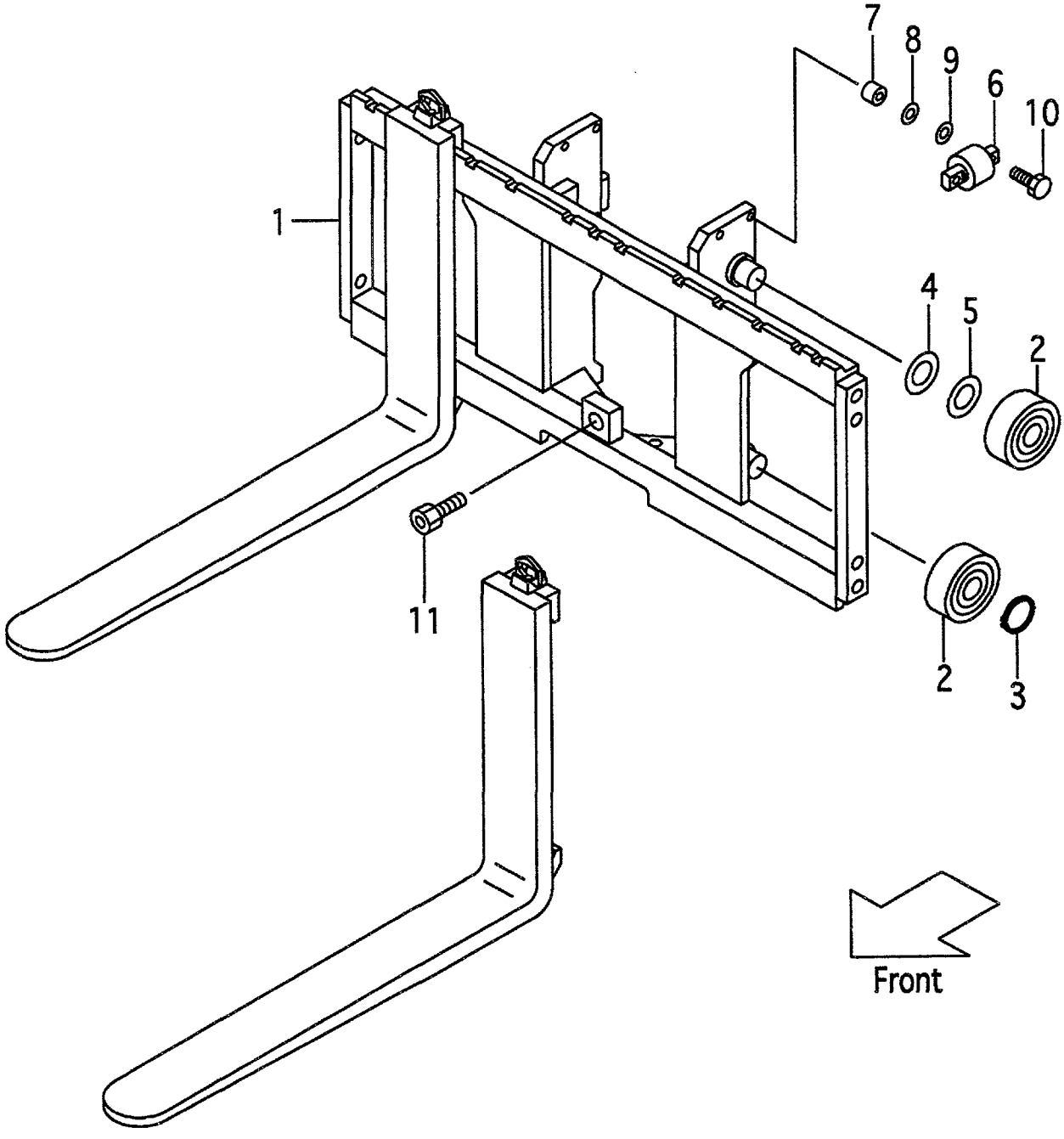

A:VFHM18G(1.0t)
B:VFHM18G(1.5t)
C:VFHM18G(1.8t)

FIG.202
(M5010910)

Item No	Part No.	Mark	Description		Req'd	Remarks : Serial No.
1	218G0-90101		BRACKET,LIFT	ﾘﾌﾄﾌﾞﾗｹｯﾄ	1	
-	518G1-61501		BRACKET,LIFT	ﾘﾌﾄﾌﾞﾗｹｯﾄ	1	[WFY110][WFY114][WFY127] [WFY135][WFY138]
-	518G1-61601		BRACKET,LIFT	ﾘﾌﾄﾌﾞﾗｹｯﾄ	1	[WFY135][WFY138][WFY145] [WFY146][WFY154][WFY180]
2	211F8-22201		ROLLER,END,102.0	ﾛｰﾗ	4	
-	211F8-22211		ROLLER,END,102.5	ﾛｰﾗ	(4)	
-	511F3-74021		ROLLER,END,102.0	ﾛｰﾗ	4	[FC][CS35][FCS35][FCS55] [FCS45]
-	511F3-74031		ROLLER,END,102.5	ﾛｰﾗ	(4)	[FC][CS35][FCS35][FCS55] [FCS45]
3	02100-00035		RING,SNAP	ｽﾅｯﾌﾟﾘﾝｸﾞ	2	
4	211F8-22261		SHIM,T-0.5	ｼﾑ	4	
5	211F8-22271		SHIM,T-1.0	ｼﾑ	8	
6	22018-30304		ROLLER,SIDE	ﾛｰﾗ	2	
-	510F3-74001		ROLLER,SIDE	ﾛｰﾗ	2	[FC][CS35][FCS35][FCS55] [FCS45]
7	22578-32841		SPACER	ｽﾍﾟｰｻ	4	
8	22018-30261		SHIM	ｼﾑ	8	
9	22018-30121		SHIM	ｼﾑ	4	
10	01183-10050		BOLT & WASHER	ﾎﾞﾙﾄ & ﾜｯｼｬ	4	
11	01184-12025		BOLT & WASHER	ﾎﾞﾙﾄ & ﾜｯｼｬ	1	
12	210F0-93001	+	CHART,CAPACITY	ﾁｬｰﾄ	1	A [VFHM360-500]
-	210F0-93011	+	CHART,CAPACITY	ﾁｬｰﾄ	1	A [VFHM540-750]
-	210F0-93201	+	CHART,CAPACITY	ﾁｬｰﾄ	1	B [VFHM360-500]
-	210F0-93211	+	CHART,CAPACITY	ﾁｬｰﾄ	1	B [VFHM540-750]
-	210F0-93301	+	CHART,CAPACITY	ﾁｬｰﾄ	1	C [VFHM360-500]
-	210F0-93311	+	CHART,CAPACITY	ﾁｬｰﾄ	1	C [VFHM540-750]
-	524T3-84031	+	CHART,CAPACITY	ﾁｬｰﾄ	1	[EXR](RUSSIA)
-	210F0-93031	+	CHART,CAPACITY	ﾁｬｰﾄ	1	A [VFHM360-500][EXA] (ENGLISH)
-	210F0-93041	+	CHART,CAPACITY	ﾁｬｰﾄ	1	A [VFHM540-750][EXA] (ENGLISH)
-	210F0-93231	+	CHART,CAPACITY	ﾁｬｰﾄ	1	B [VFHM360-500][EXA] (ENGLISH)
-	210F0-93241	+	CHART,CAPACITY	ﾁｬｰﾄ	1	B [VFHM540-750][EXA] (ENGLISH)
-	210F0-93331	+	CHART,CAPACITY	ﾁｬｰﾄ	1	C [VFHM360-500][EXA] (ENGLISH)

FIG.202 LIFT BRACKET[VFHM18G]

(M5010910) リフトブラケット

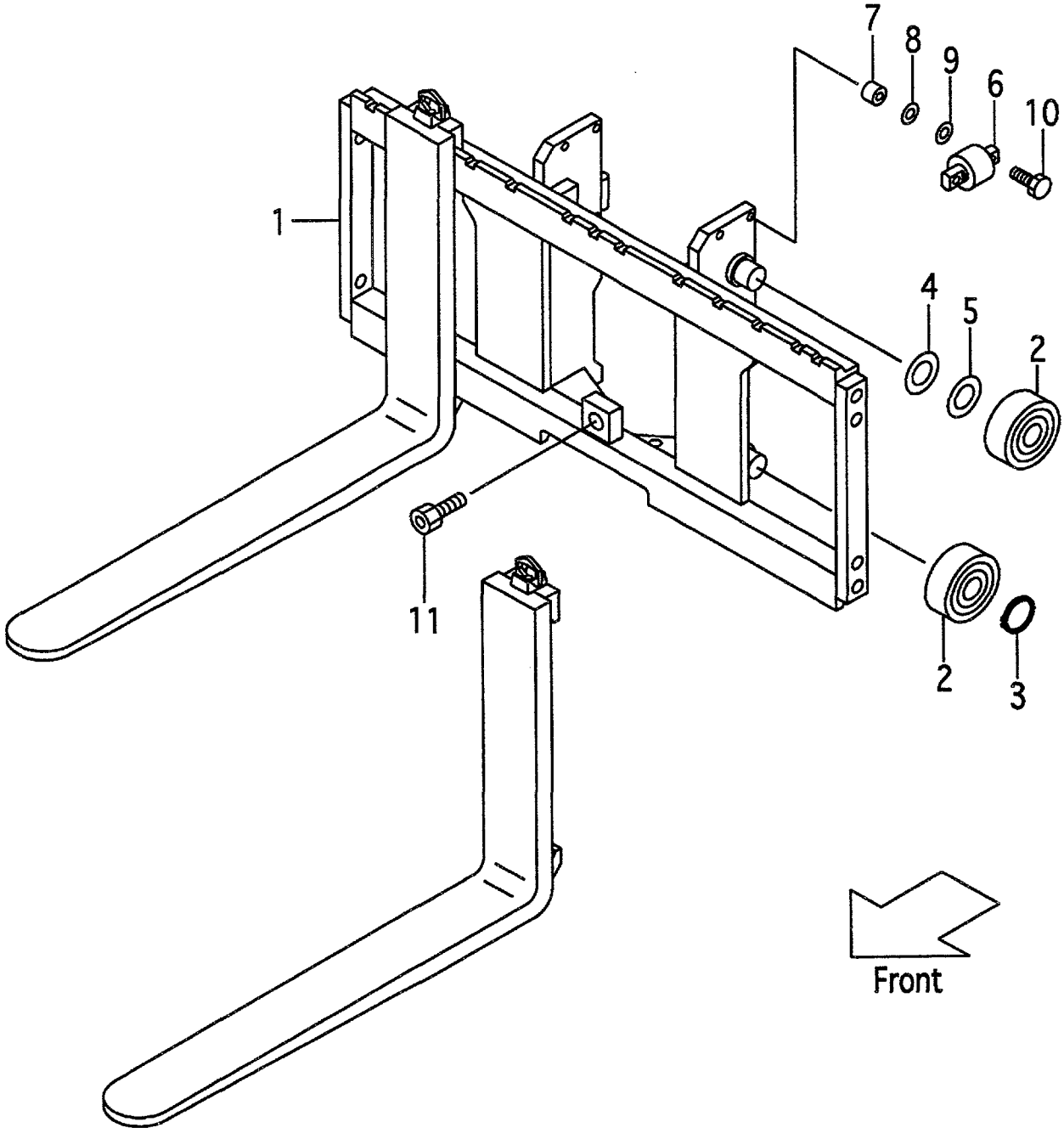

A:VFHM18G(1.0t)
B:VFHM18G(1.5t)
C:VFHM18G(1.8t)

FIG.202
(M5010910)

Item No	Part No.	Mark	Description		Req'd	Remarks : Serial No.
-	210F0-93341	+	CHART,CAPACITY	ﾁｬｰﾄ	1	C [VFHM540-750][EXA] (ENGLISH)
-	514A3-82301	+	CHART,CAPACITY	ﾁｬｰﾄ	1	[EXB][EXC][EXE][EXN] (ENGLISH)
-	514A3-82331	+	CHART,CAPACITY	ﾁｬｰﾄ	1	[EXB/SNP][EXE/SNP] (SPANISH)
-	514A3-82341	+	CHART,CAPACITY	ﾁｬｰﾄ	1	[EXB/FNP][EXE/FNP] (FRENCH)
-	63110-18921	+	CHART,CAPACITY	ﾁｬｰﾄ	1	[EXB/CNP](CHINESE)
-	514A3-82321	+	PLATE,CAPACITY	ﾌﾟﾚｰﾄ	1	[EXD](GERMAN)
-	514A3-82351	+	CHART,CAPACITY	ﾁｬｰﾄ	1	[EXEEC/ONP](DUTCH)
-	514A3-82361	+	CHART,CAPACITY	ﾁｬｰﾄ	1	[EXEEC/DNP][EXNEC/DNP] (DANISH)
-	514A3-82371	+	CHART,CAPACITY	ﾁｬｰﾄ	1	[EXEEC/INP](ITALIAN)
-	514A3-82381	+	CHART,CAPACITY	ﾁｬｰﾄ	1	[EXEEC/GNP](GREEK)
-	514A3-82391	+	CHART,CAPACITY	ﾁｬｰﾄ	1	[EXEEC/PNP](PORTUGUESE)
-	529F3-82111	+	CHART,CAPACITY	ﾁｬｰﾄ	1	[EXNEC/SENP](SWEDISH)
-	529F3-82101	+	CHART,CAPACITY	ﾁｬｰﾄ	1	[EXNEC/FINP](FINNISH)
13	02432-01008	+	RIVET	ﾘﾍﾞｯﾄ	4	

FIG.203 FORK[VFHM18G]

(M5018140) フォーク

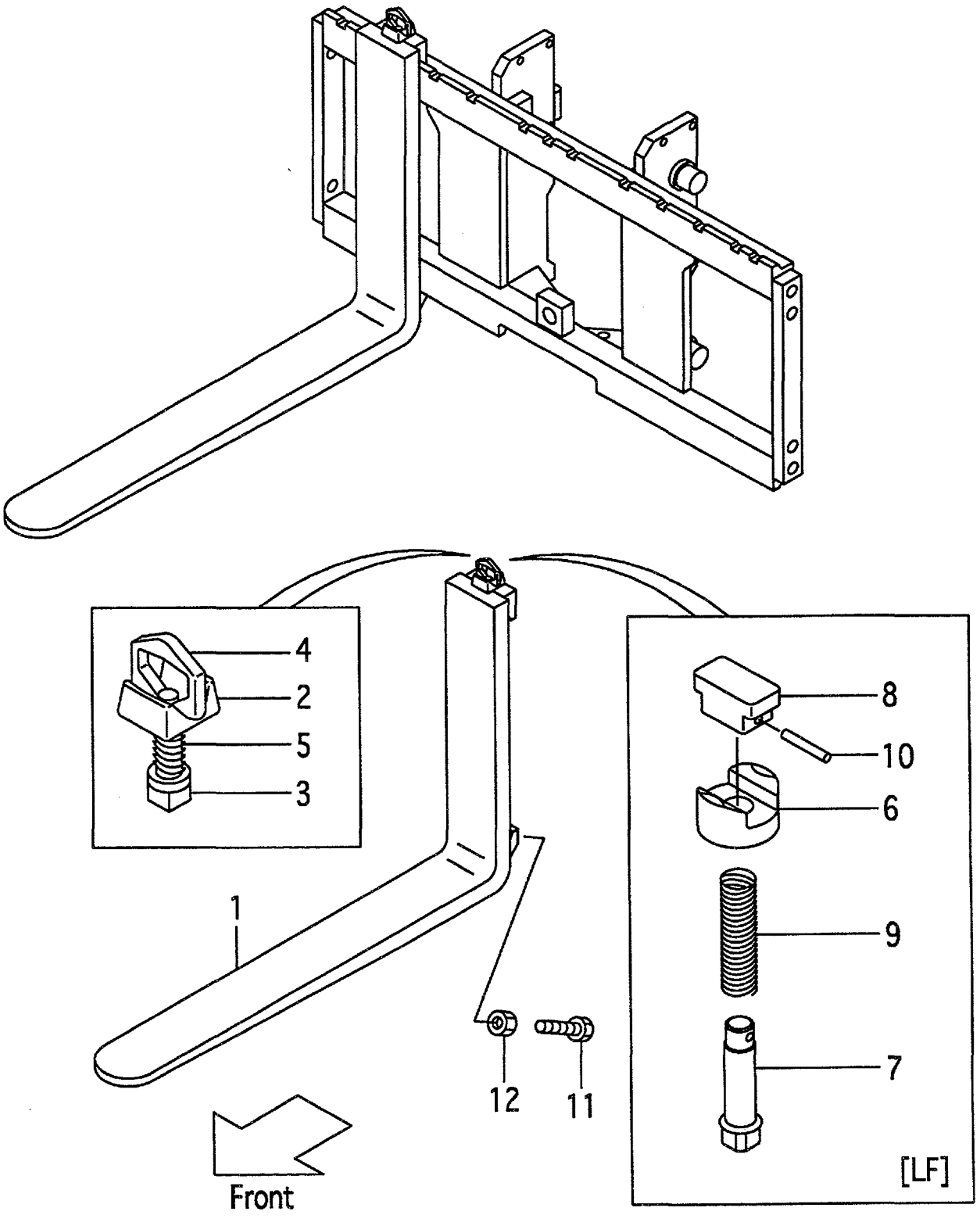

A:VFHM18G(1.0t)
B:VFHM18G(1.5t)
C:VFHM18G(1.8t)

FIG.203
(M5018140)

Item No	Part No.	Mark	Description		Req'd	Remarks : Serial No.
1	210B8-10502		FORK	ﾌｫｰｸ	2	A (L=770) INC.6-10
-	210B8-10502		FORK	ﾌｫｰｸ	2	A [LF077] INC.6-10
-	210B8-10512		FORK	ﾌｫｰｸ	2	A [LF085] INC.6-10
-	210F8-10502		FORK	ﾌｫｰｸ	2	B,C [LF085] INC.6-10
-	210F8-10572		FORK	ﾌｫｰｸ	2	[LF090] INC.6-10
-	210F8-10512		FORK	ﾌｫｰｸ	2	B,C (L=920) INC.6-10
-	210B8-10522		FORK	ﾌｫｰｸ	2	A [LF092] INC.6-10
-	210F8-10512		FORK	ﾌｫｰｸ	2	B,C [LF092] INC.6-10
-	210F8-10512		FORK	ﾌｫｰｸ	2	[EX](L=920) INC.6-10
-	210F8-10582		FORK	ﾌｫｰｸ	2	[LF100] INC.6-10
-	210F8-10522		FORK	ﾌｫｰｸ	2	[LF107] INC.6-10
-	210F8-10592		FORK	ﾌｫｰｸ	2	[LF110] INC.6-10
-	210F8-10602		FORK	ﾌｫｰｸ	2	[LF120] INC.6-10
-	210F8-10532		FORK	ﾌｫｰｸ	2	[LF122] INC.6-10
-	210H8-10612		FORK	ﾌｫｰｸ	2	[LF130] INC.6-10
-	210H8-10532		FORK	ﾌｫｰｸ	2	[LF137] INC.6-10
-	210H8-10622		FORK	ﾌｫｰｸ	2	[LF140] INC.6-10
-	210H8-10632		FORK	ﾌｫｰｸ	2	[LF150] INC.6-10
-	210H8-10542		FORK	ﾌｫｰｸ	2	[LF152] INC.6-10
-	210H8-10642		FORK	ﾌｫｰｸ	2	[LF160] INC.6-10
-	210H8-10552		FORK	ﾌｫｰｸ	2	[LF167] INC.6-10
-	216B8-10301		FORK	ﾌｫｰｸ	2	A [LFD077] INC.2-5
-	216B8-10311		FORK	ﾌｫｰｸ	2	A [LFD085] INC.2-5
-	216G8-10301		FORK	ﾌｫｰｸ	2	B [LFD085] INC.2-5
-	216K8-10361		FORK	ﾌｫｰｸ	2	C [LFD085] INC.2-5
-	216G8-10371		FORK	ﾌｫｰｸ	2	A,B [LFD090] INC.2-5
-	216K8-10371		FORK	ﾌｫｰｸ	2	C [LFD090] INC.2-5
-	216B8-10321		FORK	ﾌｫｰｸ	2	A [LFD092] INC.2-5
-	216G8-10311		FORK	ﾌｫｰｸ	2	B [LFD092] INC.2-5
-	216K8-10301		FORK	ﾌｫｰｸ	2	C [LFD092] INC.2-5
-	216G8-10381		FORK	ﾌｫｰｸ	2	A,B [LFD100] INC.2-5
-	216K8-10381		FORK	ﾌｫｰｸ	2	C [LFD100] INC.2-5

FIG.203 FORK[VFHM18G]

(M5018140) フォーク

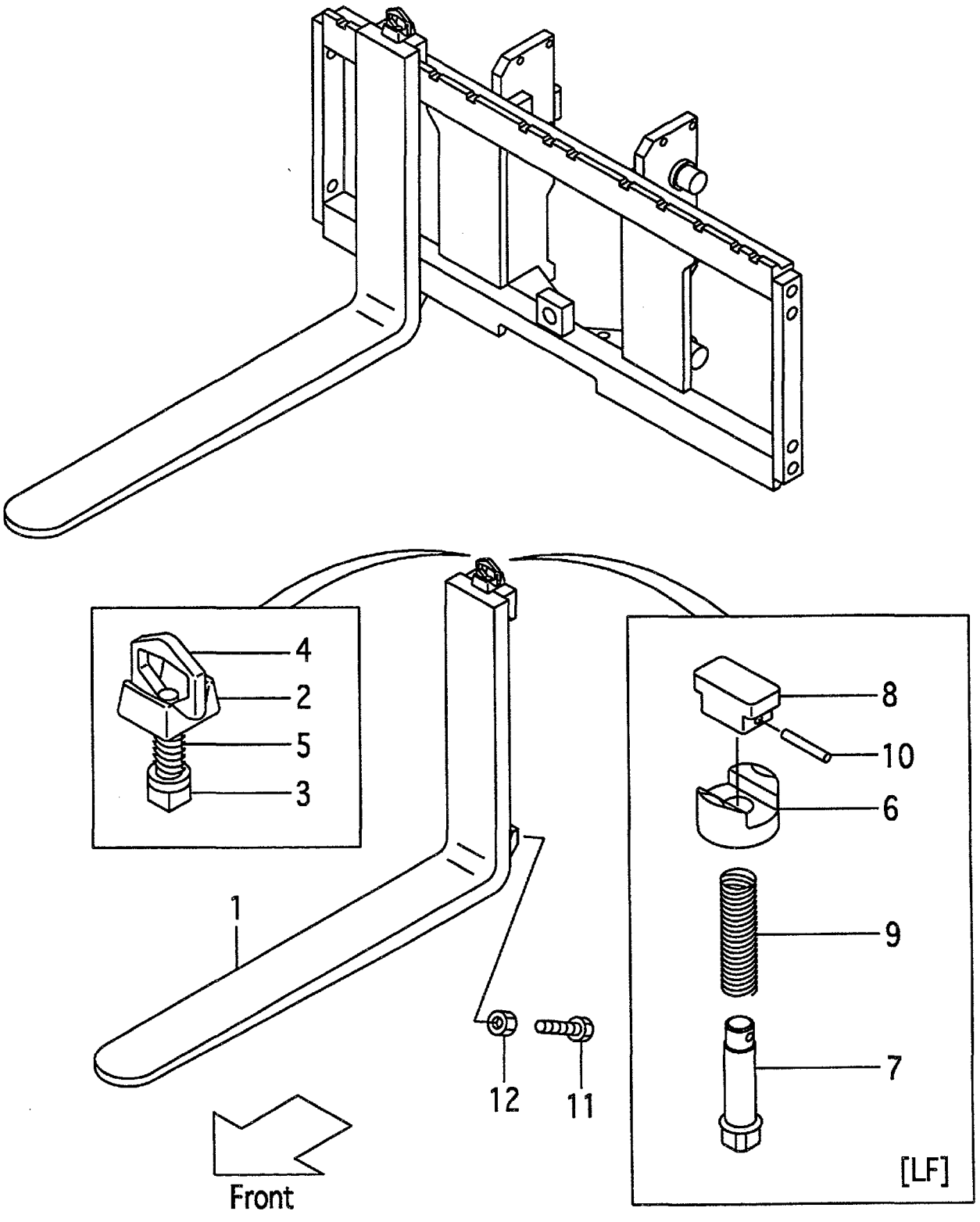

A:VFHM18G(1.0t)
B:VFHM18G(1.5t)
C:VFHM18G(1.8t)

FIG.203
(M5018140)

Item No	Part No.	Mark	Description		Req'd	Remarks : Serial No.
-	216G8-10321		FORK	ﾌｫｰｸ	2	A,B [LFD107] INC.2-5
-	216K8-10311		FORK	ﾌｫｰｸ	2	C [LFD107] INC.2-5
-	216G8-10391		FORK	ﾌｫｰｸ	2	A,B [LFD110] INC.2-5
-	216K8-10391		FORK	ﾌｫｰｸ	2	C [LFD110] INC.2-5
-	216G8-10401		FORK	ﾌｫｰｸ	2	A,B [LFD120] INC.2-5
-	216K8-10401		FORK	ﾌｫｰｸ	2	C [LFD120] INC.2-5
-	216G8-10331		FORK	ﾌｫｰｸ	2	A,B [LFD122] INC.2-5
-	216K8-10321		FORK	ﾌｫｰｸ	2	C [LFD122] INC.2-5
-	216G8-10411		FORK	ﾌｫｰｸ	2	A,B [LFD130] INC.2-5
-	216K8-10411		FORK	ﾌｫｰｸ	2	C [LFD130] INC.2-5
-	216G8-10341		FORK	ﾌｫｰｸ	2	A,B [LFD137] INC.2-5
-	216K8-10331		FORK	ﾌｫｰｸ	2	C [LFD137] INC.2-5
-	216G8-10421		FORK	ﾌｫｰｸ	2	A,B [LFD140] INC.2-5
-	216K8-10421		FORK	ﾌｫｰｸ	2	C [LFD140] INC.2-5
-	216G8-10431		FORK	ﾌｫｰｸ	2	A,B [LFD150] INC.2-5
-	216K8-10431		FORK	ﾌｫｰｸ	2	C [LFD150] INC.2-5
-	216G8-10351		FORK	ﾌｫｰｸ	2	A,B [LFD152] INC.2-5
-	216K8-10341		FORK	ﾌｫｰｸ	2	C [LFD152] INC.2-5
-	216G8-10441		FORK	ﾌｫｰｸ	2	A,B [LFD160] INC.2-5
-	216K8-10441		FORK	ﾌｫｰｸ	2	C [LFD160] INC.2-5
-	216G8-10361		FORK	ﾌｫｰｸ	2	B [LFD167] INC.2-5
-	216K8-10351		FORK	ﾌｫｰｸ	2	C [LFD167] INC.2-5
A1	214A8-11001		STOPPER-ASSY	ｽﾄｯﾊﾟｱｯｾﾝ	2	[LFD] INC.2-5
2	214A8-12001		HEAD	ﾍｯﾄﾞ	2	[LFD]
3	214A8-12011		STOPPER	ｽﾄｯﾊﾟ	2	[LFD]
4	214A8-12021		HANDLE	ﾊﾝﾄﾞﾙ	2	[LFD]
5	214A8-12031		SPRING	ｽﾌﾟﾘﾝｸﾞ	2	[LFD]
6	216G8-12921		HOLDER	ﾎﾙﾀﾞ	2	[LF]

FIG.203 FORK[VFHM18G]

(M5018140) フォーク

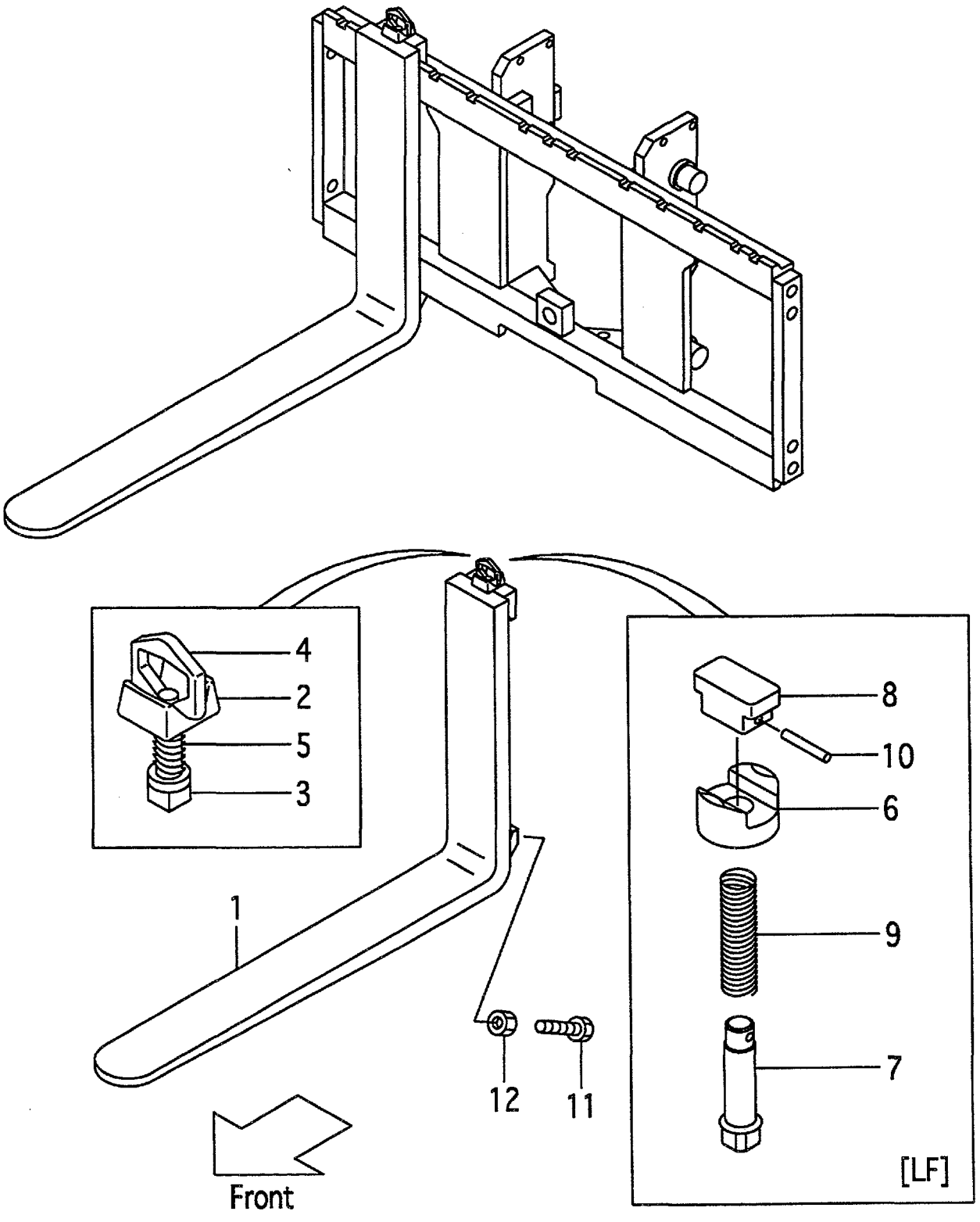

A:VFHM18G(1.0t)
B:VFHM18G(1.5t)
C:VFHM18G(1.8t)

FIG.203
(M5018140)

Item No	Part No.	Mark	Description		Req'd	Remarks : Serial No.
7	231A8-12001		PIN	ﾋﾟﾝ	2	[LF]
8	231A8-12011		KNOB	ﾉﾌﾞ	2	[LF]
9	231A8-12021		SPRING	ｽﾌﾟﾘﾝｸﾞ	2	[LF]
10	231A8-12031		PIN,SPRING	ﾋﾟﾝ	2	[LF]
11	216G8-12101		BOLT	ﾎﾞﾙﾄ	4	[LFD]
12	01402-00010		NUT	ﾅｯﾄ	4	[LFD]

FIG.204 BACKREST[VFHM18G]

(M5018260) ﾊﾞｯｸﾚｽﾄ

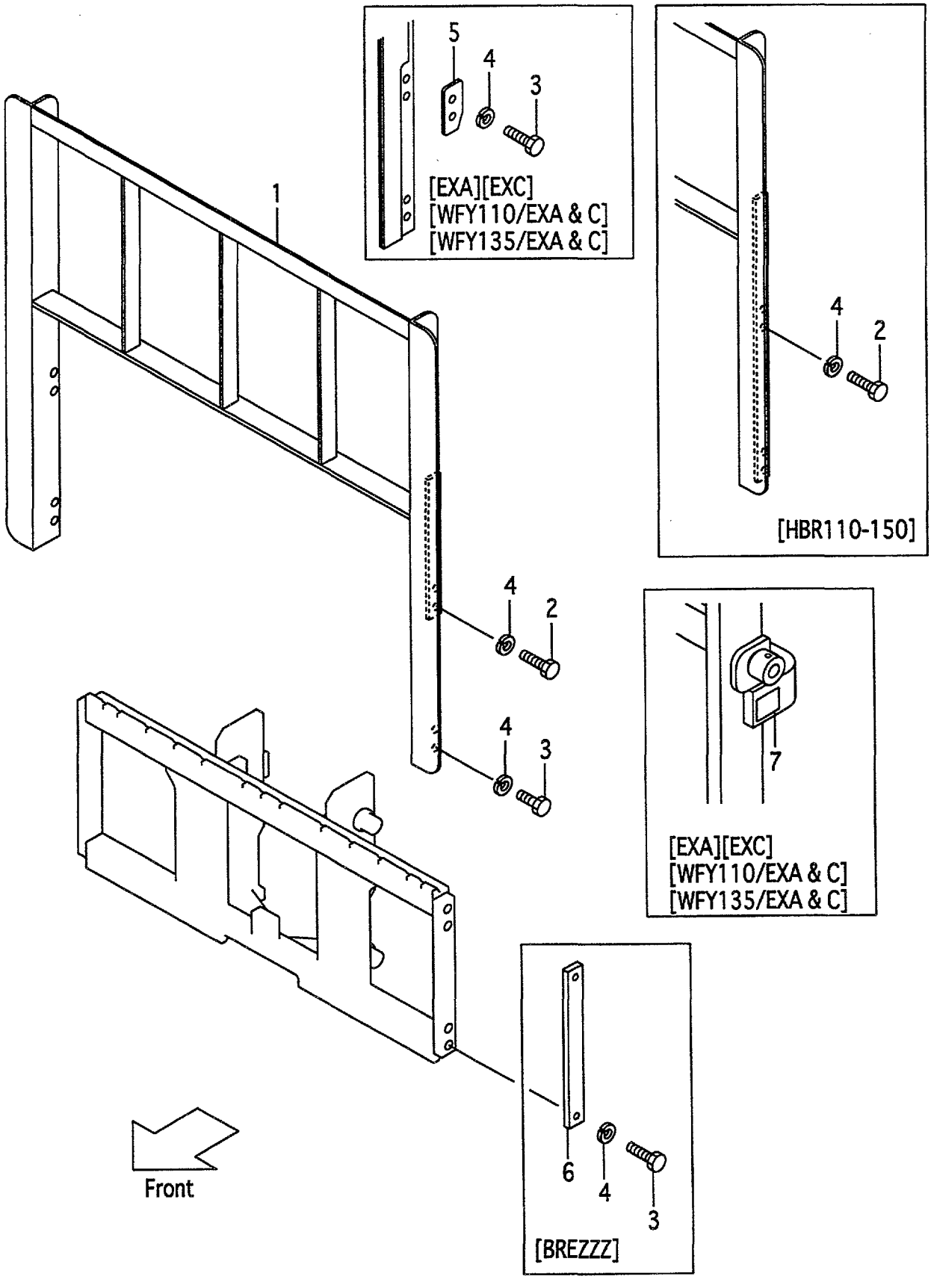

A:VFHM18G(1.0t)
B:VFHM18G(1.5t)
C:VFHM18G(1.8t)

FIG.204
(M5018260)

Item No	Part No.	Mark	Description		Req'd	Remarks : Serial No.
1	216G8-22201		BACKREST	ﾊﾞｯｸﾚｽﾄ	1	
-	516G2-74301		BACKREST	ﾊﾞｯｸﾚｽﾄ	1	[EXA][EXC][HBR048][HBR048]
-	216G8-22301		BACKREST	ﾊﾞｯｸﾚｽﾄ	1	[HBR110]
-	216G8-22311		BACKREST	ﾊﾞｯｸﾚｽﾄ	1	[HBR120]
-	216G8-22321		BACKREST	ﾊﾞｯｸﾚｽﾄ	1	[HBR130]
-	216G8-22331		BACKREST	ﾊﾞｯｸﾚｽﾄ	1	[HBR140]
-	216G8-22341		BACKREST	ﾊﾞｯｸﾚｽﾄ	1	[HBR150]
-	516G1-64301		BACKREST	ﾊﾞｯｸﾚｽﾄ	1	[WFY110]
-	516G1-64351		BACKREST	ﾊﾞｯｸﾚｽﾄ	1	[WFY135]
-	516G2-74101		BACKREST	ﾊﾞｯｸﾚｽﾄ	1	[WFY110/EXA][WFY110/EXC]
-	516G2-74201		BACKREST	ﾊﾞｯｸﾚｽﾄ	1	[WFY135/EXA][WFY135/EXC]
2	01100-14030		BOLT	ﾎﾞﾙﾄ	4	(WITHOUT BREZZZ)
-	01100-14035		BOLT	ﾎﾞﾙﾄ	4	[EXA][EXC][HBR048]
						[WFY110/EXA&C]
						[WFY135/EXA&C]
-	01100-14030		BOLT	ﾎﾞﾙﾄ	8	[HRB110-150]
3	01100-14025		BOLT	ﾎﾞﾙﾄ	4	(WITHOUT HBR110-150)
4	02010-00014		WASHER	ﾜｯｼｬ	8	
-	02010-00014		WASHER	ﾜｯｼｬ	4	[BREZZZ]
5	534A2-74051		PLATE	ﾌﾟﾚｰﾄ	2	[EXA][EXC][HBR048]
						[WFY110/EXA&C]
						[WFY135/EXA&C]
6	23659-42161		PLATE	ﾌﾟﾚｰﾄ	2	[BREZZZ]
7	534A2-74301		DECAL,CAUTION	ﾃﾞｶﾙ	1	[EXA][EXC][HBR048]
						[WFY110/EXA&C]
						[WFY135/EXA&C]

PARTS NUMBER INDEX

Part No.	Fig.No.	Part No.	Fig.No.	Part No.	Fig.No.	Part No.	Fig.No.
B-B3613-13001	63	B-21001-90408	148	B-21013-36433	146	B-23641-03716	63
B-B3613-13001	64	B-21003-30086	143	B-21013-36433	149	B-23641-03716	63
B-B6127-20412	165	B-21003-30086	144	B-21013-36434	144	B-23641-03716	64
B-B6341-01401	165	B-21003-30086	145	B-21013-36434	145	B-23641-03716	64
B-B6351-01401	165	B-21003-30086	146	B-21013-36434	146	B-23641-04303	63
B-B6527-62102	182	B-21011-30137	143	B-21013-36434	150	B-23641-04303	64
B-B6527-62102	188	B-21011-30137	144	B-21013-36434	150	B-23642-00911	63
B-B6527-62302	182	B-21011-30137	145	B-21013-36434	150	B-23642-00911	64
B-B6527-62302	188	B-21011-30137	146	B-21013-37348	143	B-23643-00296	63
B-B6527-62402	182	B-21011-30507	148	B-21013-37348	144	B-23643-00296	64
B-B6527-62402	188	B-21011-30507	150	B-21013-37348	145	B-23643-00523	63
B-B6527-62502	182	B-21011-30507	150	B-21013-37348	146	B-23643-00523	64
B-B6527-62502	188	B-21011-30507	150	B-21013-37348	147	B-23643-00526	63
B-B6527-62602	182	B-21011-30528	149	B-21013-37356	143	B-23643-00526	64
B-B6527-62602	188	B-21011-30603	148	B-21013-37356	144	B-23643-00618	63
B-B6527-62702	182	B-21011-30603	149	B-21013-37356	145	B-23643-00618	64
B-B6527-62702	188	B-21011-30603	150	B-21013-37356	146	B-23711-01922	63
B-B6527-62802	182	B-21011-30603	150	B-21013-37356	147	B-23711-01922	64
B-B6527-62802	188	B-21011-30603	150	B-21013-39701	144	B-23711-03701	63
B-B6527-63502	182	B-21011-30604	148	B-21013-39701	145	B-23711-03701	64
B-B6527-63502	188	B-21011-30604	149	B-21013-39701	146	B-30111-35008	182
B-B6527-64802	182	B-21011-30604	150	B-21013-39701	150	B-30111-35008	182
B-B6527-64802	188	B-21011-30604	150	B-21013-39701	150	B-30111-35008	188
B-B6527-65002	182	B-21011-30604	150	B-21013-39701	150	B-30111-35008	188
B-B6527-65002	188	B-21011-30618	149	B-21021-30103	144	B-30111-35012	182
B-B6527-65302	182	B-21011-30702	148	B-21021-30104	144	B-30111-35012	182
B-B6527-65302	188	B-21011-30702	149	B-21031-30103	145	B-30111-35012	182
B-B6537-88202	182	B-21011-30702	150	B-21031-30104	145	B-30111-35012	182
B-B6537-88202	188	B-21011-30702	150	B-21041-30103	146	B-30111-35012	182
B-B6537-88502	182	B-21011-30702	150	B-21041-30104	146	B-30111-35012	188
B-B6537-88502	188	B-21011-31011	148	B-21731-30306	147	B-30111-35012	188
B-B6537-88702	182	B-21011-31011	149	B-21731-30308	147	B-30111-35012	188
B-B6537-88702	188	B-21011-31011	150	B-21731-30502	147	B-30111-35012	188
B-B6537-89002	182	B-21011-31011	150	B-21731-30612	147	B-30111-35012	188
B-B6537-89002	188	B-21011-31011	150	B-21731-30613	147	B-30121-45018	182
B-B6537-89202	182	B-21011-31105	143	B-21731-30703	147	B-30121-45018	188
B-B6537-89202	188	B-21011-31106	143	B-21731-30704	147	B-30131-03003	165
B-B6537-89402	182	B-21011-31702	148	B-21731-30802	147	B-30131-35017	182
B-B6537-89402	188	B-21011-31702	149	B-21731-31201	147	B-30131-35017	188
B-B6537-89602	182	B-21011-31702	150	B-21733-40207	147	B-30131-45018	182
B-B6537-89602	188	B-21011-31702	150	B-23451-02016	63	B-30131-45018	188
B-B6537-89902	182	B-21011-31702	150	B-23451-02016	64	B-30141-35012	165
B-B6537-89902	188	B-21011-32404	148	B-23451-02106	63	B-30151-03006	165
B-B665B-00033	165	B-21011-32404	149	B-23451-02106	64	B-30161-45046	182
B-B665B-00034	165	B-21011-32404	150	B-23451-02212	63	B-30161-45046	188
B-C0003-30301	144	B-21011-32404	150	B-23451-02212	64	B-30161-91773	182
B-C0003-30301	145	B-21011-32404	150	B-23641-00313	63	B-30161-91773	188
B-C0003-30301	146	B-21011-32801	148	B-23641-00313	64	B-30191-30025	165
B-21001-00106	147	B-21011-32801	149	B-23641-01609	63	B-30191-35025	182
B-21001-00106	148	B-21011-32801	150	B-23641-01609	64	B-30191-35025	188
B-21001-00106	149	B-21011-32801	150	B-23641-01610	63	B-30311-01403	165
B-21001-00106	150	B-21011-32801	150	B-23641-01610	64	B-30421-30005	165
B-21001-00106	150	B-21013-36432	143	B-23641-02218	63	B-30431-35009	165
B-21001-00106	150	B-21013-36432	144	B-23641-02218	64	B-3045A-00020	182
B-21001-00689	148	B-21013-36432	145	B-23641-02227	63	B-3045A-00020	188
B-21001-00689	149	B-21013-36432	146	B-23641-02227	64	B-3045B-00026	182
B-21001-00689	150	B-21013-36432	148	B-23641-02508	63	B-3045B-00026	188
B-21001-00689	150	B-21013-36433	143	B-23641-02508	64	B-30461-45039	182
B-21001-00689	150	B-21013-36433	144	B-23641-03314	63	B-30461-45039	188
B-21001-01452	147	B-21013-36433	145	B-23641-03314	64	B-3065B-00139	165

PARTS NUMBER INDEX

Part No.	Fig.No.	Part No.	Fig.No.	Part No.	Fig.No.	Part No.	Fig.No.
B-3065B-00211	165	B-93128-10082	145	C-52-11201-01270	60	01100-14035	196
B-30697-49101	182	B-93128-10082	146	C-52-11204-69010	60	01100-14035	204
B-30697-49101	188	B-93364-08052	147	C-52-12504-10001	60	01100-14040	70
B-30697-49201	182	B-94101-08201	147	C-52-12504-20001	60	01100-14065	181
B-30697-49201	188	B-94101-20512	63	C-52-30780-02340	60	01100-14065	187
B-30697-49301	182	B-94101-20512	64	C-90-0527-0616	60	01100-14065	190
B-30697-49301	188	B-94721-38151	63	C-90-5522-0140	60	01100-14065	197
B-30697-49401	182	B-94721-38151	64	C-90-9200-0800	60	01100-14070	121
B-30697-49401	188	B-95111-01200	147	R-022-24238-00	141	01100-16016	191
B-30697-49501	182	B-95112-05500	165	R-022-24238-00	142	01100-16016	199
B-30697-49501	188	B-95113-01800	148	R-402-00012-12	141	01100-16016	200
B-30697-49601	182	B-95113-02400	147	R-402-00012-12	142	01100-16060	191
B-30697-49601	188	B-95121-06000	63	Z-8-94132-674-0	13	01100-16060	197
B-30697-49701	182	B-95121-06000	63	Z-8-94132-675-0	13	01100-16060	199
B-30697-49701	188	B-95121-06000	64	Z-8-94367-294-0	13	01100-16065	191
B-30697-49801	182	B-95121-06000	64	Z-8-94367-956-0	13	01100-16065	199
B-30697-49801	188	B-95121-06500	165	Z-8-94367-957-0	13	01103-08016	48
B-30697-49901	182	B-95133-00500	149	01030-04014	36	01103-08016	68
B-30697-49901	188	B-95151-06300	63	01030-04020	41	01103-08020	47
B-30697-50001	182	B-95151-06300	64	01030-05012	176	01103-08020	49
B-30697-50001	188	B-95713-05500	165	01030-05065	25	01103-08020	53
B-30697-50101	182	B-96111-10613	165	01033-05014	19	01103-08025	56
B-30697-50101	188	B-97123-01111	147	01033-05014	20	01103-08035	52
B-30697-50201	182	B-97123-02111	143	01066-08008	54	01103-08035	55
B-30697-50201	188	B-97123-02111	144	01066-10012	165	01103-08045	52
B-30697-50301	182	B-97123-02111	145	01066-10012	165	01103-08050	55
B-30697-50301	188	B-97123-02111	146	01100-05010	1	01103-08050	56
B-30697-50401	182	C-K2-11036-83012	60	01100-06012	107	01103-08055	55
B-30697-50401	188	C-K2-11036-83022	60	01100-06012	108	01103-10016	47
B-30697-50501	182	C-51-B2101-02322	60	01100-06020	41	01103-10020	191
B-30697-50501	188	C-52-10901-52264	60	01100-06055	157	01103-10020	199
B-30697-50601	182	C-52-10901-64550	60	01100-06055	158	01103-10030	48
B-30697-50601	188	C-52-10901-64560	60	01100-08020	26	01103-10030	51
B-30697-50701	182	C-52-10906-04160	60	01100-08020	27	01103-10040	55
B-30697-50701	188	C-52-10910-05150	60	01100-08020	28	01103-10050	179
B-30697-50801	182	C-52-10927-04130	60	01100-08020	29	01103-10050	185
B-30697-50801	188	C-52-11001-02310	60	01100-08020	30	01103-10050	194
B-30697-50901	182	C-52-11003-02210	60	01100-08020	43	01103-10050	51
B-30697-50901	188	C-52-11003-02380	60	01100-08020	44	01103-10055	51
B-30961-03012	165	C-52-11003-02380	60	01100-08025	106	01103-10055	55
B-30961-03512	182	C-52-11003-04010	60	01100-08050	120	01103-10060	114
B-30961-03512	188	C-52-11003-05140	60	01100-10030	112	01103-10075	51
B-91111-60102	148	C-52-11003-64530	60	01100-10030	114	01103-10097	1
B-91111-60102	149	C-52-11005-34500	60	01100-10035	59	01103-10097	2
B-91111-60102	150	C-52-11005-44500	60	01100-10050	59	01103-10120	109
B-91111-60102	150	C-52-11029-52000	60	01100-10090	175	01103-10120	110
B-91111-60102	150	C-52-11031-11001	60	01100-12020	104	01103-10120	111
B-91511-08301	147	C-52-11031-14607	60	01100-14025	180	01103-12035	182
B-91511-08351	147	C-52-11031-21001	60	01100-14025	180	01103-12035	188
B-92703-06181	148	C-52-11036-15160	60	01100-14025	186	01103-14040	192
B-92703-06181	149	C-52-11036-24606	60	01100-14025	186	01103-14040	200
B-92703-06181	150	C-52-11036-25160	60	01100-14025	196	01109-12030	128
B-92703-06181	150	C-52-11036-54070	60	01100-14025	204	01110-30090	126
B-92703-06181	150	C-52-11036-54540	60	01100-14030	180	01110-30090	127
B-93118-08652	143	C-52-11036-73002	60	01100-14030	186	01110-30150	126
B-93118-08652	144	C-52-11036-83012	60	01100-14030	196	01110-30150	127
B-93118-08652	145	C-52-11036-83022	60	01100-14030	196	01113-30160	127
B-93118-08652	146	C-52-11044-13300	60	01100-14030	204	01113-30190	127
B-93128-10082	143	C-52-11044-23300	60	01100-14030	204	01113-30230	127
B-93128-10082	144	C-52-11101-04111	60	01100-14030	96	01120-08035	109

PARTS NUMBER INDEX

Part No.	Fig.No.	Part No.	Fig.No.	Part No.	Fig.No.	Part No.	Fig.No.
01120-08035	109	01184-10025	114	01400-00006	113	01402-00010	109
01120-08035	110	01184-10025	40	01400-00006	114	01402-00010	112
01120-08035	111	01184-10025	57	01400-00006	130	01402-00010	114
01120-10030	67	01184-10030	112	01400-00006	21	01402-00010	142
01120-10030	69	01184-10030	113	01400-00006	22	01402-00010	178
01120-10035	109	01184-10030	114	01400-00006	41	01402-00010	184
01123-10045	49	01184-10030	114	01400-00006	42	01402-00010	195
01141-04012	67	01184-10030	46	01400-00006	44	01402-00010	203
01141-04012	68	01184-10030	47	01400-00008	120	01402-00010	67
01141-04012	68	01184-10035	46	01400-00008	139	01402-00010	69
01141-04012	68	01184-10035	46	01400-00008	140	01402-00014	61
01141-04012	68	01184-10035	47	01400-00008	140	01402-00014	62
01141-04012	69	01184-10040	201	01400-00008	1	01402-00020	95
01170-05045	55	01184-10040	46	01400-00008	26	01402-00020	97
01171-06025	101	01184-10050	46	01400-00008	27	01402-00022	66
01181-08016	130	01184-10050	47	01400-00008	28	01402-00022	66
01183-05010	124	01184-10050	47	01400-00008	29	01402-00022	95
01183-05010	125	01184-10055	114	01400-00008	30	01402-00022	97
01183-05012	177	01184-12025	179	01400-00008	35	01402-10010	63
01183-05012	177	01184-12025	185	01400-00008	36	01402-10010	64
01183-06012	152	01184-12025	194	01400-00008	43	01402-10012	72
01183-06012	153	01184-12025	202	01400-00008	44	01402-10012	75
01183-06012	154	01184-12030	63	01400-00008	46	01402-10012	78
01183-06012	155	01184-12030	64	01400-00008	67	01402-10012	81
01183-06016	124	01185-06016	19	01400-00008	68	01402-10016	95
01183-06016	125	01185-06016	20	01400-00008	69	01402-10016	97
01183-06016	193	01185-08016	201	01400-00010	112	01407-00022	95
01183-06016	193	01185-08016	8	01400-00010	113	01407-00022	97
01183-06016	193	01185-08016	8	01400-00010	114	01412-00024	67
01183-06016	193	01185-08016	8	01400-00010	32	01412-00024	68
01183-06016	21	01185-08016	9	01400-00010	32	01412-00024	69
01183-06016	22	01185-08016	9	01400-00010	46	01412-10016	66
01183-06025	21	01185-08016	16	01400-00010	47	01412-10016	66
01183-06025	22	01185-08016	21	01400-00010	47	01412-10016	67
01183-08016	104	01185-08016	22	01400-00010	49	01412-10016	67
01183-08016	105	01185-08016	23	01400-00010	94	01412-10016	68
01183-08016	107	01185-08016	24	01400-00012	107	01412-10016	69
01183-08016	108	01185-08016	31	01400-00012	108	01412-10016	69
01183-08016	114	01185-08016	35	01400-00014	182	01412-10016	95
01183-08016	129	01185-08020	129	01400-00014	182	01412-10016	95
01183-08016	130	01185-08020	8	01400-00014	188	01412-10016	97
01183-08016	3	01185-08020	9	01400-00014	188	01412-10016	97
01183-08016	4	01185-08020	51	01400-00014	191	01420-00006	23
01183-08016	13	01185-10030	141	01400-00014	199	01420-00006	24
01183-08016	48	01186-06012	131	01400-00014	200	02000-00004	41
01183-08016	67	01186-08025	40	01400-10012	59	02000-00005	108
01183-08016	69	01186-10020	130	01400-10012	59	02000-00005	152
01183-08022	16	01186-10020	32	01400-10012	87	02000-00005	153
01183-08025	162	01186-10030	94	01400-10012	89	02000-00005	154
01183-08040	175	01186-12025	101	01400-10012	91	02000-00005	155
01183-08045	46	01186-12025	102	01400-10012	93	02000-00005	176
01183-10025	32	01186-12025	103	01400-20008	14	02000-00006	107
01183-10050	202	01186-12030	128	01400-20008	15	02000-00006	107
01184-10016	49	01186-12035	101	01402-00008	106	02000-00006	108
01184-10016	49	01186-12045	16	01402-00008	109	02000-00006	108
01184-10020	113	01218-10025	1	01402-00008	109	02000-00006	113
01184-10020	139	01400-00004	41	01402-00008	110	02000-00006	130
01184-10020	139	01400-00006	107	01402-00008	111	02000-00008	112
01184-10020	140	01400-00006	108	01402-00008	112	02000-00008	114
01184-10020	192	01400-00006	112	01402-00008	112	02000-00008	129

PARTS NUMBER INDEX

Part No.	Fig.No.	Part No.	Fig.No.	Part No.	Fig.No.	Part No.	Fig.No.
02000-00008	130	02010-00006	41	02011-00008	55	02200-03030	188
02000-00008	140	02010-00008	120	02011-00008	56	02200-03030	188
02000-00008	182	02010-00008	139	02011-00008	68	02200-03030	191
02000-00008	188	02010-00008	140	02011-00010	109	02200-03030	199
02000-00008	1	02010-00008	140	02011-00010	110	02200-03030	200
02000-00008	14	02010-00008	182	02011-00010	111	02200-04025	107
02000-00008	15	02010-00008	188	02011-00010	191	02200-04025	108
02000-00008	67	02010-00008	1	02011-00010	199	02200-04025	113
02000-00008	68	02010-00008	14	02011-00010	47	02200-04025	114
02000-00008	68	02010-00008	15	02011-00010	51	02200-05045	67
02000-00008	69	02010-00008	36	02011-00010	59	02200-05045	68
02000-00010	112	02010-00008	46	02011-00012	72	02200-05045	69
02000-00010	113	02010-00008	67	02011-00012	75	02200-16010	107
02000-00010	114	02010-00008	68	02011-00012	78	02200-16010	108
02000-00010	129	02010-00008	69	02011-00012	81	02200-16010	152
02000-00010	142	02010-00010	114	02011-00012	87	02200-16010	153
02000-00010	182	02010-00010	142	02011-00012	89	02200-16010	154
02000-00010	188	02010-00010	48	02011-00012	91	02200-16010	155
02000-00010	10	02010-00010	55	02011-00012	93	02200-32020	114
02000-00010	14	02010-00012	104	02011-00014	192	02200-32025	112
02000-00010	15	02010-00014	121	02011-00014	200	02200-32025	113
02000-00010	94	02010-00014	180	02013-00012	128	02200-32025	114
02000-00012	59	02010-00014	180	02100-00012	56	02200-32032	66
02000-00012	61	02010-00014	181	02100-00020	65	02200-32032	66
02000-00016	107	02010-00014	186	02100-00022	49	02200-32032	67
02000-00016	108	02010-00014	186	02100-00025	48	02200-32032	67
02000-00016	113	02010-00014	187	02100-00025	50	02200-32032	68
02000-00016	114	02010-00014	190	02100-00030	50	02200-32032	69
02000-00016	191	02010-00014	196	02100-00035	182	02200-32032	69
02000-00016	191	02010-00014	196	02100-00035	182	02200-32032	95
02000-00016	197	02010-00014	197	02100-00035	188	02200-32032	95
02000-00016	199	02010-00014	204	02100-00035	188	02200-32032	97
02000-00016	199	02010-00014	204	02100-00035	191	02200-32032	97
02000-00016	200	02010-00014	70	02100-00035	194	02212-06016	52
02000-00024	48	02010-00014	96	02100-00035	199	02212-06016	55
02000-00024	67	02010-00016	191	02100-00035	202	02212-08020	59
02000-00024	68	02010-00016	191	02100-00035	50	02212-10020	96
02000-00024	69	02010-00016	197	02100-00035	53	02212-12020	48
02000-20010	128	02010-00016	199	02100-00038	50	02212-12020	51
02000-20010	131	02010-00016	199	02100-00040	191	02242-06055	58
02000-20010	175	02010-00016	200	02100-00040	199	02262-06015	107
02000-20010	192	02010-00030	126	02100-00040	200	02262-06015	108
02000-20010	192	02010-00030	127	02100-00040	54	02262-06025	113
02000-20010	200	02010-10004	67	02110-00018	183	02262-08020	114
02001-00012	128	02010-10004	68	02110-00018	189	02262-08025	112
02002-00010	109	02010-10004	68	02110-00018	193	02262-10030	112
02002-00010	110	02010-10004	68	02110-00018	201	02262-10030	113
02002-00010	111	02010-10004	68	02110-00024	53	02262-10030	114
02003-20010	51	02010-10004	69	02110-00024	54	02270-01014	183
02010-00004	36	02010-20010	192	02110-00028	56	02270-01014	189
02010-00004	41	02010-20010	192	02110-00030	56	02270-01014	193
02010-00005	176	02010-20010	200	02110-00037	65	02270-01014	201
02010-00005	1	02010-20012	181	02110-00047	50	02270-04035	55
02010-00006	107	02010-20012	187	02110-00062	96	02270-04040	55
02010-00006	108	02010-20012	190	02110-00072	50	02360-05019	49
02010-00006	130	02010-20012	197	02110-00080	50	02432-01008	167
02010-00006	157	02011-00008	47	02200-02016	114	02432-01008	202
02010-00006	158	02011-00008	48	02200-02020	112	03000-06005	50
02010-00006	23	02011-00008	49	02200-03030	182	03000-06206	54
02010-00006	24	02011-00008	53	02200-03030	182	03000-06206	54

PARTS NUMBER INDEX

Part No.	Fig.No.	Part No.	Fig.No.	Part No.	Fig.No.	Part No.	Fig.No.
03000-06207	50	03320-00340	200	04710-04140	183	04901-00100	165
03000-06207	53	03340-00140	141	04710-04140	189	04901-00100	181
03000-06207	54	03350-00450	95	04710-04140	189	04901-00100	187
03000-06211	58	03350-00450	97	04710-04150	183	04901-00100	190
03006-06207	50	04134-00404	201	04710-04150	189	04901-00100	197
03010-06904	65	04134-20404	157	04710-04155	160	04901-00100	48
03071-30206	67	04134-20404	158	04710-04155	183	04901-00160	48
03071-30206	68	04134-20404	201	04710-04155	189	04901-00160	67
03071-30206	69	04138-00303	34	04710-04160	183	04901-00160	68
03071-30213	59	04150-20202	114	04710-04160	183	04901-00160	69
03190-00006	192	04150-20404	142	04710-04160	183	04901-00191	67
03190-00008	50	04601-44230	201	04710-04160	189	04901-00191	68
03190-00013	49	04601-44255	201	04710-04160	189	04901-00191	69
03192-00005	50	04601-44280	201	04710-04160	189	04911-00018	157
03192-00012	59	04601-44309	201	04710-04165	183	04911-00018	158
03192-10005	50	04601-44329	201	04710-04165	183	04911-00018	183
03192-10012	59	04601-44353	201	04710-04165	189	04911-00018	183
03211-02501	50	04601-44361	201	04710-04165	189	04911-00018	189
03300-00160	49	04601-44397	201	04710-04175	183	04911-00018	189
03300-00180	49	04601-44440	201	04710-04175	189	04911-00018	201
03300-00280	183	04601-44483	201	04710-04180	183	04911-00018	201
03300-00280	189	04601-44516	201	04710-04180	189	04911-00018	201
03300-00280	193	04691-02065	157	04710-04190	183	04911-00020	159
03300-00280	201	04691-02065	158	04710-04190	183	04911-00020	160
03300-00360	50	04691-04045	157	04710-04190	189	04911-00020	161
03300-10220	50	04691-04045	158	04710-04190	189	04911-00021	157
03310-00300	49	04691-04046	157	04710-04195	183	04911-00021	158
03310-00700	57	04691-04046	158	04710-04195	189	04911-00021	159
03320-00110	114	04691-04066	201	04710-04205	183	04911-00021	160
03320-00110	96	04691-04092	157	04710-04205	183	04911-00021	161
03320-00140	151	04691-04092	158	04710-04205	189	04911-00021	183
03320-00140	157	04691-04105	157	04710-04205	189	04911-00021	183
03320-00140	158	04691-04105	158	04710-04215	183	04911-00021	189
03320-00140	183	04710-04005	123	04710-04215	183	04911-00021	189
03320-00140	183	04710-04050	157	04710-04215	183	04911-00021	201
03320-00140	189	04710-04050	158	04710-04215	183	04911-00021	201
03320-00140	189	04710-04075	183	04710-04215	189	04911-00022	33
03320-00140	193	04710-04075	189	04710-04215	189	04911-00022	34
03320-00140	193	04710-04085	183	04710-04215	189	04911-00044	157
03320-00140	193	04710-04085	189	04710-04215	189	04911-00044	158
03320-00140	201	04710-04100	183	04710-04230	183	04911-00044	9
03320-00140	201	04710-04100	189	04710-04230	189	04911-00046	157
03320-00180	141	04710-04105	157	04710-04235	183	04911-00046	158
03320-00180	142	04710-04105	158	04710-04235	189	04911-00046	8
03320-00180	151	04710-04110	183	04710-04245	183	04911-00046	9
03320-00180	151	04710-04110	183	04710-04245	189	04911-00055	6
03320-00180	151	04710-04110	183	04710-04260	183	04911-00060	5
03320-00180	157	04710-04110	189	04710-04260	183	04911-00060	6
03320-00180	158	04710-04110	189	04710-04260	189	04911-00060	12
03320-00180	183	04710-04110	189	04710-04260	189	04911-00060	13
03320-00180	189	04710-04110	201	04710-04270	183	04911-00065	5
03320-00180	192	04710-04125	183	04710-04270	189	04911-00065	6
03320-00180	193	04710-04125	189	04710-04285	183	04911-00090	7
03320-00180	201	04710-04130	183	04710-04285	183	04913-10100	19
03320-00180	201	04710-04130	189	04710-04285	189	04913-10100	20
03320-00240	193	04710-04135	183	04710-04285	189	04913-10200	159
03320-00240	201	04710-04135	189	04710-04315	183	04913-10200	161
03320-00290	141	04710-04140	159	04710-04315	189	04913-10200	19
03320-00290	142	04710-04140	161	04710-04340	183	04913-10200	20
03320-00340	192	04710-04140	183	04710-04340	189	04913-10200	21

PARTS NUMBER INDEX

Part No.	Fig.No.	Part No.	Fig.No.	Part No.	Fig.No.	Part No.	Fig.No.
04913-10200	41	06006-65010	85	06731-00070	83	09001-08071	188
04913-11100	19	06006-65010	85	06731-00120	85	09001-08071	191
04913-11100	20	06007-45012	83	06802-50008	91	09001-08071	199
04913-11120	26	06007-50008	89	06802-50008	91	09001-08075	182
04913-11200	113	06007-50008	90	06802-65010	78	09001-08075	188
04913-11200	114	06007-65010	75	06805-50008	92	09001-08075	191
04913-11200	115	06007-65010	76	06805-65010	79	09001-08075	191
04913-11200	19	06007-65010	77	06806-45012	84	09001-08075	200
04913-11200	20	06007-65010	85	06806-50008	91	09001-08077	182
04913-11200	33	06007-65010	85	06806-50008	91	09001-08077	188
04913-11200	34	06009-65010	72	06806-50008	92	09001-08077	191
04913-11200	63	06009-65010	74	06806-65010	78	09001-08077	199
04913-11200	64	06009-65010	75	06806-65010	79	09001-08079	199
04913-11200	65	06009-65010	77	06806-65010	80	09001-08079	200
04913-11380	104	06701-45012	83	06806-65010	86	09001-08081	182
04913-11380	160	06701-50008	87	06806-65010	86	09001-08081	188
04913-20380	163	06701-50008	88	06841-45012	84	09001-08083	182
04913-20380	164	06701-50008	89	06841-50008	91	09001-08083	188
04913-21380	183	06701-50008	90	06841-65010	78	09001-08083	191
04913-21380	189	06701-65010	72	06841-65010	79	09001-08083	200
04913-21380	201	06701-65010	72	06841-65010	86	09001-08085	182
04914-00016	183	06701-65010	73	06841-65010	86	09001-08085	182
04914-00016	189	06701-65010	74	06843-45012	84	09001-08085	188
04914-00016	201	06701-65010	74	06843-50008	91	09001-08085	188
04914-00019	123	06701-65010	75	06843-65010	78	09001-08085	199
04914-00019	193	06701-65010	75	06843-65010	79	09001-08085	200
06001-45012	83	06701-65010	75	06843-65010	86	09001-08089	191
06001-50008	89	06701-65010	76	06843-65010	86	09001-08093	182
06001-50008	90	06701-65010	77	06851-45012	84	09001-08093	188
06001-65010	75	06701-65010	77	06851-50008	91	09001-08093	191
06001-65010	75	06701-65010	77	06853-65010	78	09001-08093	199
06001-65010	76	06701-65010	85	06853-65010	79	09001-08093	200
06001-65010	77	06701-65010	85	06853-65010	86	09001-08097	182
06001-65010	77	06702-65010	72	06853-65010	86	09001-08097	188
06001-65010	85	06702-65010	74	09001-08043	191	09001-08099	191
06001-65010	85	06702-65010	75	09001-08047	191	09001-08101	200
06002-45012	83	06702-65010	77	09001-08051	182	09001-08103	182
06002-65010	75	06711-45012	83	09001-08051	188	09001-08103	188
06002-65010	77	06711-50008	87	09001-08051	199	09001-08103	191
06005-50008	89	06711-50008	88	09001-08053	191	09001-08103	199
06005-50008	90	06711-50008	89	09001-08055	182	09001-08107	182
06005-65010	75	06711-50008	90	09001-08055	188	09001-08107	188
06005-65010	76	06711-65010	72	09001-08055	191	09001-08109	199
06005-65010	77	06711-65010	72	09001-08057	191	09001-08109	200
06005-65010	85	06711-65010	73	09001-08057	199	09001-08113	182
06005-65010	85	06711-65010	74	09001-08059	200	09001-08113	188
06006-50008	87	06711-65010	74	09001-08061	182	09001-08115	191
06006-50008	88	06711-65010	75	09001-08061	188	09001-08117	200
06006-50008	89	06711-65010	75	09001-08061	191	09001-08123	182
06006-50008	90	06711-65010	75	09001-08061	199	09001-08123	188
06006-65010	72	06711-65010	76	09001-08065	182	09001-08125	191
06006-65010	72	06711-65010	77	09001-08065	182	09001-08133	182
06006-65010	73	06711-65010	77	09001-08065	188	09001-08133	188
06006-65010	74	06711-65010	77	09001-08065	188	09192-30035	181
06006-65010	74	06711-65010	85	09001-08065	200	09192-30035	181
06006-65010	75	06711-65010	85	09001-08067	191	09192-30035	187
06006-65010	75	06712-65010	72	09001-08067	191	09192-30035	187
06006-65010	76	06712-65010	74	09001-08067	199	09192-30035	190
06006-65010	77	06712-65010	75	09001-08069	200	09192-30035	197
06006-65010	77	06712-65010	77	09001-08071	182	09192-30035	197

PARTS NUMBER INDEX

Part No.	Fig.No.	Part No.	Fig.No.	Part No.	Fig.No.	Part No.	Fig.No.
10113-40161	50	118H3-82211	56	12163-82331	55	15573-42001	50
10113-40171	50	118H3-82221	56	12163-82341	55	15573-42011	50
10113-40521	50	118H3-82231	56	12163-82421	55	15573-42021	50
10113-40541	50	118H3-89811	55	12163-82501	53	15573-42031	50
10113-50112	58	120A3-10301	48	12163-82511	53	15573-42041	50
10193-50032	58	12003-12021	48	12163-82521	53	15573-42051	50
110F3-40202	49	12003-22011	57	12163-82541	49	15573-42061	50
110F3-52001	58	12003-22041	57	12163-82541	51	15573-42081	50
110F3-52011	58	12003-22051	57	12163-82541	53	15573-42091	50
110F7-10232	141	12003-42021	49	12163-82561	52	15573-42102	49
110F7-12001	141	12003-42031	49	12163-82561	52	15573-42112	49
110F7-12001	142	12003-42052	49	12163-82571	53	15573-42151	49
110G3-82001	54	12003-42061	49	12163-82581	53	15573-42151	59
110G7-10231	142	12003-42091	50	12163-82591	53	15583-80221	52
11153-40041	50	12003-42111	50	12163-82621	51	15583-80231	53
11243-80201	54	12003-42131	50	12193-50011	58	15583-82141	52
11243-80211	54	12003-42142	50	123S3-82091	54	15583-82151	52
11243-80221	54	12003-42241	50	123S3-82111	54	15583-82161	52
11243-82051	54	12003-42251	50	124G3-12011	48	15583-82172	52
11243-82061	54	12003-42261	50	124G3-42031	50	15583-82181	52
11243-82081	54	12003-42271	50	124G3-42041	50	15583-82192	52
11243-82091	54	12003-42281	50	124G3-42111	49	15583-82201	52
11243-82101	54	12003-42291	50	124S3-80301	51	15583-82211	52
11243-82141	54	12003-42311	50	127A3-12001	48	15583-82221	52
11243-82161	54	12003-42321	50	127A3-42011	49	15583-82231	52
11243-82171	54	12003-42331	50	127A3-42101	50	15583-82241	52
11243-82181	54	12003-42341	50	127A3-42111	50	15583-82251	52
11243-82201	54	12003-42361	50	127A3-42121	50	15583-82402	55
11243-82211	54	12003-42381	50	127M3-82102	51	15583-82411	55
11243-82501	51	12003-42391	50	127M3-82151	53	15583-82421	55
11243-82531	55	12003-42421	49	129F3-12041	48	15583-82431	55
11243-82621	53	12003-42451	49	131M2-52001	51	15583-82441	55
113A3-12001	48	12003-42461	49	135L3-82001	55	15583-82451	55
114A3-10501	48	12003-42481	50	13683-82022	51	15583-82461	55
114A3-12012	48	12003-42521	49	139B3-82151	55	15583-82471	55
115G3-82141	55	12003-42531	50	139B3-82161	55	15583-82521	51
115G3-82491	56	12003-42541	50	14243-82011	53	15583-82531	53
115G3-82512	56	12003-42551	50	14354-12211	63	15583-82541	53
115G3-82522	56	12003-43001	50	14354-12211	64	15583-82551	53
116G2-50001	46	12003-43011	57	14354-12221	63	15583-82571	55
116G2-50041	46	12003-43021	53	14354-12221	64	15583-82601	58
116G2-50201	46	12003-43021	67	14354-12251	63	15583-82621	54
116G2-50401	46	12003-43021	68	14354-12251	64	15583-82681	96
116G3-22001	49	12003-43021	69	14354-12261	63	15583-82691	96
116G3-22001	53	12003-43031	50	14354-12261	64	15604-10202	65
116G3-42201	50	12003-43031	53	14354-12271	61	15793-82321	56
116G3-42211	50	12083-22031	57	14354-12271	62	15793-82341	56
116H3-80231	53	12083-42301	50	14354-12321	63	15793-82861	56
116H3-80351	55	12163-42201	54	14354-12321	64	15943-82651	56
116H3-82101	51	12163-42211	54	15413-22011	49	15943-82661	56
116H3-82101	55	12163-42231	53	15413-22011	53	16402-54331	38
116H3-82201	55	12163-82121	53	15413-22081	57	16402-54331	42
116H3-82201	56	12163-82131	53	15413-22091	57	16402-54331	43
116H3-82301	55	12163-82151	53	15413-22101	57	16402-54331	44
116H3-82302	55	12163-82191	53	15413-52081	58	16402-54331	53
116H3-82361	55	12163-82221	53	15413-52091	58	17243-53002	58
116W3-40201	49	12163-82232	53	15413-52101	58	20113-40251	50
118H2-50001	47	12163-82302	55	15533-10301	48	20113-50181	58
118H3-80401	56	12163-82311	55	15573-40201	50	20113-51181	58
118H3-82201	56	12163-82321	55	15573-40241	50	20113-52181	58

PARTS NUMBER INDEX

Part No.	Fig.No.	Part No.	Fig.No.	Part No.	Fig.No.	Part No.	Fig.No.
20113-53181	58	210F0-60221	193	210F8-10512	195	210H8-10642	195
20114-30081	67	210F0-60231	193	210F8-10512	195	210H8-10642	203
20114-30081	68	210F0-60241	193	210F8-10512	195	211F0-50101	191
20114-30081	69	210F0-60251	193	210F8-10512	203	211F0-50101	199
20114-30091	67	210F0-60261	193	210F8-10512	203	211F0-50111	191
20114-30091	67	210F0-60271	193	210F8-10512	203	211F0-50121	191
20114-30091	68	210F0-60281	193	210F8-10522	178	211F0-50131	191
20114-30091	69	210F0-60291	193	210F8-10522	184	211F0-50131	199
20114-30091	69	210F0-60301	193	210F8-10522	195	211F0-50141	191
20224-30061	67	210F0-60311	193	210F8-10522	203	211F0-50151	191
20224-30061	69	210F0-60321	193	210F8-10532	178	211F0-50151	199
20319-20041	174	210F0-60331	193	210F8-10532	184	211F0-50161	191
205A2-63311	41	210F0-60341	193	210F8-10532	195	211F0-50171	191
20712-40275	21	210F0-60351	193	210F8-10532	203	211F0-50171	199
20712-40275	22	210F0-60361	193	210F8-10572	178	211F0-50181	191
20801-02141	13	210F0-60371	193	210F8-10572	184	211F0-50181	199
20802-51301	163	210F0-60381	193	210F8-10572	195	211F0-50191	191
20802-51301	164	210F0-81261	199	210F8-10572	203	211F0-50201	191
20803-71081	60	210F0-81281	199	210F8-10582	178	211F0-50211	191
209K2-40501	20	210F0-81291	199	210F8-10582	184	211F0-50211	199
209K2-43001	19	210F0-81301	199	210F8-10582	195	211F0-50221	191
209K2-43001	20	210F0-93001	202	210F8-10582	203	211F0-50231	191
209K4-10601	62	210F0-93011	202	210F8-10592	178	211F0-50241	191
209K4-10801	61	210F0-93031	202	210F8-10592	184	211F0-50251	191
209K4-10801	62	210F0-93041	202	210F8-10592	195	211F0-50261	191
209K4-12301	62	210F0-93201	202	210F8-10592	203	211F0-50271	191
209K4-12501	61	210F0-93211	202	210F8-10602	178	211F0-50281	191
209K4-12501	62	210F0-93231	202	210F8-10602	184	211F0-50301	191
209K4-12511	61	210F0-93241	202	210F8-10602	195	211F0-50301	199
209K4-12511	62	210F0-93301	202	210F8-10602	203	211F0-50311	191
209K4-12521	61	210F0-93311	202	210F8-10612	195	211F0-50321	191
209K4-12521	62	210F0-93331	202	210F8-42631	192	211F0-50331	191
209K4-12531	61	210F0-93341	202	210F8-43031	183	211F0-50331	199
209K4-12531	62	210F2-42011	25	210F8-43031	189	211F0-50341	191
209K4-12541	61	210F2-42021	25	210F8-43031	193	211F0-50351	191
209K4-12541	62	210F2-42031	25	210H8-10532	178	211F0-50351	199
209K4-12561	61	210F2-42201	25	210H8-10532	184	211F0-50361	191
209K4-12561	62	210F2-42211	25	210H8-10532	195	211F0-50371	191
209P6-40401	129	210F2-42221	25	210H8-10532	203	211F0-50371	199
209P6-42831	11	210F2-42231	25	210H8-10542	178	211F0-50381	191
209P7-42161	131	210F3-72001	60	210H8-10542	184	211F0-50381	199
210B8-10502	178	210F6-12441	121	210H8-10542	195	211F0-50391	191
210B8-10502	178	210F6-12441	181	210H8-10542	203	211F0-50401	191
210B8-10502	195	210F6-12441	187	210H8-10552	178	211F0-50411	191
210B8-10502	195	210F6-12441	190	210H8-10552	184	211F0-50411	199
210B8-10502	203	210F6-12441	197	210H8-10552	195	211F0-50421	191
210B8-10502	203	210F8-02102	181	210H8-10552	203	211F0-50431	191
210B8-10512	178	210F8-02102	187	210H8-10612	178	211F0-50441	191
210B8-10512	195	210F8-02102	190	210H8-10612	184	211F0-50451	191
210B8-10512	203	210F8-02102	197	210H8-10612	203	211F0-50461	191
210B8-10522	178	210F8-10502	178	210H8-10622	178	211F0-50471	191
210B8-10522	195	210F8-10502	184	210H8-10622	184	211F0-50481	191
210B8-10522	203	210F8-10502	195	210H8-10622	195	211F0-51501	192
210F0-50511	191	210F8-10502	203	210H8-10622	203	211F0-51511	192
210F0-50521	191	210F8-10512	178	210H8-10632	178	211F0-51521	192
210F0-53691	192	210F8-10512	178	210H8-10632	184	211F0-51531	192
210F0-53701	192	210F8-10512	178	210H8-10632	195	211F0-51541	192
210F0-53701	192	210F8-10512	184	210H8-10632	203	211F0-51551	192
210F0-60201	193	210F8-10512	184	210H8-10642	178	211F0-51561	192
210F0-60211	193	210F8-10512	184	210H8-10642	184	211F0-51571	192

PARTS NUMBER INDEX

Part No.	Fig.No.	Part No.	Fig.No.	Part No.	Fig.No.	Part No.	Fig.No.
211F0-51581	192	211F8-22211	185	21152-42013	22	214A3-02001	60
211F0-51591	192	211F8-22211	194	21152-42021	22	214A4-12161	61
211F0-51601	192	211F8-22211	202	21152-42091	21	214A4-12161	62
211F0-51611	192	211F8-22221	181	21159-12501	168	214A5-22001	107
211F0-51621	192	211F8-22221	187	212T2-42311	23	214A5-22001	108
211F0-51631	192	211F8-22221	187	21232-32551	14	214A5-22051	107
211F0-51641	192	211F8-22221	190	21232-32551	15	214A5-22051	108
211F0-51651	192	211F8-22221	190	21237-52051	121	214A5-32101	112
211F0-51661	192	211F8-22221	197	21237-52051	121	214A5-32312	112
211F0-51671	192	211F8-22221	197	21237-52062	121	214A5-33012	112
211F0-51681	192	211F8-22221	197	21237-52062	121	214A5-33031	112
211F0-51701	192	211F8-22231	181	21239-12501	168	214A5-33041	112
211F0-51711	192	211F8-22231	187	21279-12001	167	214A5-33052	112
211F0-51721	192	211F8-22231	187	21279-12011	167	214A5-33062	112
211F0-51731	192	211F8-22231	190	213T1-02011	3	214A5-52121	120
211F0-51741	192	211F8-22231	190	213T1-02011	4	214A5-52131	120
211F0-51751	192	211F8-22231	197	213T1-02021	3	214A5-52241	120
211F0-51761	192	211F8-22231	197	213T1-02021	4	214A5-53012	168
211F0-51771	192	211F8-22231	197	214A0-53681	192	214A6-42252	128
211F0-51781	192	211F8-22261	179	214A0-62151	193	214A6-42252	132
211F0-51791	192	211F8-22261	179	214A0-72701	197	214A6-42252	133
211F0-51801	192	211F8-22261	181	214A0-82831	191	214A6-42252	133
211F0-51811	192	211F8-22261	181	214A0-82831	199	214A6-42252	133
211F0-51821	192	211F8-22261	181	214A1-02111	1	214A6-42252	133
211F0-51831	192	211F8-22261	185	214A1-02111	2	214A6-42252	133
211F0-51841	192	211F8-22261	185	214A1-02121	1	214A6-42252	134
211F0-51851	192	211F8-22261	187	214A1-02121	2	214A6-42252	135
211F0-51861	192	211F8-22261	187	214A2-12001	10	214A6-42361	136
211F0-51871	192	211F8-22261	187	214A2-12011	10	214A6-42361	136
211F0-51881	192	211F8-22261	190	214A2-12021	10	214A6-42361	137
211F0-62301	193	211F8-22261	190	214A2-12111	10	214A6-42771	135
211F0-70302	197	211F8-22261	194	214A2-12121	10	214A6-42771	136
211F0-70312	197	211F8-22261	197	214A2-12141	10	214A6-42771	136
211F0-70322	197	211F8-22261	197	214A2-13001	10	214A6-42771	137
211F0-70332	197	211F8-22261	197	214A2-13011	10	214A6-42771	19
211F0-70342	197	211F8-22261	202	214A2-40203	25	214A6-42771	20
211F0-70352	197	211F8-22271	179	214A2-42331	114	214A6-42911	131
211F0-70362	197	211F8-22271	179	214A2-42331	8	214A7-42071	107
211F0-70372	197	211F8-22271	181	214A2-42331	23	214A7-42071	108
211F0-70382	197	211F8-22271	181	214A2-42331	24	214A7-42071	152
211F0-70392	197	211F8-22271	181	214A2-42371	39	214A7-42071	152
211F0-70402	197	211F8-22271	185	214A2-42611	10	214A7-42071	153
211F0-80161	199	211F8-22271	185	214A2-42611	13	214A7-42071	153
211F0-80171	199	211F8-22271	187	214A2-42611	21	214A7-42071	153
211F0-80181	199	211F8-22271	187	214A2-42611	22	214A7-42071	154
211F0-80191	199	211F8-22271	187	214A2-42611	27	214A7-42071	154
211F0-80201	199	211F8-22271	190	214A2-42611	28	214A7-42071	154
211F0-80361	199	211F8-22271	190	214A2-42611	29	214A7-42071	154
211F0-80371	199	211F8-22271	194	214A2-42611	30	214A7-42071	155
211F0-80381	199	211F8-22271	197	214A2-42611	42	214A7-42071	155
211F0-80391	199	211F8-22271	197	214A2-42611	43	214A7-42071	155
211F0-80401	199	211F8-22271	197	214A2-42611	44	214A7-42071	155
211F0-82551	191	211F8-22271	202	214A2-42611	45	214A7-42071	155
211F0-82551	199	211R9-12011	167	214A2-42621	21	214A7-42171	152
211F0-93001	201	211R9-12021	167	214A2-42621	22	214A7-42171	153
211F8-22201	179	211S9-12011	167	214A2-44001	31	214A7-42171	154
211F8-22201	185	211S9-12021	167	214A2-44501	25	214A7-42171	155
211F8-22201	194	21152-22121	13	214A2-44511	25	214A7-42181	156
211F8-22201	202	21152-22151	12	214A2-52002	46	214A7-42181	156
211F8-22211	179	21152-22151	13	214A2-52012	46	214A7-42181	156

PARTS NUMBER INDEX

Part No.	Fig.No.	Part No.	Fig.No.	Part No.	Fig.No.	Part No.	Fig.No.
214A7-42181	156	216B8-10301	195	216G0-50751	192	216G0-80702	200
214A7-42191	156	216B8-10301	203	216G0-50761	192	216G0-80712	200
214A7-42201	156	216B8-10311	178	216G0-50771	192	216G0-80722	200
214A7-52081	122	216B8-10311	195	216G0-50781	192	216G0-80732	200
214A8-11001	178	216B8-10311	203	216G0-50801	192	216G0-80742	200
214A8-11001	184	216B8-10321	178	216G0-50811	192	216G0-80752	200
214A8-11001	195	216B8-10321	195	216G0-50821	192	216G0-80762	200
214A8-11001	203	216B8-10321	203	216G0-50831	192	216G0-80772	200
214A8-12001	178	216G0-50201	192	216G0-50841	192	216G0-80782	200
214A8-12001	184	216G0-50211	192	216G0-50851	192	216G0-80792	200
214A8-12001	195	216G0-50221	192	216G0-50861	192	216G0-80802	200
214A8-12001	203	216G0-50231	192	216G0-50871	192	216G0-81301	200
214A8-12011	178	216G0-50241	192	216G0-50881	192	216G0-81311	200
214A8-12011	184	216G0-50251	192	216G0-50901	192	216G0-81321	200
214A8-12011	195	216G0-50261	192	216G0-50911	192	216G0-81331	200
214A8-12011	203	216G0-50271	192	216G0-50921	192	216G0-81341	200
214A8-12021	178	216G0-50281	192	216G0-50931	192	216G0-81351	200
214A8-12021	184	216G0-50291	192	216G0-50941	192	216G0-81361	200
214A8-12021	195	216G0-50301	192	216G0-50951	192	216G0-81381	200
214A8-12021	203	216G0-50311	192	216G0-50961	192	216G0-81391	200
214A8-12031	178	216G0-50321	192	216G0-50971	192	216G0-81401	200
214A8-12031	184	216G0-50331	192	216G0-50981	192	216G0-89821	200
214A8-12031	195	216G0-50341	192	216G0-53011	192	216G0-93101	201
214A8-12031	203	216G0-50351	192	216G0-53051	192	216G0-93151	201
214A8-42661	192	216G0-50361	192	216G0-53061	192	216G0-93201	183
214A8-42661	200	216G0-50371	192	216G0-59801	192	216G0-93201	189
214A8-43011	183	216G0-50381	192	216G0-80103	200	216G0-93201	193
214A8-43011	189	216G0-50401	192	216G0-80113	200	216G0-93201	201
214A8-43011	193	216G0-50411	192	216G0-80123	200	216G0-93211	183
214A8-44151	183	216G0-50421	192	216G0-80133	200	216G0-93211	189
214A8-44151	189	216G0-50431	192	216G0-80144	200	216G0-93212	193
214A8-44151	193	216G0-50441	192	216G0-80154	200	216G0-93212	201
214A8-44151	201	216G0-50451	192	216G0-80164	200	216G1-02011	5
214A8-52221	96	216G0-50461	192	216G0-80173	200	216G1-02021	6
214A9-20101	174	216G0-50471	192	216G0-80174	200	216G1-02031	6
214L5-32101	114	216G0-50481	192	216G0-80184	200	216G1-02051	4
214L7-62261	142	216G0-50491	192	216G0-80194	200	216G1-02071	4
214T2-42311	21	216G0-50501	192	216G0-80204	200	216G1-02111	1
214T2-42311	22	216G0-50511	192	216G0-80303	200	216G1-02111	2
214T2-42321	21	216G0-50521	192	216G0-80313	200	216G1-02301	4
214T2-42321	22	216G0-50531	192	216G0-80323	200	216G1-02311	4
215B4-52122	96	216G0-50541	192	216G0-80333	200	216G1-02451	3
215E4-12231	62	216G0-50551	192	216G0-80344	200	216G1-02461	3
215E7-62091	160	216G0-50561	192	216G0-80354	200	216G1-02471	3
215E8-42171	192	216G0-50571	192	216G0-80364	200	216G1-02481	3
215E8-42171	192	216G0-50581	192	216G0-80374	200	216G1-02491	3
215E8-42171	200	216G0-50601	192	216G0-80384	200	216G1-02501	3
215E8-42181	192	216G0-50611	192	216G0-80394	200	216G2-12021	8
215E8-42181	192	216G0-50621	192	216G0-80404	200	216G2-22051	12
215E8-42181	200	216G0-50631	192	216G0-80502	200	216G2-22051	13
215E8-42231	192	216G0-50641	192	216G0-80512	200	216G2-22202	122
215E8-42231	192	216G0-50651	192	216G0-80522	200	216G2-22211	12
215E8-42231	200	216G0-50661	192	216G0-80532	200	216G2-22211	13
215E8-42241	182	216G0-50671	192	216G0-80542	200	216G2-40301	17
215E8-42241	188	216G0-50681	192	216G0-80552	200	216G2-40602	25
215T0-83001	191	216G0-50701	192	216G0-80562	200	216G2-40602	27
215T0-83001	199	216G0-50711	192	216G0-80572	200	216G2-40602	28
215T0-83021	191	216G0-50721	192	216G0-80582	200	216G2-40602	29
215T0-83021	199	216G0-50731	192	216G0-80592	200	216G2-40701	25
216B8-10301	178	216G0-50741	192	216G0-80602	200	216G2-40711	25

PARTS NUMBER INDEX

Part No.	Fig.No.	Part No.	Fig.No.	Part No.	Fig.No.	Part No.	Fig.No.
216G2-40721	25	216G2-43582	29	216G4-12641	61	216G6-82621	139
216G2-40731	25	216G2-43592	25	216G4-12641	62	216G7-30221	143
216G2-42071	23	216G2-43592	27	216G4-12661	61	216G7-30321	144
216G2-42131	19	216G2-43592	28	216G4-12661	62	216G7-30421	145
216G2-42131	20	216G2-43592	29	216G4-12681	61	216G7-32001	143
216G2-42312	21	216G2-43602	25	216G4-12681	62	216G7-32001	144
216G2-42312	22	216G2-43602	27	216G4-12711	61	216G7-32001	145
216G2-42321	21	216G2-43602	28	216G4-12711	62	216G7-32001	146
216G2-43111	23	216G2-43602	29	216G4-12741	61	216G7-32011	143
216G2-43111	24	216G2-43611	25	216G4-12741	62	216G7-32011	144
216G2-43151	23	216G2-43611	27	216G4-12751	61	216G7-32011	145
216G2-43161	17	216G2-43611	28	216G4-12751	62	216G7-32011	146
216G2-43161	18	216G2-43611	29	216G4-12761	61	216G7-32021	143
216G2-43201	17	216G2-43622	25	216G4-12761	62	216G7-32021	144
216G2-43201	18	216G2-43622	27	216G4-30201	67	216G7-32021	145
216G2-43211	17	216G2-43622	28	216G4-30201	69	216G7-32021	146
216G2-43221	18	216G2-43622	29	216G4-50401	95	216G7-32041	143
216G2-43231	17	216G2-43631	25	216G4-50401	97	216G7-32041	144
216G2-43231	18	216G2-43631	27	216G4-52041	98	216G7-32041	145
216G2-43241	17	216G2-43631	28	216G4-52051	98	216G7-32041	146
216G2-43241	18	216G2-43631	29	216G4-52071	95	216G7-40012	152
216G2-43251	17	216G2-43651	21	216G4-52071	97	216G7-40012	153
216G2-43251	18	216G2-43651	22	216G4-52101	95	216G7-40012	154
216G2-43261	17	216G2-43711	21	216G4-52101	97	216G7-40012	155
216G2-43261	18	216G2-43711	22	216G5-22081	107	216G7-40022	152
216G2-43271	17	216G3-02001	59	216G5-22081	108	216G7-40022	153
216G2-43271	18	216G3-02051	59	216G5-22081	113	216G7-40022	154
216G2-43281	17	216G3-02061	59	216G5-22101	108	216G7-40022	155
216G2-43281	18	216G4-12091	19	216G5-32201	112	216G7-40032	153
216G2-43291	17	216G4-12091	20	216G5-32221	112	216G7-40032	154
216G2-43291	18	216G4-12101	61	216G5-32311	112	216G7-40032	155
216G2-43301	17	216G4-12101	62	216G5-32321	112	216G7-40042	154
216G2-43301	18	216G4-12111	61	216G5-32331	112	216G7-40042	155
216G2-43502	25	216G4-12111	62	216G5-32341	112	216G7-42001	152
216G2-43502	27	216G4-12151	62	216G5-42011	112	216G7-42011	153
216G2-43502	28	216G4-12161	62	216G6-32101	126	216G7-42011	154
216G2-43502	29	216G4-12171	62	216G6-32101	126	216G7-42161	108
216G2-43531	25	216G4-12251	181	216G6-42031	112	216G7-52051	122
216G2-43531	27	216G4-12251	187	216G6-42031	113	216G7-52101	123
216G2-43531	28	216G4-12251	65	216G6-42031	114	216G7-52201	123
216G2-43531	29	216G4-12531	61	216G6-42451	129	216G7-62211	157
216G2-43542	25	216G4-12531	62	216G6-42481	129	216G7-62211	158
216G2-43542	27	216G4-12541	61	216G6-42541	100	216G8-02001	181
216G2-43542	28	216G4-12541	62	216G6-42541	129	216G8-02001	187
216G2-43542	29	216G4-12551	61	216G6-42541	99	216G8-02001	190
216G2-43551	25	216G4-12551	62	216G6-42911	130	216G8-02001	197
216G2-43551	27	216G4-12561	61	216G6-42931	130	216G8-02502	157
216G2-43551	28	216G4-12561	62	216G6-43231	120	216G8-02502	158
216G2-43551	29	216G4-12581	61	216G6-43241	112	216G8-02502	183
216G2-43562	25	216G4-12581	62	216G6-43241	113	216G8-02502	183
216G2-43562	27	216G4-12591	61	216G6-43241	114	216G8-02502	189
216G2-43562	28	216G4-12591	62	216G6-43561	128	216G8-02502	189
216G2-43562	29	216G4-12601	61	216G6-43601	130	216G8-02502	193
216G2-43571	25	216G4-12601	62	216G6-52231	131	216G8-10301	178
216G2-43571	27	216G4-12611	61	216G6-52271	131	216G8-10301	195
216G2-43571	28	216G4-12611	62	216G6-52291	129	216G8-10301	203
216G2-43571	29	216G4-12621	61	216G6-52291	131	216G8-10311	178
216G2-43582	25	216G4-12621	62	216G6-82501	139	216G8-10311	195
216G2-43582	27	216G4-12631	61	216G6-82601	139	216G8-10311	203
216G2-43582	28	216G4-12631	62	216G6-82611	139	216G8-10321	178

PARTS NUMBER INDEX

Part No.	Fig.No.	Part No.	Fig.No.	Part No.	Fig.No.	Part No.	Fig.No.
216G8-10321	195	216G8-33361	187	216G8-52352	165	216K8-10361	184
216G8-10321	203	216G8-33361	190	216G8-52501	165	216K8-10361	195
216G8-10331	178	216G8-33361	197	216G8-53001	166	216K8-10361	203
216G8-10331	195	216G8-33361	197	216G8-53011	166	216K8-10371	184
216G8-10331	203	216G8-33371	181	216G8-53021	166	216K8-10371	195
216G8-10341	178	216G8-33371	187	216G8-53021	166	216K8-10371	203
216G8-10341	195	216G8-33371	190	216G8-53031	166	216K8-10381	184
216G8-10341	203	216G8-33371	197	216G8-53031	166	216K8-10381	195
216G8-10351	178	216G8-33371	197	216G8-53041	166	216K8-10381	203
216G8-10351	195	216G8-33401	181	216G8-53051	166	216K8-10391	184
216G8-10351	203	216G8-33401	187	216G9-10101	168	216K8-10391	195
216G8-10361	178	216G8-33401	190	216G9-12013	167	216K8-10391	203
216G8-10361	195	216G8-33401	197	216G9-12023	167	216K8-10401	184
216G8-10361	203	216G8-41001	183	216G9-12033	167	216K8-10401	195
216G8-10371	178	216G8-41001	189	216G9-12052	168	216K8-10401	203
216G8-10371	195	216G8-41001	193	216G9-12062	168	216K8-10411	184
216G8-10371	203	216G8-41001	201	216G9-12071	168	216K8-10411	195
216G8-10381	178	216G8-42031	182	216G9-12071	169	216K8-10411	203
216G8-10381	195	216G8-42031	188	216G9-12071	170	216K8-10421	184
216G8-10381	203	216G8-42031	191	216G9-12071	171	216K8-10421	195
216G8-10391	178	216G8-42031	199	216G9-12071	172	216K8-10421	203
216G8-10391	195	216G8-42111	183	216G9-12071	173	216K8-10431	184
216G8-10391	203	216G8-42111	189	216G9-12131	168	216K8-10431	195
216G8-10401	178	216G8-42111	193	216G9-12131	169	216K8-10431	203
216G8-10401	195	216G8-42121	183	216G9-12131	170	216K8-10441	184
216G8-10401	203	216G8-42121	189	216G9-12131	171	216K8-10441	195
216G8-10411	178	216G8-42121	193	216G9-12131	172	216K8-10441	203
216G8-10411	195	216G8-42601	200	216G9-12131	173	216M7-62101	141
216G8-10411	203	216G8-42621	200	216G9-12142	167	216M7-62101	151
216G8-10421	178	216G8-42631	200	216G9-32001	132	217G1-00202	2
216G8-10421	195	216G8-42641	200	216H3-92171	129	217G1-02001	6
216G8-10421	203	216G8-42651	200	216H3-92281	152	217G2-12021	9
216G8-10431	178	216G8-42661	200	216H3-92281	153	217G2-32001	15
216G8-10431	195	216G8-42661	200	216H3-92281	154	217G2-40301	18
216G8-10431	203	216G8-43151	182	216H3-92281	155	217G2-42021	23
216G8-10441	178	216G8-43151	188	216H3-92291	114	217G2-42021	24
216G8-10441	195	216G8-43161	192	216H3-92291	115	217G2-42051	23
216G8-10441	203	216G8-43161	192	216H3-92291	116	217G2-42051	24
216G8-12101	178	216G8-43161	200	216H3-92291	117	217G2-42151	23
216G8-12101	184	216G8-43501	183	216H5-42141	129	217G2-42151	24
216G8-12101	195	216G8-43501	189	216H7-82101	163	217G2-42301	21
216G8-12101	203	216G8-50103	165	216H7-82111	163	217G2-42301	22
216G8-12921	195	216G8-50113	165	216K8-10301	184	217U9-12002	167
216G8-12921	203	216G8-51001	166	216K8-10301	195	217Y9-12001	167
216G8-22201	180	216G8-51011	166	216K8-10301	203	217Y9-12011	167
216G8-22201	186	216G8-51011	166	216K8-10311	184	218B9-12001	167
216G8-22201	196	216G8-51011	166	216K8-10311	195	218B9-12011	167
216G8-22201	204	216G8-51011	166	216K8-10311	203	218E8-30281	181
216G8-22301	196	216G8-52201	165	216K8-10321	184	218E8-30281	187
216G8-22301	204	216G8-52251	166	216K8-10321	195	218G0-40201	190
216G8-22311	196	216G8-52261	166	216K8-10321	203	218G0-40211	190
216G8-22311	204	216G8-52261	166	216K8-10331	184	218G0-40221	190
216G8-22321	196	216G8-52301	165	216K8-10331	195	218G0-40231	190
216G8-22321	204	216G8-52311	181	216K8-10331	203	218G0-40241	190
216G8-22331	196	216G8-52311	187	216K8-10341	184	218G0-40251	190
216G8-22331	204	216G8-52321	181	216K8-10341	195	218G0-40261	190
216G8-22341	196	216G8-52321	187	216K8-10341	203	218G0-40271	190
216G8-22341	204	216G8-52321	190	216K8-10351	184	218G0-40281	190
216G8-33351	197	216G8-52321	197	216K8-10351	195	218G0-40291	190
216G8-33361	181	216G8-52342	165	216K8-10351	203	218G0-40301	190

PARTS NUMBER INDEX

Part No.	Fig.No.	Part No.	Fig.No.	Part No.	Fig.No.	Part No.	Fig.No.
218G0-40311	190	218G2-30101	14	218G8-30251	181	218G8-30571	181
218G0-40321	190	218G2-42001	21	218G8-30251	187	218G8-30571	187
218G0-40331	190	218G2-42001	22	218G8-30261	181	218G8-30581	181
218G0-40341	190	218G2-42101	23	218G8-30261	187	218G8-30581	187
218G0-40351	190	218G2-52001	46	218G8-30271	181	218G8-40001	182
218G0-40361	190	218G2-52061	46	218G8-30271	187	218G8-40001	188
218G0-40371	190	218G4-22001	66	218G8-30291	181	218G8-40011	182
218G0-40381	190	218G4-22001	66	218G8-30291	187	218G8-40011	188
218G0-40401	190	218G5-10111	102	218G8-30301	181	218G8-40021	182
218G0-40411	190	218G5-10121	102	218G8-30301	187	218G8-40021	188
218G0-40421	190	218G5-10341	101	218G8-30311	181	218G8-40031	182
218G0-40431	190	218G5-10351	101	218G8-30311	187	218G8-40031	188
218G0-40441	190	218G5-42011	115	218G8-30321	181	218G8-40041	182
218G0-40451	190	218G5-42011	116	218G8-30321	187	218G8-40041	188
218G0-40461	190	218G5-42011	117	218G8-30331	181	218G8-40051	182
218G0-40471	190	218G5-42021	115	218G8-30331	187	218G8-40051	188
218G0-40481	190	218G5-42021	116	218G8-30341	181	218G8-40061	182
218G0-40491	190	218G5-42021	117	218G8-30341	187	218G8-40061	188
218G0-40501	190	218G5-42601	115	218G8-30351	181	218G8-40071	182
218G0-40511	190	218G5-42601	116	218G8-30351	187	218G8-40071	188
218G0-40521	190	218G5-42601	117	218G8-30361	181	218G8-40081	182
218G0-40531	190	218G5-42621	115	218G8-30361	187	218G8-40081	188
218G0-40541	190	218G5-42621	116	218G8-30371	181	218G8-40091	182
218G0-40551	190	218G5-42621	117	218G8-30371	187	218G8-40091	188
218G0-40561	190	218G6-40301	130	218G8-30381	181	218G8-40101	182
218G0-40571	190	218G6-40501	129	218G8-30381	187	218G8-40101	188
218G0-40581	190	218G6-40521	129	218G8-30401	181	218G8-40111	182
218G0-60101	194	218G6-42101	128	218G8-30401	187	218G8-40111	188
218G0-70101	197	218G6-42111	128	218G8-30411	181	218G8-40121	182
218G0-70111	197	218G6-42201	128	218G8-30411	187	218G8-40121	188
218G0-70121	197	218G6-42211	128	218G8-30421	181	218G8-40131	182
218G0-70131	197	218G6-42291	130	218G8-30421	187	218G8-40131	188
218G0-70141	197	218G6-42301	130	218G8-30431	181	218G8-40141	182
218G0-70151	197	218G6-42391	130	218G8-30431	187	218G8-40141	188
218G0-70161	197	218G6-42451	129	218G8-30441	181	218G8-40151	182
218G0-70171	197	218G6-42471	129	218G8-30441	187	218G8-40151	188
218G0-70181	197	218G6-42641	129	218G8-30451	181	218G8-40161	182
218G0-70191	197	218G7-30521	146	218G8-30451	187	218G8-40161	188
218G0-70201	197	218G7-60301	159	218G8-30461	181	218G8-40171	182
218G0-70501	197	218G7-60301	161	218G8-30461	187	218G8-40171	188
218G0-70511	197	218G7-60311	159	218G8-30471	181	218G8-40181	182
218G0-70521	197	218G7-60311	161	218G8-30471	187	218G8-40181	188
218G0-70531	197	218G7-62061	162	218G8-30481	181	218G8-42501	182
218G0-70541	197	218G7-62071	162	218G8-30481	187	218G8-42501	188
218G0-70551	197	218G7-62081	159	218G8-30491	181	218G8-42501	191
218G0-70561	197	218G7-62081	161	218G8-30491	187	218G8-42501	199
218G0-70571	197	218G7-62111	157	218G8-30501	181	218G8-42501	200
218G0-70581	197	218G7-62261	159	218G8-30501	187	218G8-42511	182
218G0-70591	197	218G7-62261	161	218G8-30511	181	218G8-42511	188
218G0-70601	197	218G8-20001	179	218G8-30511	187	218G8-42511	200
218G0-90101	202	218G8-30201	181	218G8-30521	181	218G8-42521	191
218G1-00101	1	218G8-30201	187	218G8-30521	187	218G8-42521	199
218G1-02101	5	218G8-30211	181	218G8-30531	181	218G8-42701	182
218G1-02301	1	218G8-30211	187	218G8-30531	187	218G8-42701	188
218G1-02351	1	218G8-30221	181	218G8-30541	181	218G8-42701	191
218G2-12001	8	218G8-30221	187	218G8-30541	187	218G8-42701	199
218G2-22001	12	218G8-30231	181	218G8-30551	181	218G8-42701	200
218G2-22001	13	218G8-30231	187	218G8-30551	187	218G8-45611	191
218G2-22051	12	218G8-30241	181	218G8-30561	181	218G8-45691	191
218G2-22051	13	218G8-30241	187	218G8-30561	187	218G8-45701	191

PARTS NUMBER INDEX

Part No.	Fig.No.	Part No.	Fig.No.	Part No.	Fig.No.	Part No.	Fig.No.
218G8-45771	199	218G8-46611	182	22018-30261	185	222A2-42401	18
218G8-45791	182	218G8-46611	188	22018-30261	194	222A2-42511	26
218G8-45791	188	218G8-46611	200	22018-30261	202	222A5-52111	120
218G8-45831	191	218G8-46691	182	22018-30304	179	222A6-42451	130
218G8-45851	191	218G8-46691	188	22018-30304	185	222A6-42461	130
218G8-45851	199	218G8-46691	199	22018-30304	194	222A9-32011	106
218G8-45871	182	218G8-46751	200	22018-30304	202	222A9-32011	106
218G8-45871	188	218G8-46771	182	22118-40181	182	22216-30051	126
218G8-45931	191	218G8-46771	188	22118-40181	182	22216-30051	127
218G8-45931	199	218G8-46791	191	22118-40181	188	22252-32241	14
218G8-45931	200	218G8-46851	200	22118-40181	188	22252-32241	15
218G8-45951	182	218G8-46951	191	22118-40181	191	22252-32251	112
218G8-45951	188	218G8-46971	182	22118-40181	199	22252-32251	113
218G8-46011	182	218G8-46971	188	22118-40181	200	22252-32251	114
218G8-46011	188	218G8-47111	182	22132-40041	26	22252-32251	10
218G8-46011	191	218G8-47111	188	22132-40202	26	22252-32251	14
218G8-46011	200	218G9-12001	167	22192-22091	12	22252-32251	15
218G8-46031	182	218G9-12011	167	22192-22091	13	22256-42001	26
218G8-46031	188	218G9-12071	168	22192-42411	26	224G5-42061	112
218G8-46031	191	218G9-92101	167	22193-03001	59	224G5-42061	113
218G8-46031	199	218H5-40501	113	22194-32222	67	224G5-42061	114
218G8-46091	191	218H5-40521	113	22194-32222	68	224W4-52071	5
218G8-46091	199	218H5-42521	113	22194-32222	69	224W5-32421	114
218G8-46091	200	218J8-20001	185	22194-32361	67	224W7-60311	114
218G8-46111	182	218M2-10101	8	22194-32361	68	224W7-62701	96
218G8-46111	188	218M2-12101	8	22194-32361	69	224W7-62711	96
218G8-46151	191	218M2-12101	8	22197-60231	65	225A7-62021	141
218G8-46151	191	218M2-12301	8	22199-12401	165	225R2-42001	23
218G8-46171	191	218M5-10341	101	22199-12401	165	225R6-32001	127
218G8-46171	199	218M5-10351	101	22199-12401	48	225R9-12001	169
218G8-46191	182	218M5-10401	99	22199-12401	67	225R9-12031	169
218G8-46191	188	218M5-12501	100	22199-12401	68	225R9-12052	169
218G8-46191	199	218M5-12501	99	22199-12401	69	225R9-12071	169
218G8-46191	200	218N2-10101	8	22199-12401	96	225R9-12081	169
218G8-46211	182	218P9-12001	167	22199-22251	174	225R9-12091	169
218G8-46211	188	218P9-12011	167	222A2-10211	8	225R9-12101	127
218G8-46251	200	219G2-12001	9	222A2-10211	9	225R9-12112	169
218G8-46271	182	219G2-12201	9	222A2-22061	124	22513-02051	59
218G8-46271	188	219G2-30101	15	222A2-22061	125	22517-40051	152
218G8-46271	191	219G7-62111	158	222A2-22071	124	22517-40051	153
218G8-46311	182	219G9-92101	167	222A2-22071	125	22517-40051	154
218G8-46311	188	219M1-02101	4	222A2-42031	17	22517-40051	155
218G8-46311	199	219M2-10101	9	222A2-42031	18	22517-40051	182
218G8-46331	182	219M2-12301	9	222A2-42031	19	22517-40051	188
218G8-46331	188	219N2-10101	9	222A2-42031	20	22517-40051	200
218G8-46331	200	219S1-02001	4	222A2-42331	17	22518-40121	191
218G8-46351	182	219S5-40201	114	222A2-42331	17	22518-40121	199
218G8-46351	188	219S5-40301	114	222A2-42331	18	22574-32062	67
218G8-46351	191	219S5-42271	117	222A2-42331	18	22574-32062	67
218G8-46351	200	219W9-12071	169	222A2-42341	17	22574-32062	68
218G8-46431	191	220F2-22001	13	222A2-42341	17	22574-32062	69
218G8-46451	182	22018-30121	179	222A2-42341	18	22574-32062	69
218G8-46451	188	22018-30121	179	222A2-42341	18	22574-32102	67
218G8-46451	199	22018-30121	185	222A2-42361	17	22574-32102	68
218G8-46471	200	22018-30121	185	222A2-42361	18	22574-32102	69
218G8-46511	191	22018-30121	194	222A2-42401	17	22574-32121	67
218G8-46531	182	22018-30121	202	222A2-42401	17	22574-32121	69
218G8-46531	188	22018-30261	179	222A2-42401	17	22574-40202	75
218G8-46591	191	22018-30261	179	222A2-42401	18	22574-40202	75
218G8-46591	199	22018-30261	185	222A2-42401	18	22574-40303	72

PARTS NUMBER INDEX

Part No.	Fig.No.	Part No.	Fig.No.	Part No.	Fig.No.	Part No.	Fig.No.
22574-40303	75	229F6-42201	133	234A0-50601	192	234A6-82231	140
22574-40303	78	229F6-42201	136	234A0-50801	192	234A6-82241	139
22574-40303	81	229F6-42201	136	234A0-52611	192	234A6-82241	140
22578-32841	179	229F6-42201	136	234A0-62101	193	234A6-82251	140
22578-32841	179	229F6-42201	136	234A1-02071	1	234A6-82261	140
22578-32841	185	229F6-42201	137	234A1-02071	2	234A6-82271	139
22578-32841	185	229F6-42201	19	234A2-12201	8	234A6-82271	140
22578-32841	194	229F6-42201	20	234A2-12201	9	234A6-82281	139
22578-32841	202	229F6-42211	133	234A2-12211	8	234A6-82281	140
22580-53311	200	229F6-42211	133	234A2-12211	9	234A6-82291	139
22580-53321	192	229F6-42211	133	234A2-30501	16	234A6-82291	140
22580-53321	200	229F6-42211	133	234A2-42301	31	234A6-82301	139
22655-42591	113	229F6-42211	133	234A6-42042	131	234A6-82301	140
22655-42591	114	229F6-42211	134	234A6-42072	131	234A7-40052	155
22672-42501	27	229F6-42211	134	234A6-43121	130	234A7-42011	155
22672-42501	28	229F6-42211	136	234A6-81001	140	234A8-02201	201
22672-42501	29	229F6-42211	136	234A6-82001	139	234A8-42561	192
22678-52021	192	229F6-42211	136	234A6-82001	140	234A8-42561	192
22679-12102	177	229F6-42211	136	234A6-82011	140	234A8-42561	200
22679-43831	192	22959-12052	169	234A6-82021	139	234A8-42571	181
22679-47301	103	22959-12052	171	234A6-82021	140	234A8-42571	182
22679-47301	27	230C1-02041	102	234A6-82031	139	234A8-42571	187
22679-47301	28	230C1-02041	103	234A6-82031	140	234A8-42571	188
22679-47301	29	230C1-02041	103	234A6-82041	139	234A8-42571	190
22679-47301	30	230C1-02041	131	234A6-82041	140	234A8-42571	192
22679-47301	43	230C2-42201	23	234A6-82051	139	234A8-42571	192
22679-47301	44	230C2-42201	24	234A6-82051	140	234A8-42571	197
22717-40061	108	230C5-55021	120	234A6-82061	139	234A8-42571	200
22717-40061	152	230C5-55031	120	234A6-82061	140	234A8-42611	183
22717-40061	153	230C5-55041	120	234A6-82071	139	234A8-42611	189
22717-40061	154	230C5-55051	120	234A6-82071	140	234A8-42611	193
22717-40061	155	230C5-55061	120	234A6-82081	139	234A8-42611	201
22717-40081	182	230C5-55071	120	234A6-82081	140	234A8-42621	183
22717-40081	188	230C5-55081	120	234A6-82091	139	234A8-42621	189
22717-40081	200	230C5-55101	120	234A6-82091	140	234A8-42622	193
22777-60301	151	230C5-55111	120	234A6-82101	139	234A8-42622	201
228F1-02211	4	230C5-55121	120	234A6-82101	140	234A8-43051	183
228F2-42131	21	231A8-12001	195	234A6-82111	140	234A8-43051	189
228U7-62221	163	231A8-12001	203	234A6-82121	140	234A8-43501	200
228U7-62221	164	231A8-12011	195	234A6-82131	139	234B2-42201	21
229F0-91001	193	231A8-12011	203	234A6-82131	140	234B7-82101	164
229F0-91001	201	231A8-12021	195	234A6-82141	139	234B7-82111	164
229F0-94001	193	231A8-12021	203	234A6-82141	140	234H5-30201	114
229F0-94101	201	231A8-12031	195	234A6-82151	139	234H5-32401	114
229F2-22071	124	231A8-12031	203	234A6-82151	140	234H5-32411	114
229F2-22071	125	232W9-10101	169	234A6-82161	140	234H5-32421	114
229F2-22151	122	232W9-12001	169	234A6-82171	140	234H5-32431	114
229F2-22161	122	232W9-12011	169	234A6-82181	139	234H5-32441	114
229F2-42141	101	232W9-12021	169	234A6-82181	140	234H7-60301	157
229F2-42141	176	232W9-12051	167	234A6-82191	139	234H7-60301	158
229F2-42161	45	232W9-12101	169	234A6-82191	140	23452-42181	23
229F2-42421	17	232W9-12111	169	234A6-82201	139	23452-42181	24
229F2-42421	17	23200-50811	192	234A6-82201	139	23453-02071	59
229F2-42421	18	23200-50841	192	234A6-82201	140	23453-02091	59
229F2-42421	18	23232-42072	23	234A6-82211	139	23453-02131	59
229F2-42431	17	23232-42072	24	234A6-82211	139	23453-79801	60
229F2-42431	18	23235-40091	118	234A6-82211	140	23455-42021	115
229F6-42201	133	23302-42311	27	234A6-82221	139	23455-42021	116
229F6-42201	133	23302-42311	28	234A6-82221	140	23455-42021	117
229F6-42201	133	23302-42311	29	234A6-82231	139	23456-42181	112

PARTS NUMBER INDEX

Part No.	Fig.No.	Part No.	Fig.No.	Part No.	Fig.No.	Part No.	Fig.No.
23456-42181	114	23678-40100	201	23678-40245	183	239A4-12112	61
23456-42181	129	23678-40110	183	23678-40245	189	239A4-12121	61
23457-42041	153	23678-40110	189	23678-40245	201	239A4-12121	62
23457-42041	154	23678-40115	201	23678-40260	183	239A4-12131	61
23457-60301	65	23678-40125	183	23678-40260	183	239A4-12201	63
23457-60311	65	23678-40125	189	23678-40260	189	239A4-12201	64
23458-52031	70	23678-40125	201	23678-40260	189	239A4-12211	63
23460-73121	96	23678-40130	183	23678-40260	201	239A4-12211	64
235C2-40301	21	23678-40130	189	23678-40270	183	239A4-12211	65
235C2-40301	22	23678-40135	183	23678-40270	189	239A4-12402	61
23647-40041	152	23678-40135	189	23678-40280	201	239A4-12411	61
23647-40121	113	23678-40140	183	23678-40285	183	239A4-12431	61
23648-50161	192	23678-40140	183	23678-40285	183	239A4-12441	61
23650-52861	200	23678-40140	189	23678-40285	189	239A4-12501	19
23651-02001	1	23678-40140	189	23678-40285	189	239A4-12501	20
23651-02001	2	23678-40140	201	23678-40295	201	239A4-12511	19
23651-02011	1	23678-40150	183	23678-40315	183	239A4-12511	20
23651-02011	2	23678-40150	189	23678-40315	189	239A4-12521	19
23652-12051	10	23678-40150	201	23678-40340	183	239A4-12521	20
23652-12051	14	23678-40150	201	23678-40340	189	239A4-12541	19
23652-12051	15	23678-40155	183	23678-42401	183	239A4-22001	63
23652-44001	39	23678-40155	189	23678-42401	189	239A4-22001	64
23653-02001	59	23678-40160	183	23678-42401	201	239A5-10111	102
23654-32041	67	23678-40160	189	23679-45051	183	239A5-10121	102
23654-32041	68	23678-40165	183	23679-45051	189	239A5-12401	102
23654-32041	69	23678-40165	189	23679-45051	201	239A5-12401	103
23654-34051	71	23678-40165	201	23679-45051	33	239A5-12411	102
23654-34051	71	23678-40165	201	237A1-02101	3	239A5-12411	103
23655-22101	129	23678-40170	201	237A2-22101	124	239A5-12501	104
23657-12002	142	23678-40175	183	237A2-42151	23	239A5-12521	104
23657-42131	153	23678-40175	189	237A2-42211	23	239A5-20302	107
23657-60311	157	23678-40175	201	237A2-42212	23	239A5-20302	108
23657-60311	158	23678-40180	183	237A5-22101	107	239A5-20402	107
23658-52051	192	23678-40180	189	237B2-42211	23	239A5-20402	108
23658-52061	192	23678-40185	201	237B2-42212	23	239A5-22252	107
23658-52101	165	23678-40190	183	237H1-02001	3	239A5-22252	108
23658-52101	165	23678-40190	183	23772-12071	8	239A5-40061	109
23658-52401	165	23678-40190	189	23772-12071	9	239A5-40061	111
23658-52401	165	23678-40190	189	23775-42101	113	239A5-40071	109
23659-12054	168	23678-40190	201	23775-42101	114	239A5-40101	112
23659-12101	167	23678-40195	183	238A2-22002	13	239A5-40101	113
23659-42161	180	23678-40195	189	238A2-42151	23	239A5-40101	114
23659-42161	186	23678-40200	201	238A2-42151	24	239A5-40101	119
23659-42161	196	23678-40205	183	238A2-42211	24	239A5-40102	112
23659-42161	204	23678-40205	183	238B2-42211	24	239A5-40102	113
23678-06002	181	23678-40205	189	238F5-22101	108	239A5-40102	114
23678-06002	187	23678-40205	189	23870-52821	52	239A5-40102	119A
23678-06002	190	23678-40210	201	23870-52871	191	239A5-40201	109
23678-06002	197	23678-40215	183	23870-52871	199	239A5-40501	112
23678-40075	183	23678-40215	183	239A2-12141	9	239A5-40601	119A
23678-40075	189	23678-40215	189	239A2-22101	125	239A5-40611	119
23678-40085	183	23678-40215	189	239A2-40501	19	239A5-40631	119
23678-40085	189	23678-40215	201	239A2-42031	23	239A5-40641	119A
23678-40095	157	23678-40220	201	239A2-42031	24	239A5-42071	115
23678-40095	158	23678-40230	183	239A2-42101	23	239A5-42071	116
23678-40095	183	23678-40230	189	239A2-42101	24	239A5-42071	117
23678-40095	189	23678-40230	201	239A2-42201	17	239A5-42101	119
23678-40095	201	23678-40235	183	239A2-42201	18	239A5-42101	119A
23678-40100	183	23678-40235	189	239A2-42221	25	239A5-42121	119
23678-40100	189	23678-40235	201	239A4-12102	61	239A5-42121	119A

PARTS NUMBER INDEX

Part No.	Fig.No.	Part No.	Fig.No.	Part No.	Fig.No.	Part No.	Fig.No.
239A5-42161	119A	239B5-40031	110	24234-32182	68	24662-22032	13
239A5-42171	119	239B5-40201	110	24234-32182	69	24662-22131	13
239A5-42181	119	239B5-42201	109	24234-32221	67	24662-22141	13
239A5-42181	119A	239B5-42201	110	24234-32221	68	24843-02011	59
239A5-42191	119	239B5-42201	111	24234-32221	69	24843-02062	59
239A5-42191	119A	239B5-42211	109	24234-32231	67	24868-42111	192
239A5-42221	119	239B5-42211	110	24234-32231	67	24868-42111	192
239A5-42221	119A	239B5-42211	111	24234-32231	67	24868-42111	200
239A5-42251	119A	239B5-42221	109	24234-32231	68	25414-40201	75
239A5-42261	119	239B5-42221	109	24234-32231	68	25592-42081	23
239A5-42271	119	239B5-42221	110	24234-32231	68	25592-42081	24
239A5-42271	119A	239B5-42221	110	24234-32231	68	25592-42121	124
239A5-42281	119	239B5-42221	111	24234-32231	68	25592-42121	125
239A5-42281	119A	239B5-42221	111	24234-32231	69	25592-52002	59
239A5-42291	119	239B5-42231	109	24234-32231	69	25594-52141	63
239A5-42291	119A	239B5-42231	110	24234-32231	69	25594-52141	64
239A5-42301	118	239B5-42231	111	24234-32241	67	25594-52261	95
239A5-42311	119	239B5-42501	113	24234-32241	68	25594-52261	97
239A5-42311	119A	239B5-42701	115	24234-32241	69	25594-52271	95
239A5-42321	119	239B5-42701	116	24234-32271	67	25594-52271	97
239A5-42321	119A	239B5-42701	117	24234-32271	69	25594-52281	95
239A5-42351	114	239B5-42721	112	24234-32381	95	25594-52281	97
239A5-42351	115	239B5-42721	113	24234-32381	97	25594-52362	95
239A5-42351	116	239B5-42721	114	24234-32411	67	25594-52362	97
239A5-42351	117	239B6-50302	131	24234-32411	68	25594-52371	95
239A5-42381	112	239B6-52221	131	24234-32411	69	25594-52371	97
239A5-42381	113	239B6-52601	131	24234-32421	67	25594-52381	95
239A5-42381	114	239H5-40211	114	24234-32421	69	25594-52381	97
239A5-42381	21	239H5-40221	111	24234-32501	70	25594-52391	95
239A5-42381	22	239H5-40311	114	24234-39803	67	25594-52391	97
239A5-42381	42	239H5-40411	111	24234-39803	68	25594-52401	95
239A5-42381	44	239H5-42301	114	24234-39803	69	25594-52401	97
239A5-42401	112	239H5-42371	114	24234-39813	67	25594-52411	95
239A5-42411	112	239H5-42451	114	24234-39813	69	25594-52411	97
239A5-42441	115	239H7-52001	122	24234-40201	89	25594-52431	98
239A5-42441	116	23917-42191	192	24236-12572	70	25594-59802	95
239A5-42441	117	24154-40101	72	24236-12581	70	25594-59802	96
239A5-42451	115	24154-40101	75	24237-60411	151	25594-59802	97
239A5-42461	115	24230-82211	191	24237-62341	151	25595-42311	112
239A5-42471	115	24230-82211	199	24239-22001	174	25595-42311	119
239A5-50101	120	24230-82221	191	24274-40201	76	25595-42311	119A
239A6-40201	128	24230-82221	199	24274-40501	73	25595-42381	119A
239A6-42001	128	24230-82231	191	24274-40501	76	25595-42391	119A
239A6-50112	131	24230-82231	199	24274-40501	79	25595-42411	119
239A6-50302	131	24230-82291	191	24274-40501	82	25595-42411	119A
239A6-52131	131	24230-82291	199	24329-46201	183	25595-42421	119
239A6-52141	131	24234-30551	66	24329-46201	189	25595-42421	119A
239A6-52171	131	24234-30551	66	24352-42521	21	25595-42452	112
239A6-52221	131	24234-30551	67	24352-42521	22	25595-42452	112
239A6-52601	131	24234-30551	68	24389-46021	191	25595-42491	112
239A7-52001	122	24234-30551	69	24389-46021	199	25595-42491	113
239A7-62111	162	24234-30551	95	24453-02061	59	25595-42491	114
239A7-62351	162	24234-30551	97	24459-42921	183	25596-42361	129
239A7-62401	162	24234-30561	67	24459-42921	189	25596-42361	26
239A9-12301	168	24234-30561	69	24459-42921	193	25597-62211	63
239A9-92001	106	24234-32123	67	24459-42951	183	25597-62211	64
239A9-92001	106	24234-32123	69	24459-42951	189	256A1-08031	4
239B2-42201	17	24234-32131	67	24459-42951	193	256A2-42171	23
239B2-42201	18	24234-32131	69	24459-42951	201	256A2-42171	24
239B5-40021	110	24234-32182	67	24469-42701	96	256C1-08011	3

PARTS NUMBER INDEX

Part No.	Fig.No.	Part No.	Fig.No.	Part No.	Fig.No.	Part No.	Fig.No.
256C1-08011	4	273A9-12242	167	27732-42311	35	510F3-74001	194
256C5-12671	131	27389-12031	167	27732-42311	36	510F3-74001	202
256C7-42281	114	27389-12061	167	27732-42311	38	510F3-82611	72
256J6-42291	32	27390-50321	191	27732-42311	43	510F3-82611	75
25784-52342	96	27390-50331	191	27732-42311	44	510F3-82611	78
25785-43091	112	27390-50341	191	278P0-82121	200	510F3-82611	81
25787-82081	163	27390-50351	191	278P0-82131	200	510F5-54051	182
25787-82081	164	27390-50361	191	278P0-82131	200	510F5-54051	188
25789-12051	168	27390-50371	191	278P0-82141	200	510F5-54051	191
25790-94021	201	27390-50381	191	278P0-82151	200	510F5-54051	199
25808-42481	191	27390-50391	191	278R0-63151	182	510F5-54051	200
25808-42481	199	27390-50401	191	278R0-63151	188	510F5-54061	182
25908-44101	191	27390-50411	191	27912-62441	120	510F5-54061	188
25908-44101	199	27390-50421	191	27970-82211	191	510F5-54061	191
25908-44111	191	27390-59801	191	27970-82211	199	510F5-54061	199
25908-44111	199	27390-59801	199	27979-43101	183	510F5-54061	200
25957-62201	164	27390-82011	191	27979-43101	189	510H2-92001	167
25958-52201	96	27390-82011	199	27979-43101	193	511F3-74021	179
25958-52211	96	27390-82101	191	27979-43101	201	511F3-74021	181
25958-52221	96	27390-82101	199	280B8-42001	182	511F3-74021	185
26062-42881	21	27399-12051	167	280B8-42001	188	511F3-74021	187
26062-42881	22	27399-12091	167	280B8-42031	182	511F3-74021	187
26062-42881	27	27415-52151	120	280B8-42031	188	511F3-74021	190
26062-42881	28	27419-12061	169	281E7-42101	156	511F3-74021	190
26062-42881	29	27419-12061	170	29560-82012	191	511F3-74021	194
26062-42881	30	27419-12061	171	29560-82012	199	511F3-74021	197
26062-42881	42	27419-12061	172	3956323	37	511F3-74021	197
26062-42881	43	27419-12061	173	509K2-30101	20	511F3-74021	197
26062-42881	44	27419-12062	168	509P3-72151	11	511F3-74021	202
26094-17001	65	27419-12062	169	509P9-90101	26	511F3-74031	179
26094-17021	65	27419-12071	169	510B2-92001	167	511F3-74031	181
26094-17021	65	27419-12071	170	510F0-82032	16	511F3-74031	185
26094-17081	65	27419-12071	171	510F2-40101	68	511F3-74031	187
26094-17091	65	27419-12071	172	510F2-40211	68	511F3-74031	187
26094-17101	65	27419-12071	173	510F2-40301	68	511F3-74031	190
26094-17111	65	27419-12072	168	510F2-40311	68	511F3-74031	190
26094-17121	65	27419-12072	169	510F2-40403	96	511F3-74031	194
26094-17141	65	27455-22011	107	510F2-40413	96	511F3-74031	197
26094-17151	65	27652-62211	31	510F2-40421	96	511F3-74031	197
26314-17001	65	27662-62721	102	510F2-40441	96	511F3-74031	197
26314-17021	65	27662-63041	129	510F2-42201	160	511F3-74031	202
27042-42312	107	277H0-62101	193	510F2-42211	96	51152-82012	169
27042-42312	108	277H0-62111	193	510F2-42262	68	51152-82012	171
27042-42312	160	277H0-63001	193	510F2-42301	68	51152-82022	169
27042-43501	32	277H4-30211	67	510F2-43001	68	51152-82022	171
27042-64311	41	277H4-30211	69	510F2-43001	68	51153-02001	171
271A4-30311	67	277H4-30301	67	510F2-43021	68	51192-82141	167
271A4-30311	69	277H4-30301	69	510F2-43021	68	51192-82151	167
271A7-52301	122	277H4-30401	67	510F2-43021	68	51232-60503	60
271A9-12191	177	277H4-30401	69	510F2-43021	68	51232-60513	60
271A9-12251	168	277H7-60601	151	510F2-43041	68	51232-82001	169
271F4-12221	61	277P0-92131	201	510F2-43041	68	51232-82001	170
271F4-12221	62	27732-42221	104	510F2-43051	68	51232-82001	171
271F4-12231	61	27732-42311	26	510F2-43051	68	51232-82001	172
271F4-12231	62	27732-42311	27	510F2-44001	68	51232-82001	173
271F4-12241	61	27732-42311	27	510F2-44001	68	51232-82011	169
271F4-12241	62	27732-42311	28	510F2-44001	68	51232-82011	171
271J8-52102	165	27732-42311	29	510F2-92001	167	51232-82021	169
272E7-52022	124	27732-42311	30	510F3-74001	179	51232-82021	171
272E7-52022	125	27732-42311	31	510F3-74001	185	51232-82032	169

PARTS NUMBER INDEX

Part No.	Fig.No.	Part No.	Fig.No.	Part No.	Fig.No.	Part No.	Fig.No.
51232-82141	167	514A3-82012	171	516G1-42101	36	516G3-82041	171
51232-82151	167	514A3-82022	169	516G1-42111	27	516G3-82051	171
51233-02011	171	514A3-82022	171	516G1-42111	28	516G3-82061	173
51233-02021	171	514A3-82032	171	516G1-42111	28	516G3-82071	173
51233-80401	78	514A3-82042	171	516G1-42111	29	516G3-82101	171
51233-80451	91	514A3-82052	171	516G1-42121	29	516G3-82111	169
51233-83021	171	514A3-82062	171	516G1-42151	27	516G3-82111	171
51233-83221	171	514A3-82072	171	516G1-42151	28	516G3-82121	169
51233-83421	171	514A3-82301	167	516G1-42151	29	516G3-82121	171
51233-83621	171	514A3-82301	202	516G1-42211	30	516G3-82131	171
51233-83821	171	514A3-82321	167	516G1-42211	36	516G3-82141	171
51236-80201	78	514A3-82321	202	516G1-42251	133	516G3-82151	171
51236-80211	78	514A3-82331	167	516G1-42251	133	516G3-82161	171
51236-80221	78	514A3-82331	202	516G1-42251	133	516G3-82171	171
51236-80301	84	514A3-82341	167	516G1-42251	133	516G3-82181	173
51236-80311	84	514A3-82341	202	516G1-42251	133	516G3-82191	173
51236-80321	84	514A3-82351	167	516G1-42251	134	516G3-82201	171
51236-80401	86	514A3-82351	202	516G1-64301	196	516G3-82211	169
51236-80411	86	514A3-82361	167	516G1-64301	204	516G3-82211	171
51236-80421	86	514A3-82361	202	516G1-64351	196	516G3-82221	169
51236-80431	86	514A3-82371	167	516G1-64351	204	516G3-82221	171
51236-80441	86	514A3-82371	202	516G2-40451	65	516G3-82232	171
51236-80451	86	514A3-82381	167	516G2-42401	65	516G3-82241	171
51236-80501	91	514A3-82381	202	516G2-42411	65	516G3-82251	171
51236-80511	91	514A3-82391	167	516G2-42411	65	516G3-82261	171
51236-80521	91	514A3-82391	202	516G2-72051	126	516G3-82271	171
51272-82141	167	514A3-82611	87	516G2-72701	169	516G3-82281	173
51272-82151	167	514A3-82611	89	516G2-72701	170	516G3-82291	173
51276-80201	79	514A3-82611	91	516G2-72701	171	516G3-82302	171
51276-80211	79	514A3-82611	93	516G2-72701	172	516G3-82312	171
51276-80221	79	514A5-12011	101	516G2-72701	173	516G3-82322	171
514A1-41001	30	514A5-12011	101	516G2-72711	169	516G3-82332	171
514A1-41001	43	514A5-12011	102	516G2-72711	170	516G3-82342	171
514A1-41001	44	514A5-12011	102	516G2-72711	171	516G3-82352	171
514A1-41011	30	514A5-12011	103	516G2-72711	172	516G3-82362	171
514A1-41021	30	514A5-12011	130	516G2-72711	173	516G3-82372	171
514A1-41031	30	514A5-12021	106	516G2-74101	196	516G3-82382	173
514A1-42041	30	514A5-12701	128	516G2-74101	204	516G3-82392	173
514A1-42041	32	514A5-12701	62	516G2-74201	196	516G3-82402	169
514A1-42041	36	514A5-32341	36	516G2-74201	204	516G3-82402	170
514A1-42191	30	514A5-42031	176	516G2-74301	196	516G3-82402	172
514A1-42191	43	514A5-42051	176	516G2-74301	204	516G3-82521	23
514A1-42191	44	514A5-42141	175	516G2-82001	171	516G3-82801	169
514A2-42601	65	514T2-72061	103	516G2-82001	173	516G3-82801	170
514A2-42611	65	514T7-20201	32	516G2-82011	169	516G3-82801	171
514A2-42621	65	514T7-22061	32	516G2-82021	169	516G3-82801	172
514A2-72411	156	516B6-80302	74	516G2-82031	169	516G3-82801	173
514A2-72411	156	516B6-80302	77	516G2-82051	169	516G3-82811	171
514A2-72411	156	516G0-60011	4	516G2-82061	169	516G3-82821	169
514A2-82012	169	516G0-60101	3	516G3-70011	67	516G3-82821	171
514A3-02002	171	516G0-62001	4	516G3-70011	69	516G3-82831	169
514A3-04201	200	516G0-62011	3	516G3-70021	67	516G3-82831	171
514A3-04221	200	516G1-32002	31	516G3-70021	69	516G3-82841	171
514A3-72091	25	516G1-32012	31	516G3-74001	182	516G3-82851	171
514A3-82002	169	516G1-42021	135	516G3-74001	188	516G3-82861	171
514A3-82002	170	516G1-42021	136	516G3-82001	171	516G3-82871	171
514A3-82002	171	516G1-42021	136	516G3-82011	169	516G3-82881	171
514A3-82002	172	516G1-42021	137	516G3-82011	171	516G3-82891	173
514A3-82002	173	516G1-42101	27	516G3-82021	171	516G3-82901	173
514A3-82012	169	516G1-42101	29	516G3-82031	171	516G4-60202	143

PARTS NUMBER INDEX

Part No.	Fig.No.	Part No.	Fig.No.	Part No.	Fig.No.	Part No.	Fig.No.
516G4-60302	144	518G0-80201	14	518G7-42031	94	522A2-18231	114
516G4-60402	145	518G0-80211	14	518H3-80251	47	522A2-18241	114
516G5-12511	106	518G0-82001	16	518H3-82001	169	522A2-18251	114
516G5-13051	101	518G0-90111	102	518H3-82001	171	522A2-18261	114
516G5-13151	101	518G1-61301	194	518H3-82011	169	522A2-18271	114
516G5-13511	106	518G1-61401	194	518H3-82011	171	522A2-18281	114
516G5-13511	106	518G1-61501	202	518H3-82021	171	522A2-18291	114
516G6-12051	37	518G1-61601	202	518H3-82031	171	522A2-18301	114
516G6-20101	17	518G1-70001	14	518H3-82041	171	522A2-18311	114
516G6-20201	17	518G2-32001	46	518H3-82051	171	522A2-18321	114
516G6-22011	45	518G2-32041	46	518H3-82061	171	522A2-18331	114
516G6-22031	17	518G2-60201	101	518H3-82071	171	522A2-18341	114
516G6-22031	17	518G2-60211	101	518H3-82081	173	522A2-18352	114
516G6-22031	18	518G2-70101	1	518H3-82091	173	522A2-18361	114
516G6-22031	18	518G2-72121	23	518M6-52001	8	522A2-18371	114
516G6-22051	17	518G2-80231	100	518M6-60301	8	522A2-18381	114
516G6-22051	17	518G2-82181	169	518N6-60301	8	522A2-18391	114
516G6-22051	18	518G2-82181	170	519G0-80201	15	522A2-18401	114
516G6-22051	18	518G2-82181	171	519G0-80211	15	522A2-18541	114
516G6-80171	81	518G2-82181	172	519G0-80221	15	522A2-18551	114
516G6-80271	93	518G2-82181	173	519G1-70001	15	522A2-18561	114
516G6-85001	93	518G2-82281	169	519G1-70011	15	522A2-18571	114
516G6-85011	81	518G3-70201	138	519G6-52001	9	522A2-18581	114
516G6-85011	82	518G3-70211	138	519G6-52051	11	522A2-18591	114
516G6-90401	135	518G3-72301	138	519G6-52151	11	522A2-42001	24
516G6-92001	40	518G3-91201	190	519M6-60301	9	522A2-72111	169
516G6-92011	40	518G3-91211	190	519N6-60301	9	522A2-72111	170
516G6-92022	40	518G3-91221	190	520F7-22001	34	522A2-72111	171
516G6-92031	40	518G3-91231	190	521A2-42001	23	522A2-72111	172
516G6-92121	40	518G3-91241	190	521A2-42001	24	522A2-72111	173
516G6-92151	40	518G3-91251	190	521A2-42061	39	522A2-82151	169
516G6-92201	40	518G3-91261	190	52197-40002	83	522A3-82441	167
516G6-92211	40	518G3-91271	190	52197-42001	83	522A3-82641	167
516G7-22001	33	518G3-91281	190	522A1-10201	4	522A3-82841	167
516G7-50101	38	518G3-91291	190	522A1-42051	27	522A3-83021	171
516G7-50201	136	518G3-91301	190	522A1-42051	28	522A3-83041	167
516G7-50201	136	518G3-91311	190	522A1-42051	29	522A3-83061	171
516G7-50211	137	518G3-91321	190	522A1-42061	27	522A3-83081	171
516G7-50301	38	518G3-91331	190	522A1-42061	28	522A3-83221	171
516G7-50401	135	518G3-91341	190	522A1-42061	29	522A3-83241	167
516G7-52011	59	518G3-91351	190	522A2-10401	114	522A3-83281	171
516G8-92001	30	518G3-91361	190	522A2-11601	114	522A3-83421	171
516G9-10101	35	518G3-91371	190	522A2-18011	114	522A3-83441	167
516G9-12011	35	518G3-91381	190	522A2-18021	114	522A3-83461	171
516G9-92101	26	518G3-91401	197	522A2-18031	114	522A3-83481	171
516H8-80101	17	518G3-91411	197	522A2-18041	114	522A3-83621	171
516K6-80171	82	518G3-91421	197	522A2-18051	114	522A3-83641	167
516M5-12301	106	518G3-91431	197	522A2-18061	114	522A3-83661	171
516M5-12311	106	518G3-91441	197	522A2-18071	114	522A3-83681	171
516M5-12311	106	518G3-91451	197	522A2-18081	114	522A3-83821	171
517G6-20101	18	518G3-91461	197	522A2-18091	114	522A3-83841	167
517G6-20201	18	518G3-91471	197	522A2-18101	114	522A3-83861	171
517H3-82221	9	518G3-91481	197	522A2-18111	114	522A3-83881	171
517H8-80101	18	518G3-91491	197	522A2-18121	114	522A7-12211	23
518G0-52501	130	518G3-91501	197	522A2-18131	114	522A7-22011	33
518G0-52511	130	518G4-60501	146	522A2-18161	114	522A7-22011	34
518G0-52521	130	518G7-40701	83	522A2-18171	114	522B0-92021	7
518G0-52531	130	518G7-42001	94	522A2-18201	114	522B0-92031	7
518G0-52541	130	518G7-42011	94	522A2-18211	114	522B0-92041	7
518G0-52601	130	518G7-42021	94	522A2-18221	114	522B0-92051	7

PARTS NUMBER INDEX

Part No.	Fig.No.	Part No.	Fig.No.	Part No.	Fig.No.	Part No.	Fig.No.
524G2-10502	48	534A0-82101	16	534A7-50601	43	53675-55051	189
524G2-12151	114	534A2-74051	196	534A7-50601	44	537A0-52001	124
524T1-72031	16	534A2-74051	204	534A7-52301	41	537A0-80301	16
524T3-84031	202	534A2-74301	196	534A7-52401	41	537A3-72021	23
524W2-42651	65	534A2-74301	204	534A7-52501	41	537B3-72021	23
524W5-12091	102	534A3-82311	169	534A7-72001	21	538A3-72021	24
524W5-12091	103	534A3-82311	170	534A7-72001	22	538B3-72021	24
524W5-13351	105	534A3-82311	171	534A9-22001	104	538G3-82201	24
52516-80302	87	534A3-82311	172	534A9-22011	104	539A1-32001	105
52516-80302	89	534A3-82311	173	534A9-22101	104	539A1-42201	27
52516-80302	91	534A3-82321	171	534A9-22211	25	539A1-42201	28
52516-80302	93	534A3-82331	169	534A9-22301	104	539A1-42201	29
52576-80502	75	534A3-82331	171	534A9-92131	26	539A2-42001	65
52576-80702	75	534A3-82341	169	535C2-60401	129	539A2-42011	65
52576-80902	72	534A3-82341	171	535E3-82211	171	539A2-60111	103
52576-80902	72	534A3-82351	171	535E3-82211	173	539A2-60221	103
52576-80902	75	534A3-82361	171	535H3-82261	120	539A2-60231	100
52576-80902	75	534A3-82371	171	535H3-82411	171	539A2-60301	62
52577-52001	84	534A3-82381	171	535H3-82411	173	539A2-60601	128
52672-72122	169	534A3-82391	171	535H3-82421	171	539A2-62301	62
52672-72122	170	534A3-82401	173	535H3-82431	171	539A2-62321	62
52672-72122	171	534A3-82411	173	535H3-82441	171	539A2-72121	24
52672-72122	172	534A3-82421	169	535H3-82451	171	539A2-80111	103
52672-72122	173	534A3-82421	170	535H3-82461	171	539A2-80221	103
52672-82062	169	534A3-82421	171	535H3-82471	171	539A2-82251	103
52672-82073	169	534A3-82421	172	535H3-82481	171	539A2-90201	99
528F3-82021	173	534A3-82421	173	535H3-82491	171	539A2-90301	100
528F3-82031	173	534A3-82431	171	535H3-82501	173	539A2-90401	100
529F1-42201	30	534A3-82441	169	535H3-82511	173	539A3-72151	17
529F1-42251	30	534A3-82441	171	536A5-40002	175	539A3-72151	18
529F1-42251	43	534A3-82451	169	536A5-40102	175	539A5-00111	102
529F1-42251	44	534A3-82451	171	536A5-42052	175	539A5-00121	102
529F2-42611	65	534A3-82461	171	536G2-82021	169	539A5-00401	99
529F3-70401	152	534A3-82471	171	536G3-82201	23	539A5-10501	106
529F3-70411	153	534A3-82481	171	53651-12551	3	539A5-12001	106
529F3-70411	154	534A3-82491	171	53651-12551	4	539A5-12001	106
529F3-70421	155	534A3-82501	171	53652-82011	169	539A5-12011	104
529F3-82041	173	534A3-82511	173	53652-82011	171	539A5-12041	104
529F3-82051	173	534A3-82521	173	53652-82352	169	539A5-40002	175
529F3-82061	173	534A3-82531	169	53652-82352	171	539A5-40102	175
529F3-82071	173	534A4-22001	104	53652-82401	169	539A5-42052	175
529F3-82081	167	534A4-22011	104	53652-82401	171	539A6-22001	45
529F3-82091	167	534A4-22101	104	53652-82541	169	539A6-22011	45
529F3-82101	167	534A5-00401	106	53652-82551	169	539A6-22021	23
529F3-82101	202	534A5-00411	106	53658-43001	192	539A6-22021	24
529F3-82111	167	534A5-12321	105	53658-43001	200	539A7-22011	32
529F3-82111	202	534A5-12331	105	53658-43011	192	539A7-22061	32
529F3-82161	173	534A5-12571	106	53658-43011	200	539A7-22511	32
529F3-82171	173	534A5-32311	140	53658-43021	192	539A7-52001	42
529F3-82242	173	534A5-42201	176	53658-43021	200	539A7-52001	43
529F3-82252	173	534A7-02001	24	53658-43031	192	539A7-52001	44
529F5-42041	175	534A7-22101	32	53658-43031	200	539A7-52031	42
529F5-42061	175	534A7-22201	33	53658-43041	192	539A7-52031	43
529F7-22001	34	534A7-22201	34	53658-43041	200	539A7-52031	44
529F7-52241	42	534A7-22211	33	53671-92821	175	539A7-52041	41
529F7-52241	44	534A7-22211	34	53675-54101	183	539A7-52101	43
530C3-82361	24	534A7-50301	41	53675-54101	189	539A7-52101	44
53130-12091	34	534A7-50401	41	53675-55051	157	539A7-52311	41
532B3-82201	8	534A7-50501	41	53675-55051	158	539A7-52411	41
533A0-52051	26	534A7-50601	42	53675-55051	183	539A7-52511	41

PARTS NUMBER INDEX

Part No.	Fig.No.	Part No.	Fig.No.	Part No.	Fig.No.	Part No.	Fig.No.
539A7-72001	19	54236-81301	89	54238-40301	199	57393-02041	191
539A7-72001	20	54236-81501	90	54238-40311	191	57393-02041	199
539A8-22101	36	54236-81521	92	54238-40311	199	57393-72041	67
539A8-22151	36	54236-81531	90	54238-40321	191	57393-72041	68
539A8-92111	27	54236-81541	88	54238-40321	199	57393-72041	68
539A8-92111	28	54236-81541	90	54238-40331	191	57393-72041	69
539A8-92111	29	54236-81551	90	54238-40331	199	57393-72251	67
539A8-92111	30	54236-81601	88	54238-40341	191	57393-72251	68
539A9-02001	35	54236-81601	90	54238-40341	199	57393-72251	68
539A9-02011	35	54236-81601	90	54238-40351	191	57393-72251	68
539A9-32001	106	54236-81601	92	54238-40351	199	57393-72251	68
539A9-62001	177	54236-83011	73	54238-40361	199	57393-72251	69
539A9-92001	21	54236-83011	74	54238-42011	191	57393-72262	67
539A9-92001	22	54236-83011	76	54238-42011	199	57393-72262	68
539B2-32201	17	54236-83011	77	54276-80201	79	57393-72262	68
539B2-32201	18	54236-83011	79	54276-80301	76	57393-72262	68
539B2-60201	110	54236-83011	80	54276-80401	73	57393-72262	68
539B3-72151	17	54236-83011	82	54276-80401	76	57393-72262	69
539B3-72151	18	54236-83011	85	54276-80501	76	577H3-70101	67
539B3-72201	17	54236-83011	85	54612-42021	3	577H3-70101	69
539B3-72201	18	54236-83011	86	55535-42101	175	577H3-72001	67
539B3-82301	17	54236-83011	86	55535-42141	175	577H3-72001	69
539B3-82301	18	54236-83021	73	55535-42161	175	577H3-72021	67
539B6-92211	40	54236-83021	74	55592-82001	169	577H3-72021	69
539C0-90051	103	54236-83021	76	55592-82001	170	577H3-72181	138
539C0-90061	103	54236-83021	77	55592-82001	171	59595-55301	96
539G3-72001	122	54236-83021	79	55592-82001	172	61170-10051	190
54023-72081	71	54236-83021	80	55592-82001	173	618G0-10051	190
54236-80101	77	54236-83021	82	55593-02371	155	618G0-10051	198
54236-80101	77	54236-83021	85	55593-62551	193	62050-12331	197
54236-80121	80	54236-83021	85	55595-43632	176	62150-14321	201
54236-80131	77	54236-83021	86	55597-22111	33	62459-23371	198
54236-80141	74	54236-83021	86	55597-22111	34	63110-18921	202
54236-80141	74	54236-83031	73	55792-52601	41	63130-15301	197
54236-80141	77	54236-83031	74	55792-52611	41	63130-25614	143
54236-80141	77	54236-83031	76	55792-52621	41	63130-25614	144
54236-80151	77	54236-83031	77	55792-52641	41	63130-25614	145
54236-80181	74	54236-83031	79	558A9-92001	26	63130-25614	146
54236-80181	77	54236-83031	80	558A9-92001	42	636A0-10011	190
54236-80181	77	54236-83031	82	558A9-92001	44	639A0-10011	198
54236-80181	80	54236-83031	85	55812-42011	36	80110-00628	65
54236-80201	84	54236-83031	85	55953-02032	171	80430-00006	65
54236-80251	83	54236-83031	86	56110-63521	33	81160-00025	96
54236-80301	85	54236-83031	86	56110-63521	34	89140-00006	114
54236-80311	85	54236-83081	88	56600-59121	176	89140-00006	65
54236-80501	86	54236-83081	90	57023-72011	67	89140-00006	65
54236-80511	86	54236-83081	92	57023-72011	68	89140-00006	65
54236-80601	85	54236-83091	88	57023-72011	68	89140-00006	65
54236-80611	85	54236-83091	90	57023-72011	68	90789-40100	191
54236-80701	85	54236-83091	92	57023-72011	68	90789-40100	199
54236-80711	85	54236-83101	88	57023-72011	69	90789-40100	200
54236-80801	85	54236-83101	90	57042-72091	31		
54236-80811	85	54236-83101	92	57045-52151	71		
54236-81001	85	54237-42042	59	57045-52151	71		
54236-81001	86	54237-42061	59	571A3-82361	169		
54236-81011	85	54237-42072	59	571A3-82361	170		
54236-81011	86	54237-43001	59	571A3-82361	171		
54236-81101	89	54237-43011	59	571A3-82361	172		
54236-81201	87	54237-43021	71	571A3-82361	173		
54236-81201	89	54238-40301	191	571A6-82081	91		

No.PF-18BB
平成13年 12月　発行
平成14年 12月　改訂

TCM株式会社
本　社　大阪市西区京町堀1－15－10
発 行　TCMテクノ株式会社

ISSUED:DECEMBER,2001
REVISED:DECEMBER,2002

TCM CORPORATION
INTERNATIONAL MARKETING DIVISION : 1-15-5, Nishi－shimbashi, Minato－ku, Tokyo
105－0003, Japan
FAX : Japan +81－3－35918152, 3－35918153

無断で転載・複製を禁ず
All rights reserved.

SA－1412001(H)　Printed in Japan

TCM 株式会社